17130163-01
COUCHTISCH

BDSK Handels GmbH & Co.KG
Mergentheimer Straße 59
DE-97084 Würzburg
E-Mail:Info@xxxlutz.at

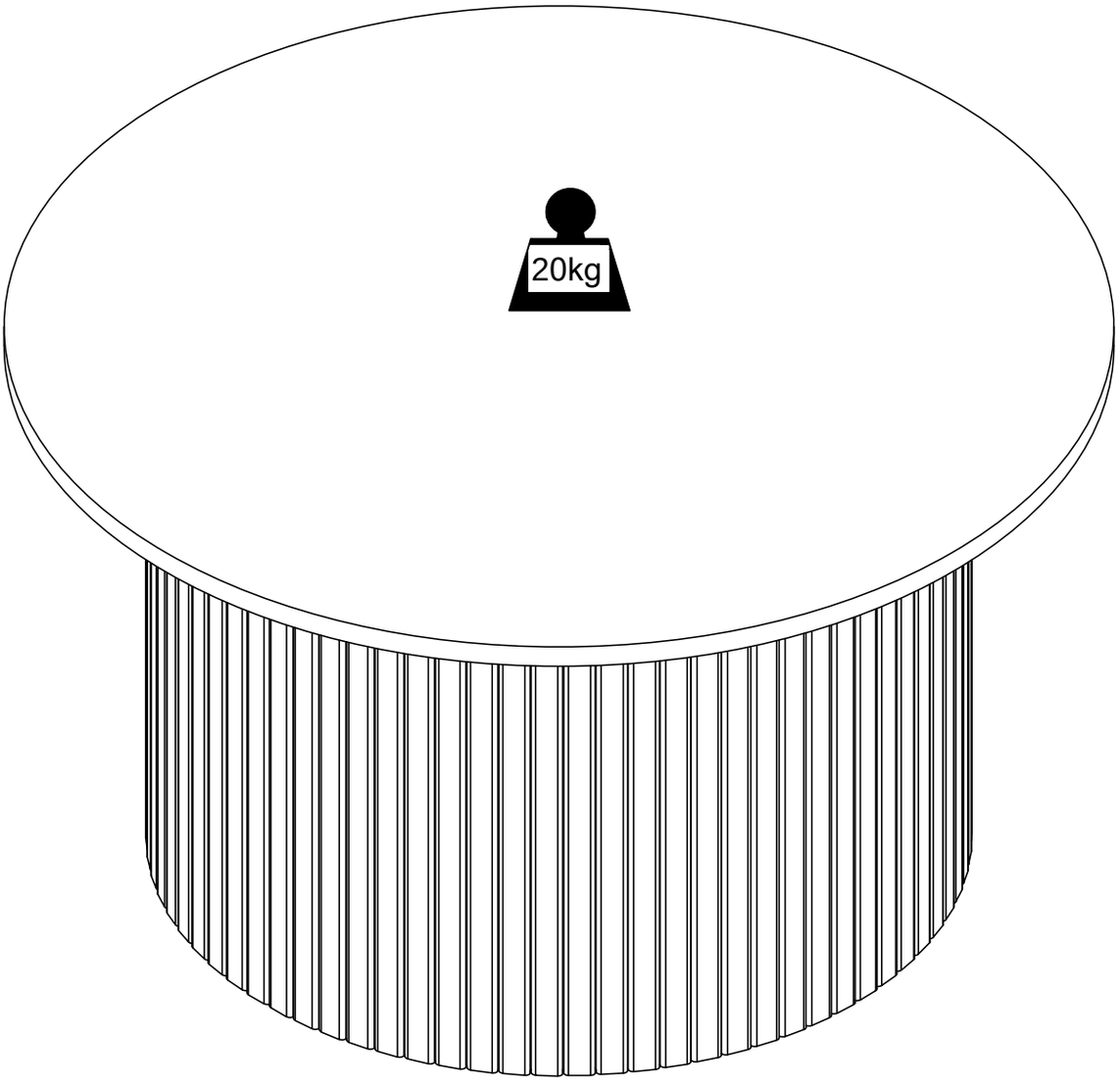

22
PAP

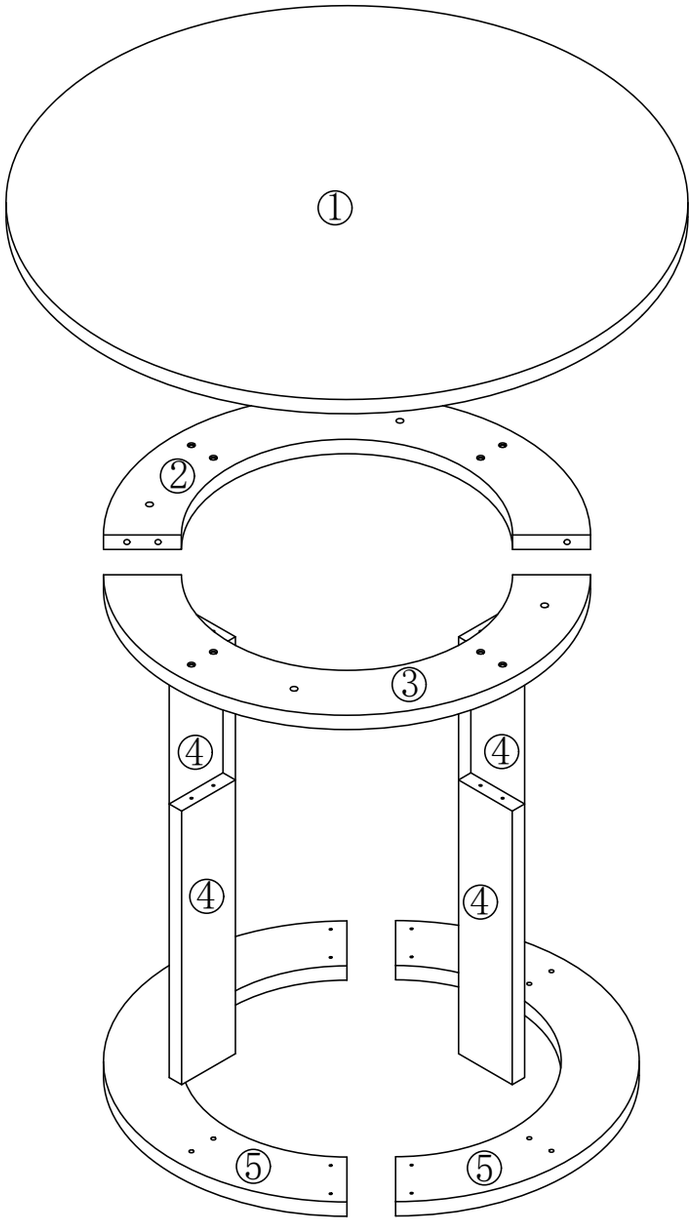

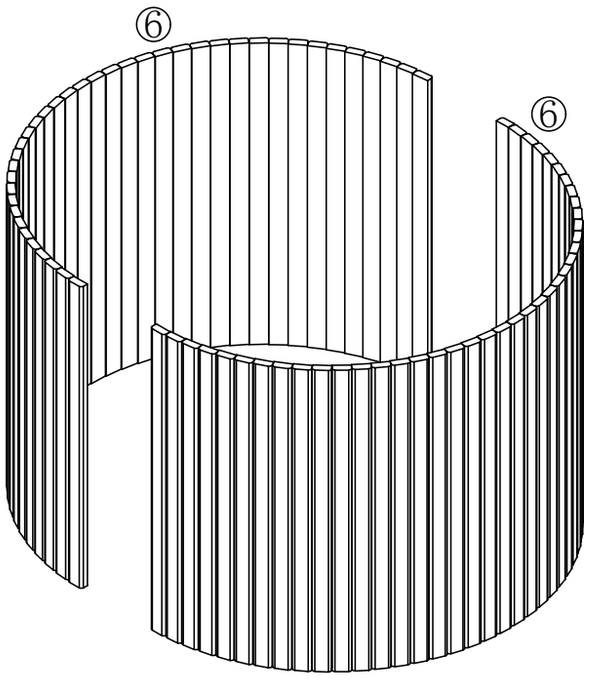

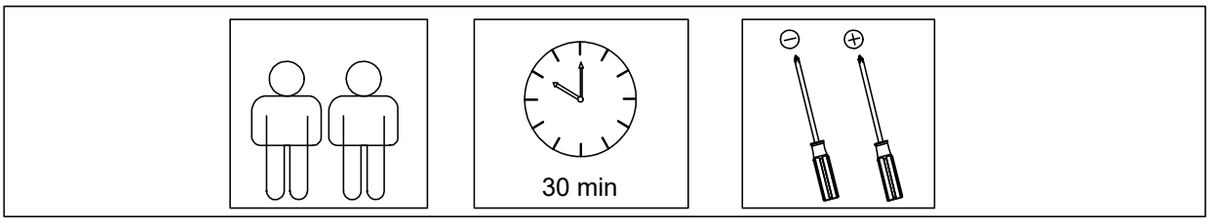

A	×16	B	×16	C	×8	D	×4	E	×1	F	×4	G	×8
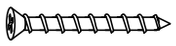				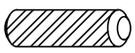				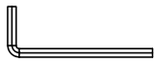					
M4x40MM		M3.5x12MM		Φ6x30		M6x25MM				φ30			

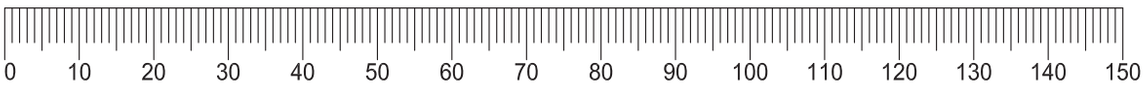

①

C	×8
φ6x30	

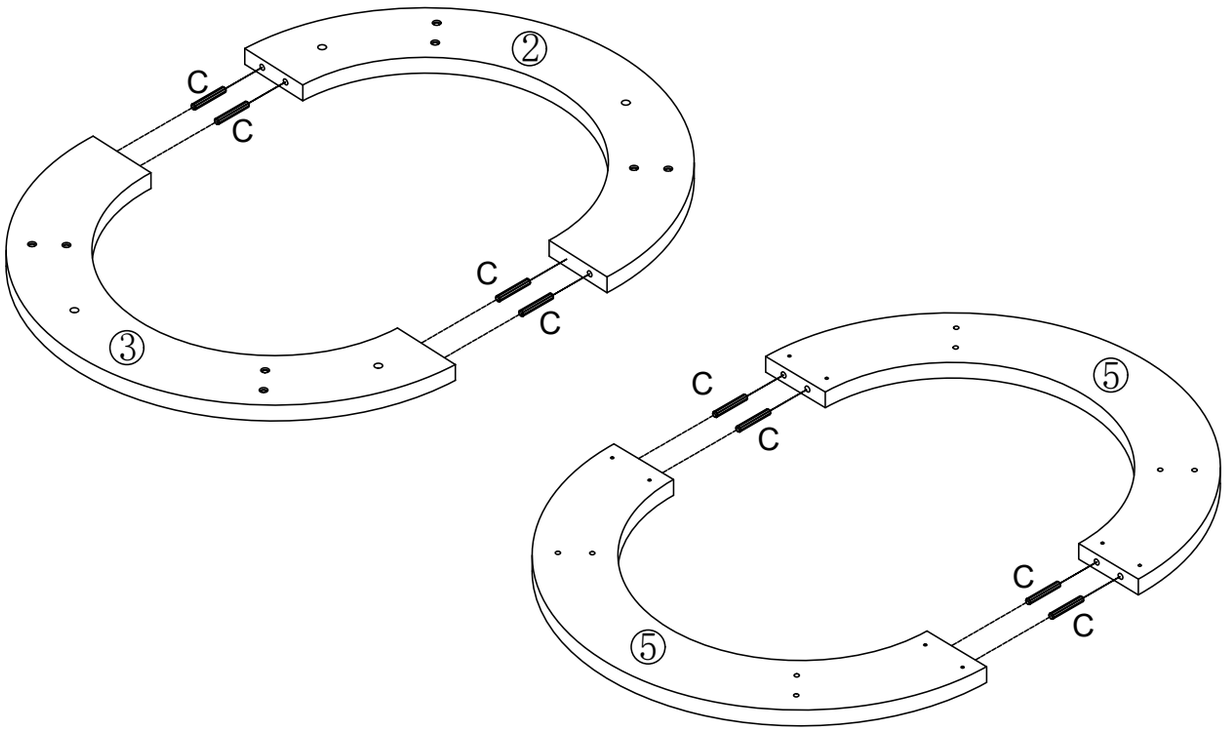

②

B	×16
M3x12MM	

G	×8

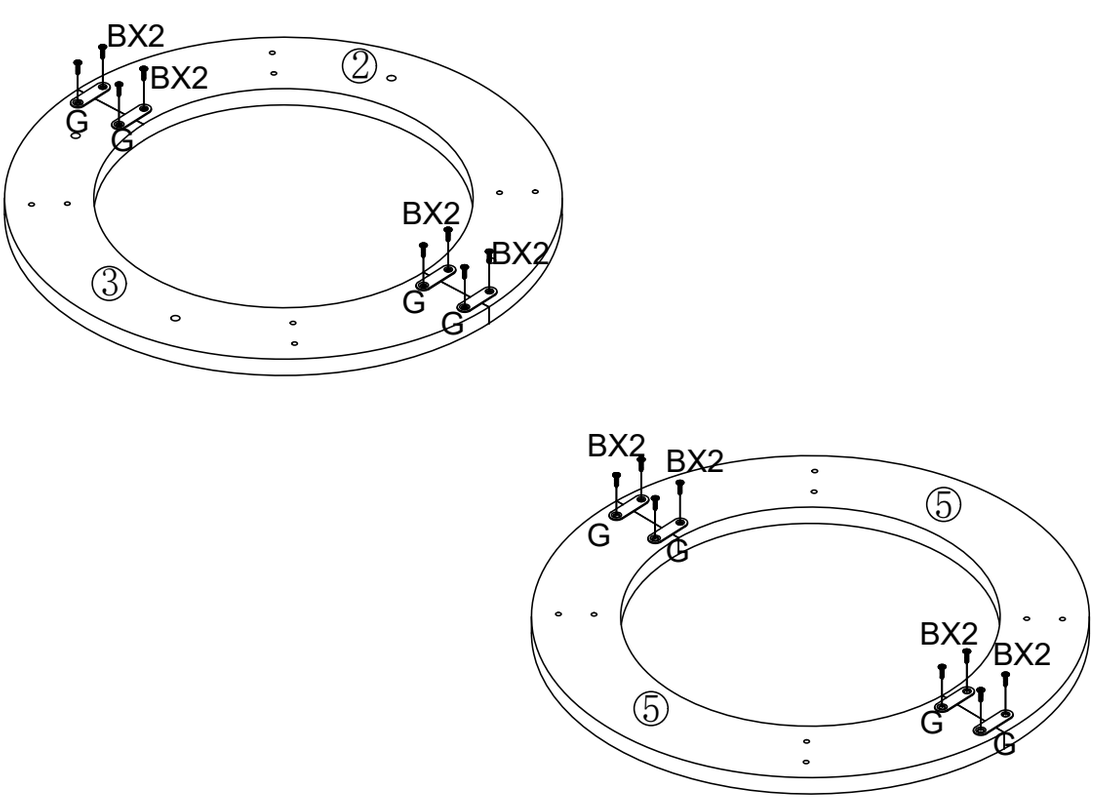

③

A	×8
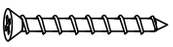 M4x40MM	

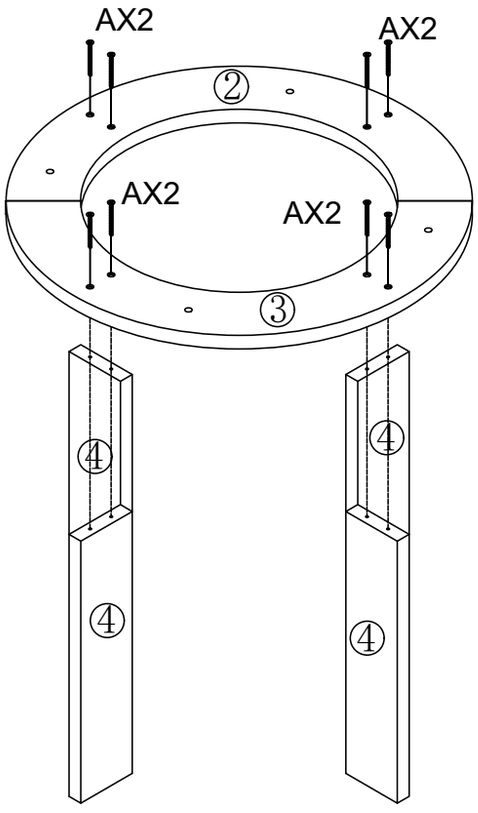

④

A	×8
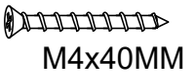 M4x40MM	

F	×4
 φ30	

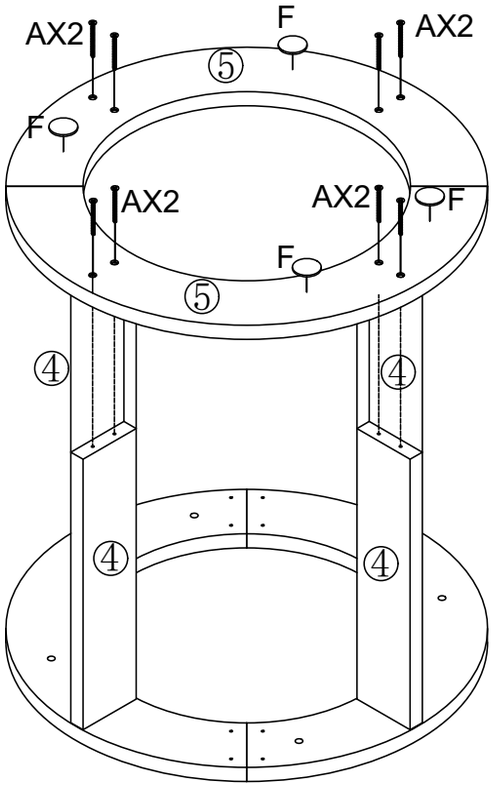

5

D	×4
	
M6x25MM	

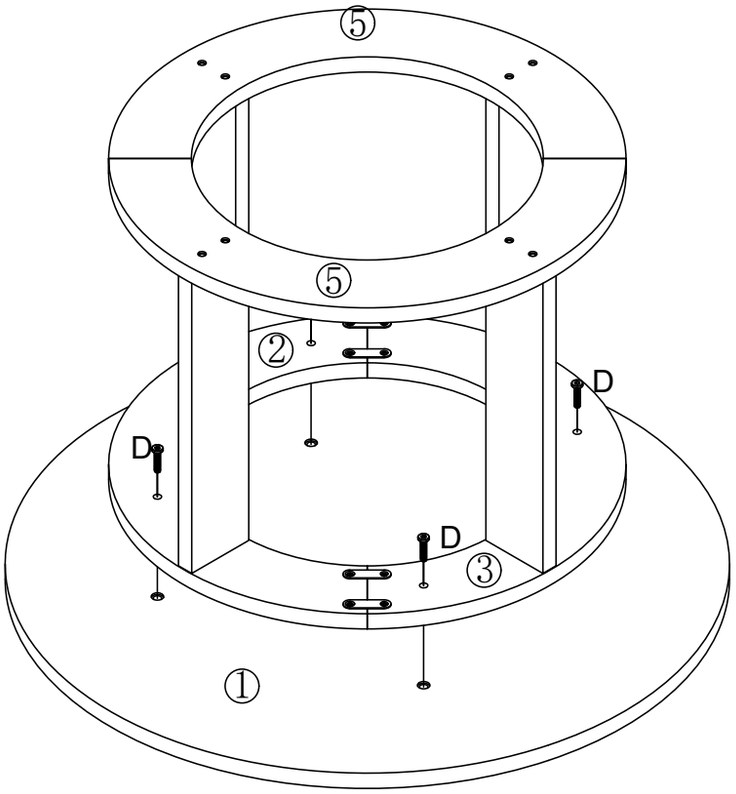

6

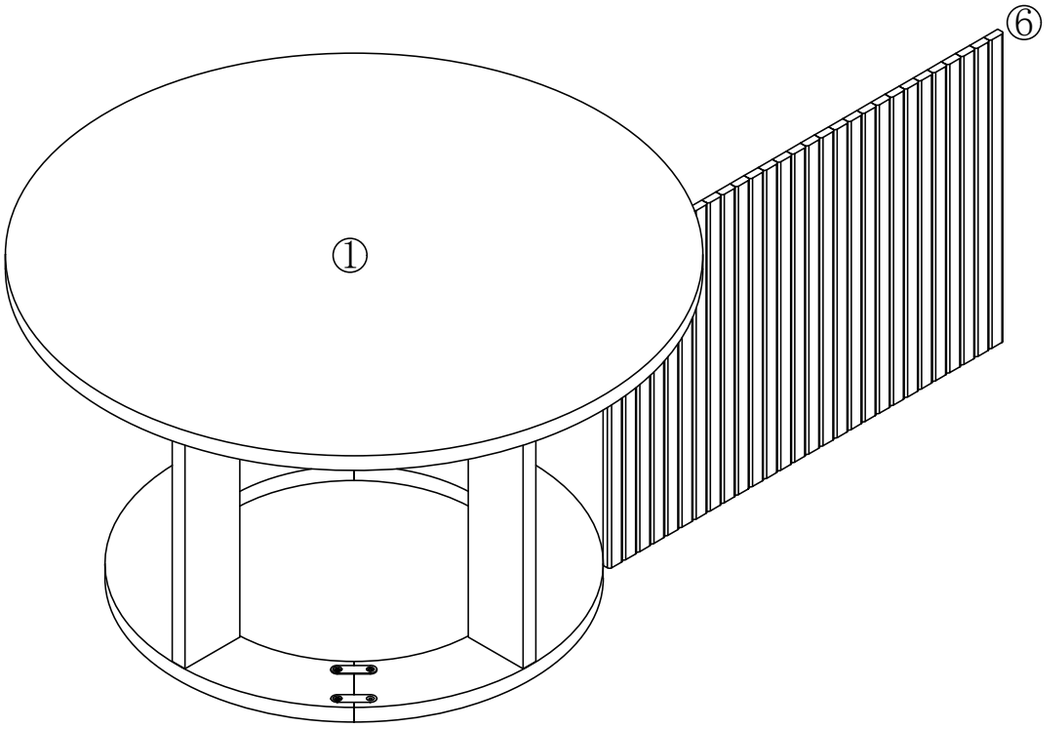

⑦

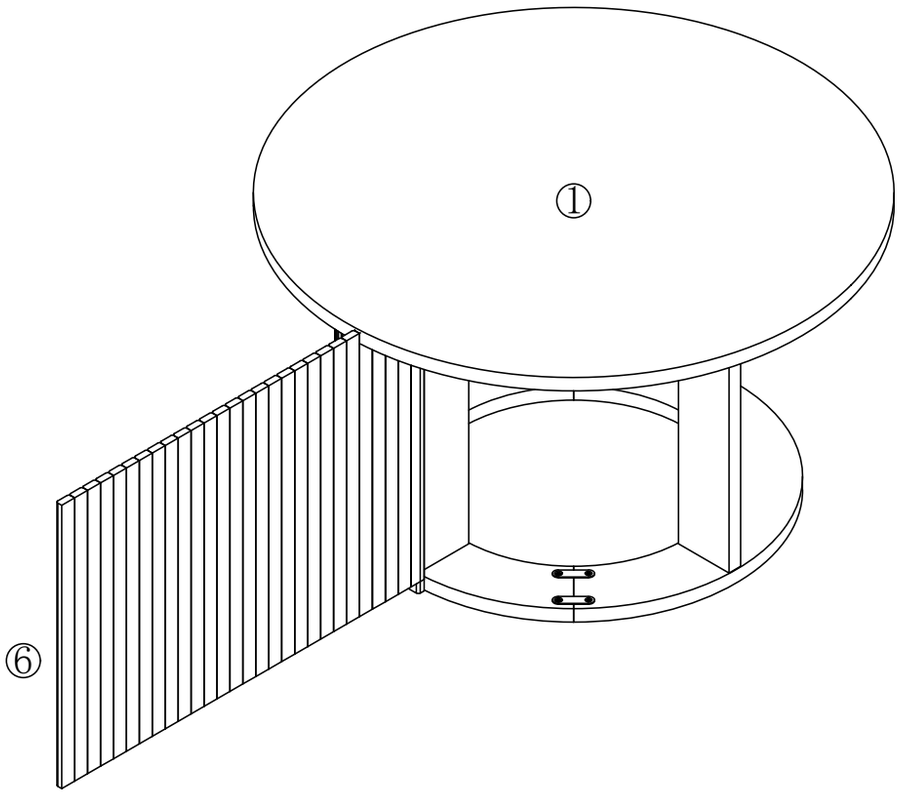

⑧

