MELBOURNE

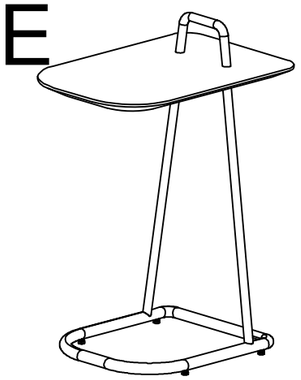

LAPTOP TABLE
ART . NO. - 73929
45X30X60.5CM

ASSEMBLY INSTRUCTIONS

A	B	C	D
2x	4x	4x	1x
M 6X35MM	M 6X20MM	25X8MM	

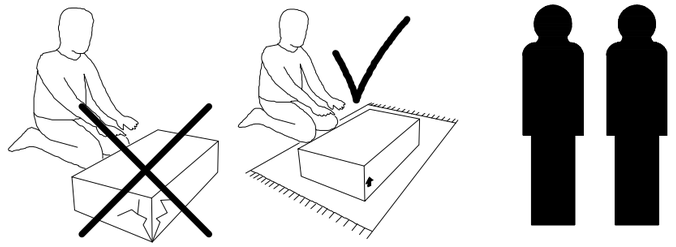

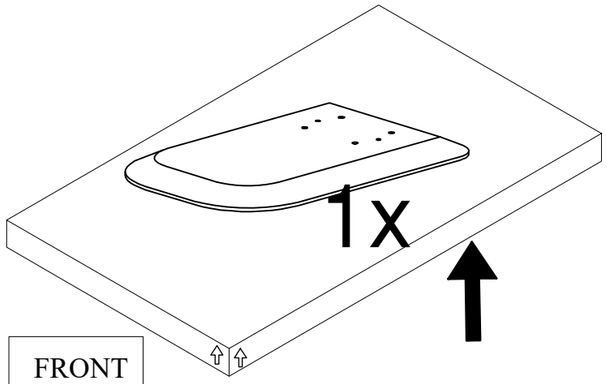

FRONT
1/1

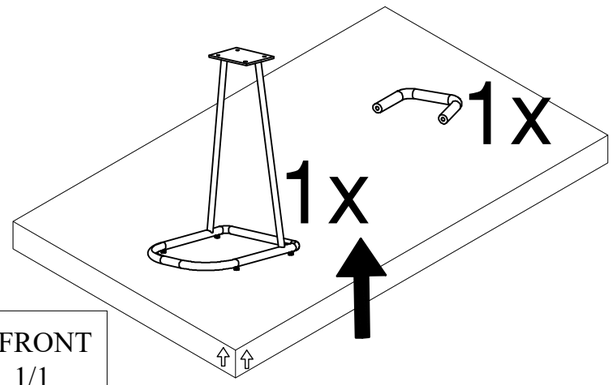

FRONT
1/1

1

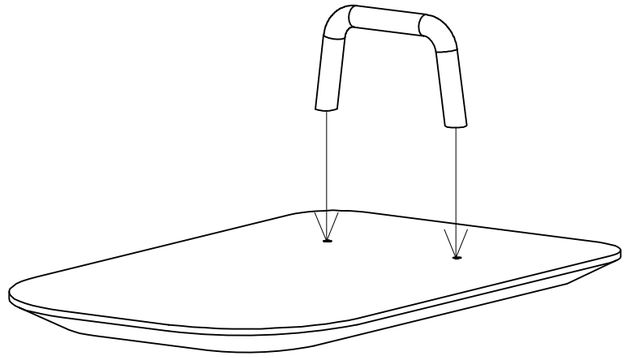

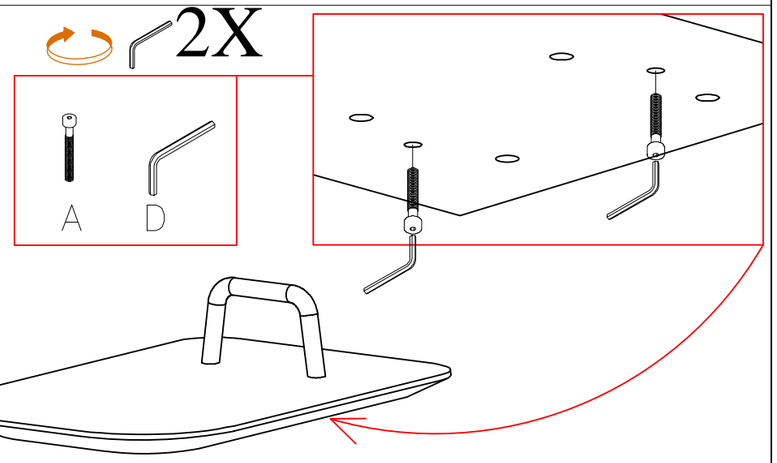

2

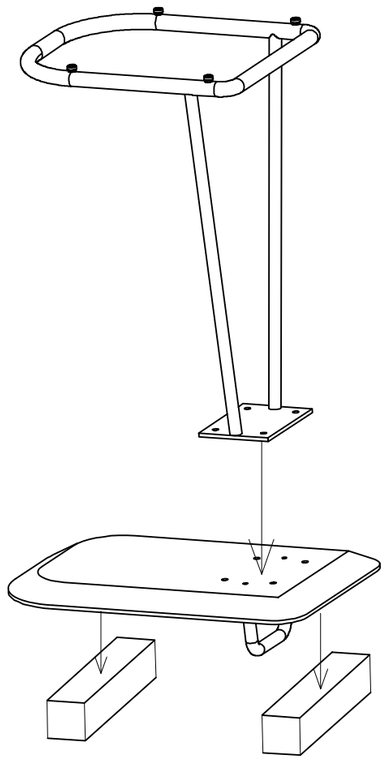

3

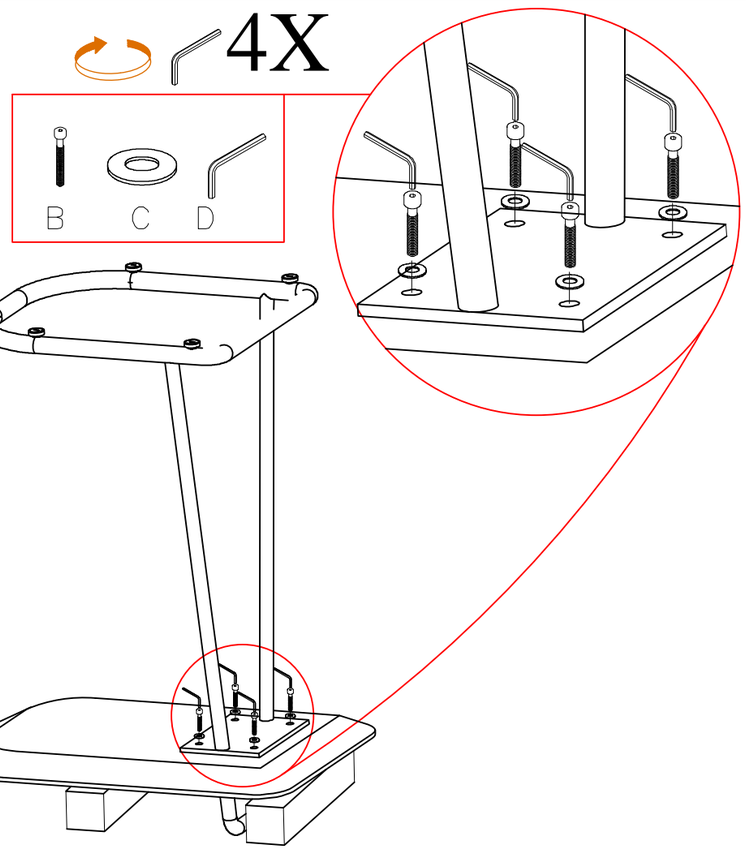

4

