searchlight

11203-1

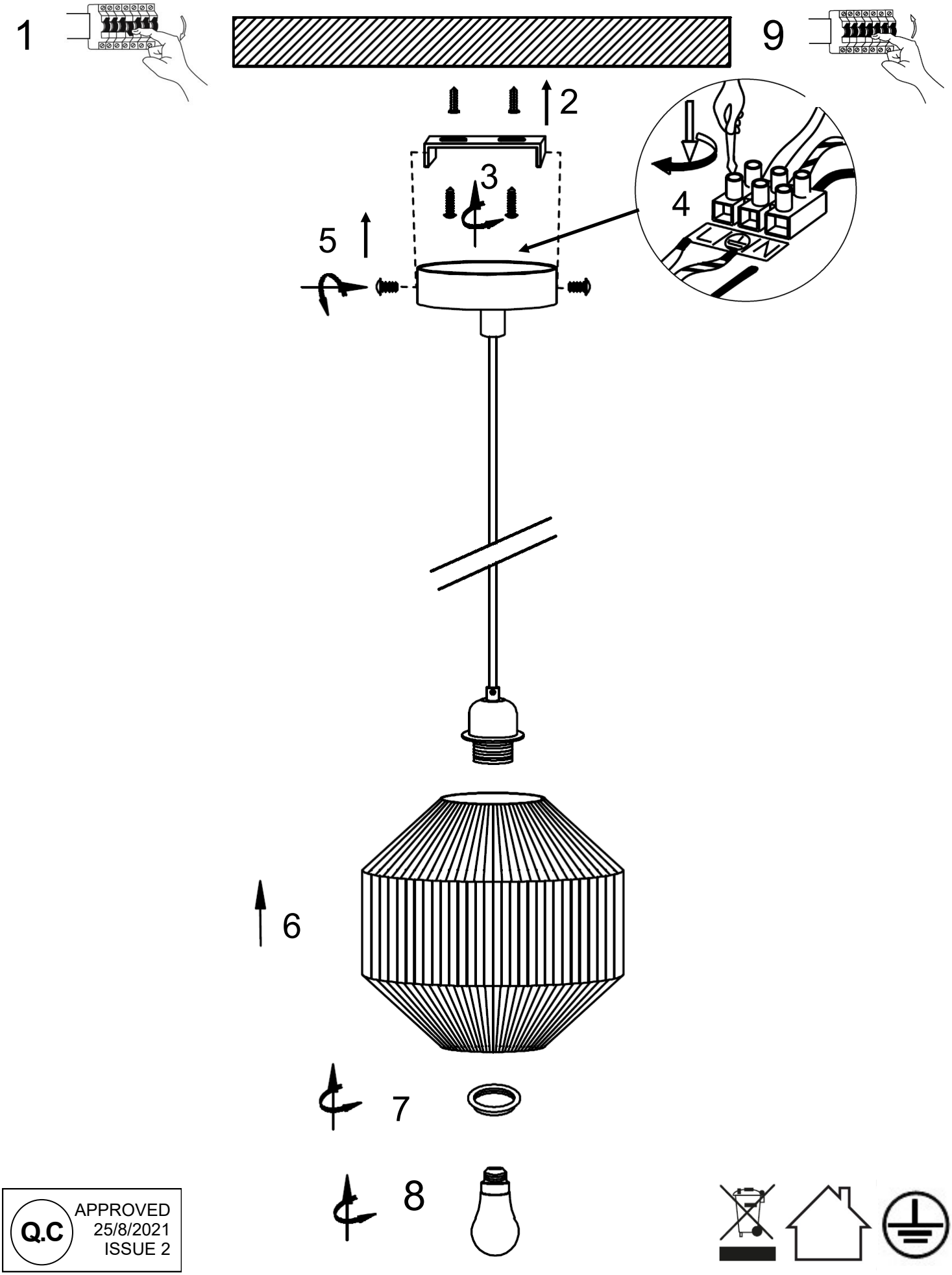

Q.C APPROVED 25/8/2021 ISSUE 2

SAFETY INFORMATION: (Please retain for future reference)

- Always turn off the mains supply before commencing the installation of this fitting .
- This is a Class 1 product and requires a permanent Earth connection
  - 220 (240) Volts-50Hz .
- This product must be installed in accordance with the national building and wiring regulations, if in doubt consult a qualified electrician.
- We do not recommend any modifications of the fitting as this may invalidate the warranty and render the fitting unsafe .
- This fitting is suitable for installation in Indoor locations only .
- Do not mount the fitting in a damp atmosphere.
- Allow the bulbs to cool (10 minutes) before replacing them
- Ensure sufficient access to the fitting to enable safe maintenance

LAMP INFORMATION:

- Do not exceed the maximum rated wattage stated on the lamp holders
- This fitting is suitable for use with normal incandescent or LED lamps.
- This fitting is suitable for dimming , however if the luminaire is fitted with LED lamps they must be a “dimmable “ version

ADDITIONAL INFORMATION:

To Shorten the cable prior to installation follow the below guide:

- Using a small flat head screwdriver loosen the plastic cord grip.
- Carefully push the cable upwards until, the desired height is achieved .
- Pull any excess cable through the bar .
- Remember to re-tighten the plastic cord grip to secure the cable .

The excess cable and terminal block once wired should be placed in the ceiling void .

Alternatively the excess cable can be cut and rewired into the terminal block. **If you wish to cut the excess cable please be aware this would be permanent as the cable cannot be lengthened at a later time. The clear Live and neutral wires should be marked prior to removal from the terminal block . Wrap at least 2 layers of insulation tape around the terminal bock and supply wiring after rewiring has been completed. Always consult a qualified electrician if in doubt.**

AFTERCARE AND MAINTENANCE:

- Always disconnect power supply when servicing or cleaning.
- Clean only with a dry or slightly damp cloth.
- Do no use any abrasive cloths or cleaners as this may damage the product