CAMRON / BENTON Vitrine 1T

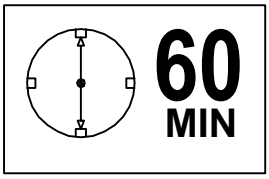

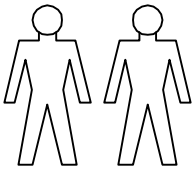

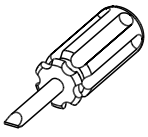

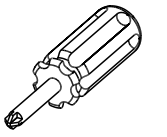

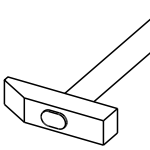

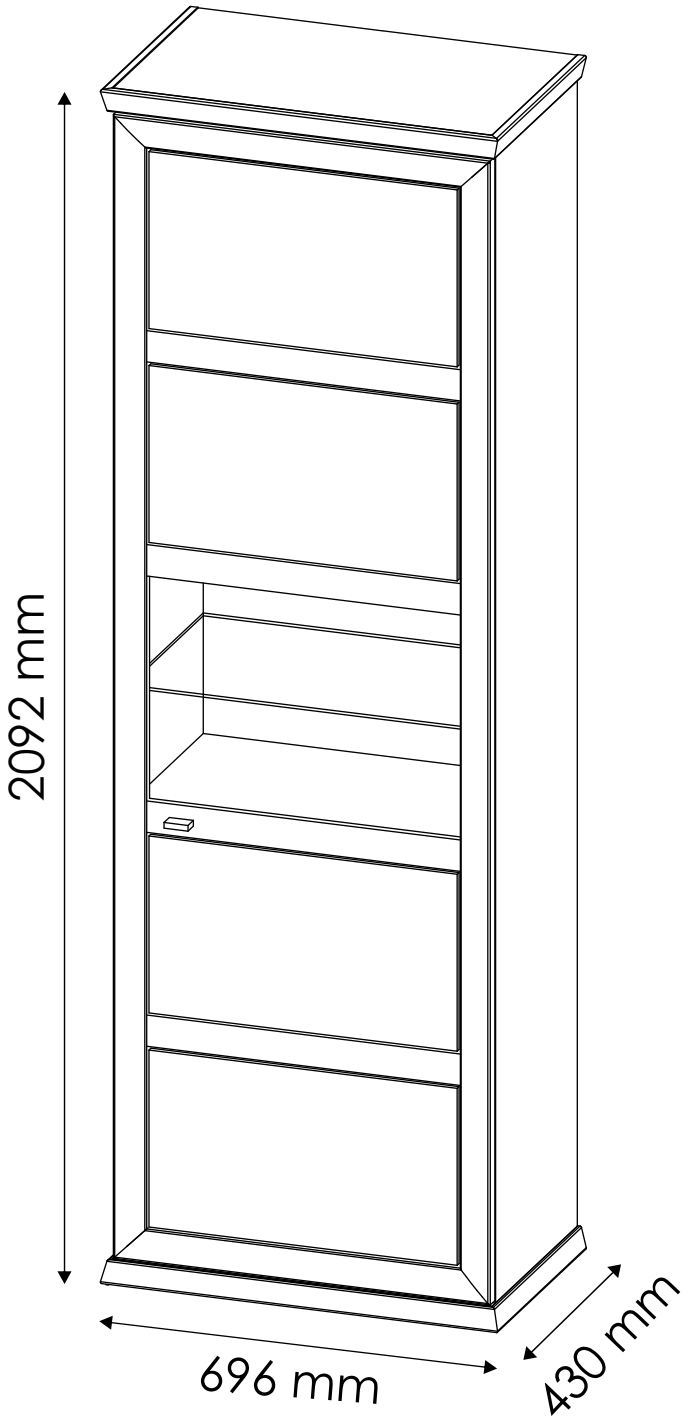

R

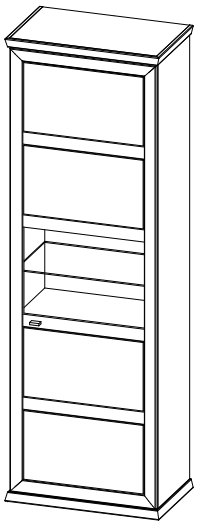

L

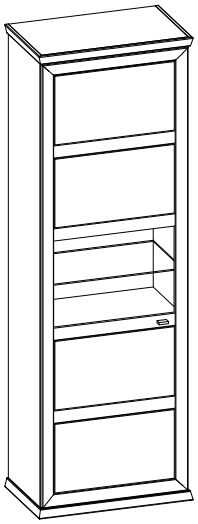

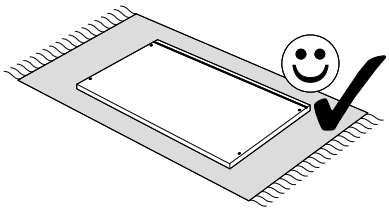

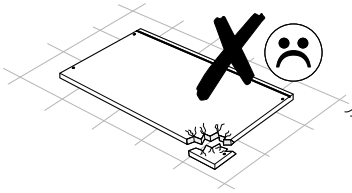

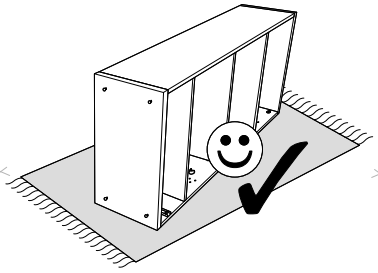

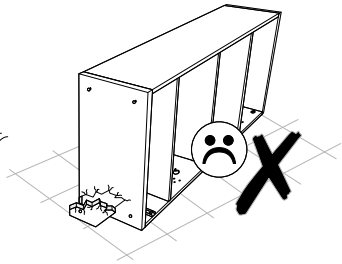

B3 d8 x1	C0 x16	C2 x16
D0 3 x 15 mm x28	D10 4 x 16 mm x8	D21 5 x 13 mm x1
E0 5 x 50 mm x1 8 x 50 mm	H2 4 x 22 mm x2	J3 x4
J10 x4	L6 x1	M1 x28
P0 x1	Q1 x4	Q3 x8
U2 x4	LOGO... x1	U3* x2 *MODEL CAMRON

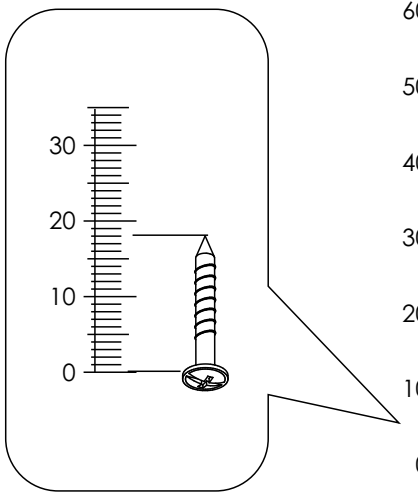

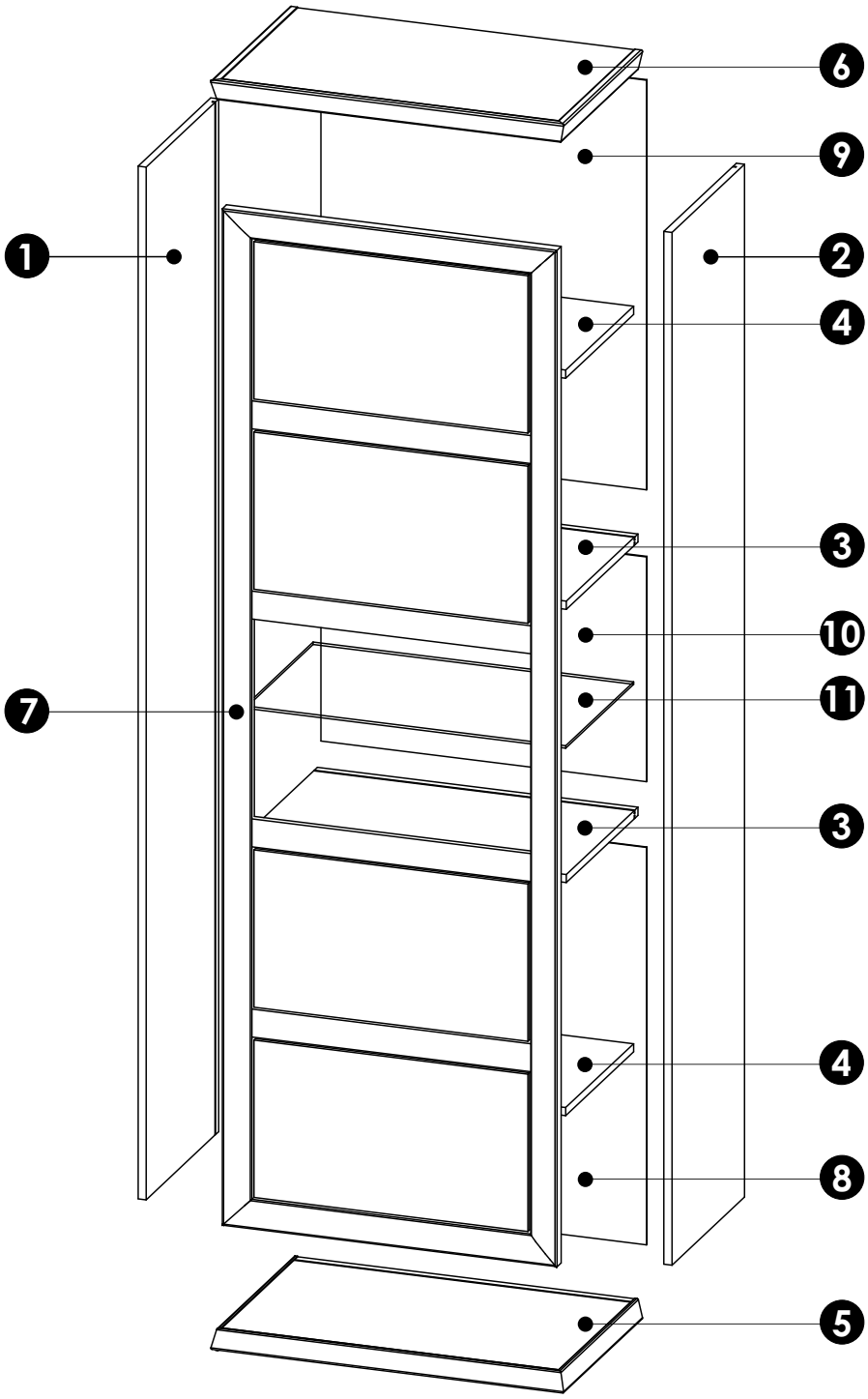

1	2036	393	16	x1	1/3
2	2036	393	16	x1	1/3
3	632	388	16	x2	1/3
4	632	368	16	x2	1/3
5	696	430	40	x1	2/3
6	696	430	40	x1	2/3
7	2004	660	25	x1	3/3
8	642	786	2,8	x1	3/3
9	642	804	2,8	x1	3/3
10	642	443	2,8	x1	3/3
11	631	358	5	x1	1/3
					1/3

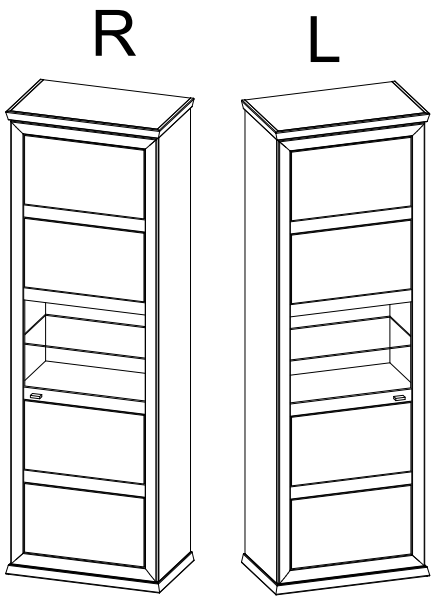

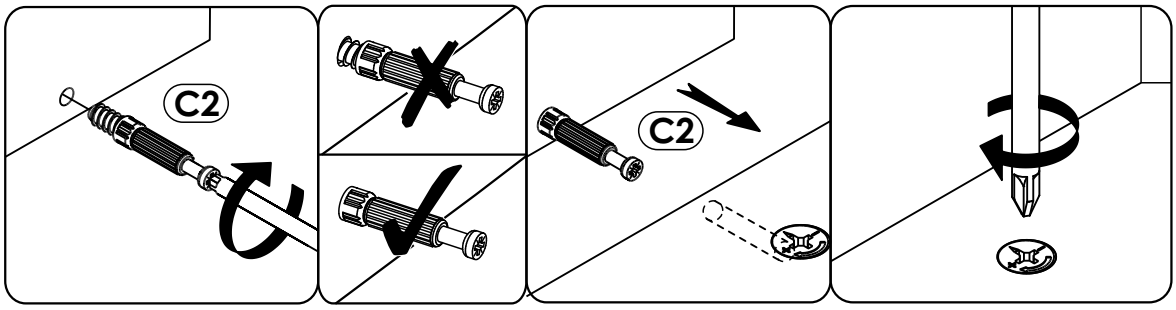

1

C2 x4	D21 5 x 13 mm x1	P0 x1
		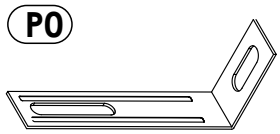

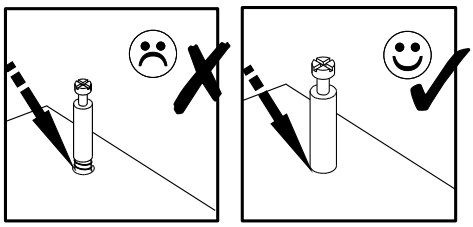

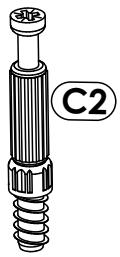

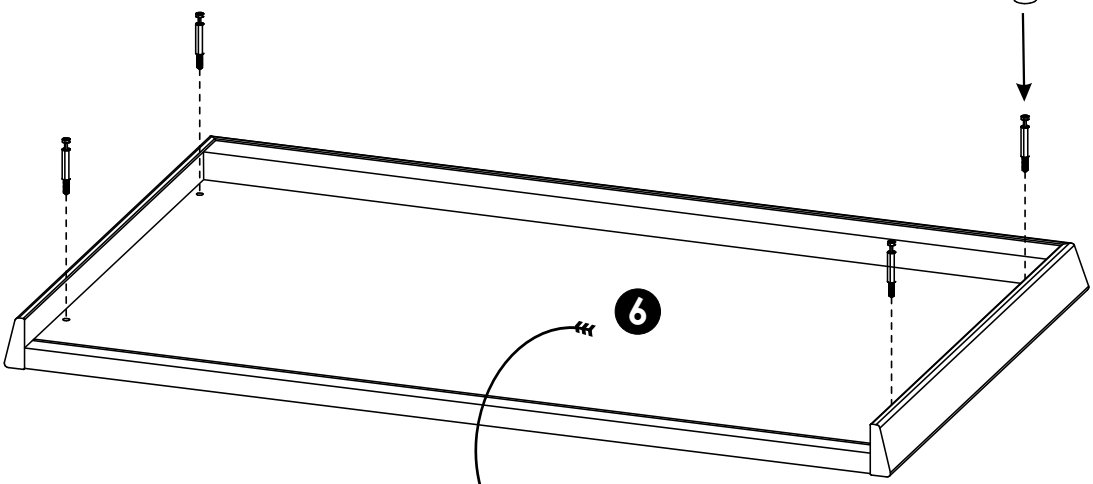

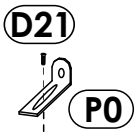

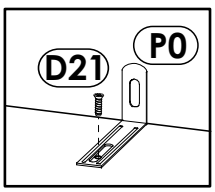

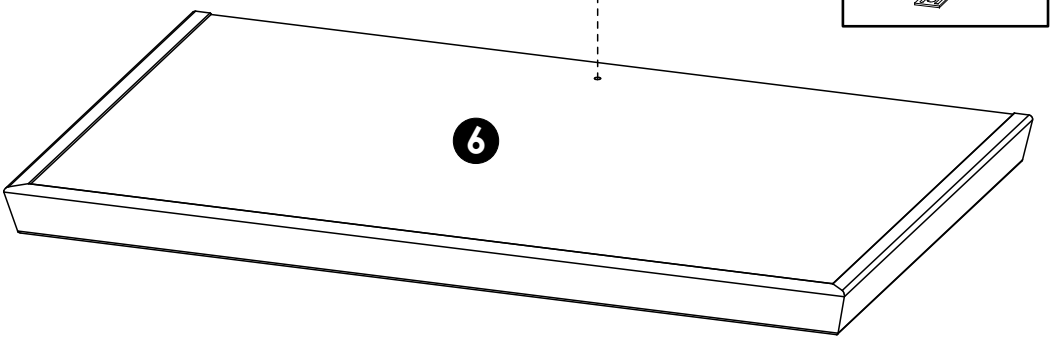

2

C2 x4	U2 x4

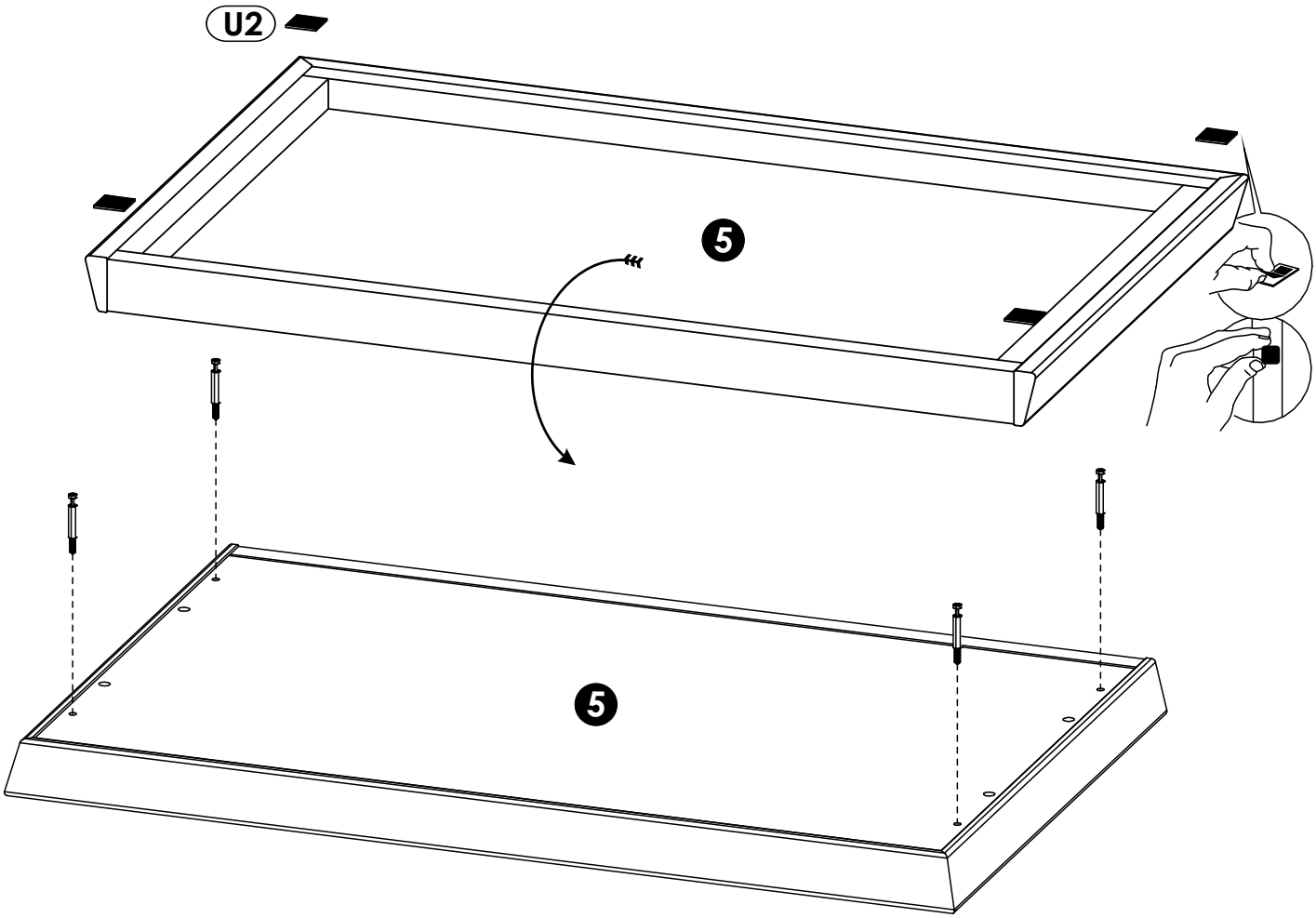

C2 x8	J3 x4	Q1 x4
	Q3 x8	

3R▶

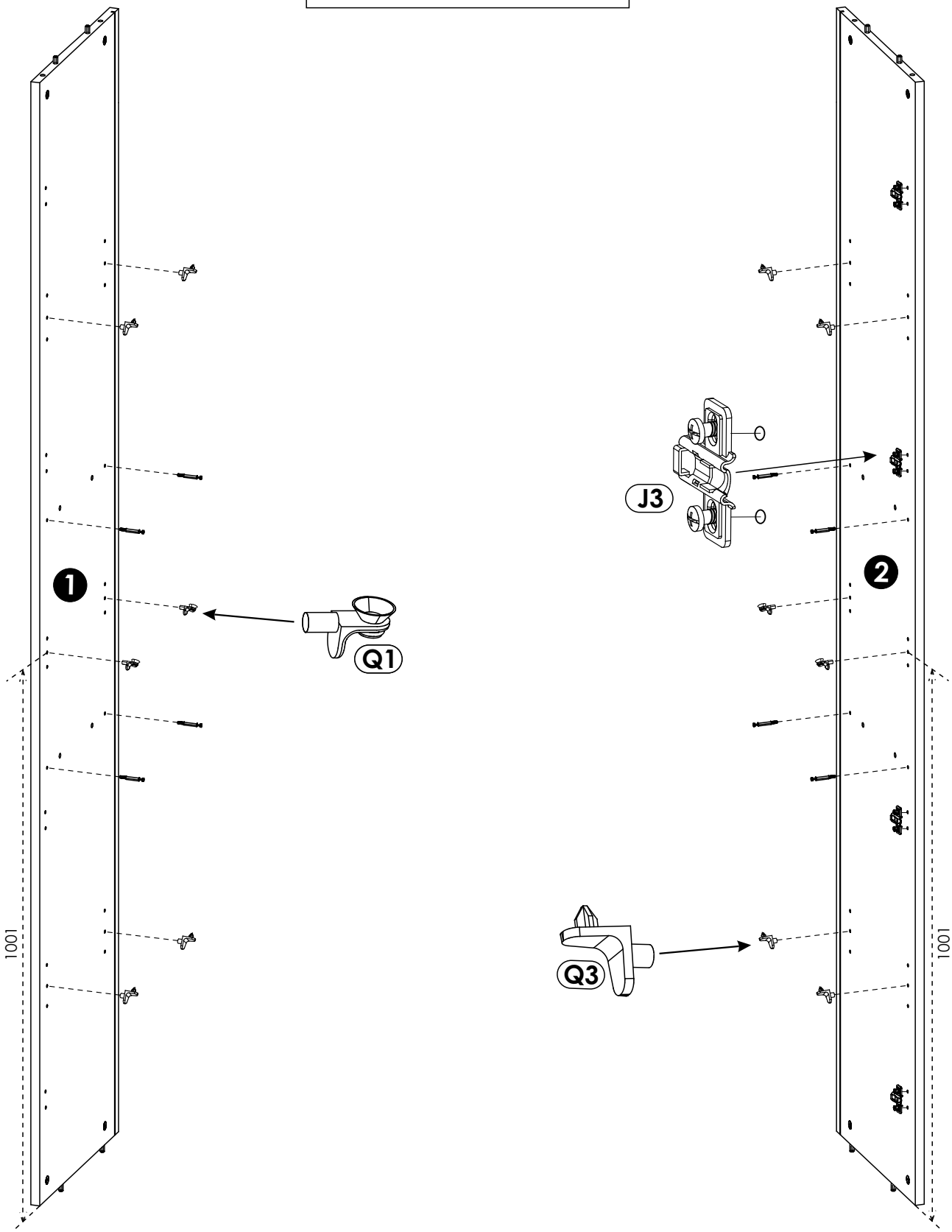

4R▶

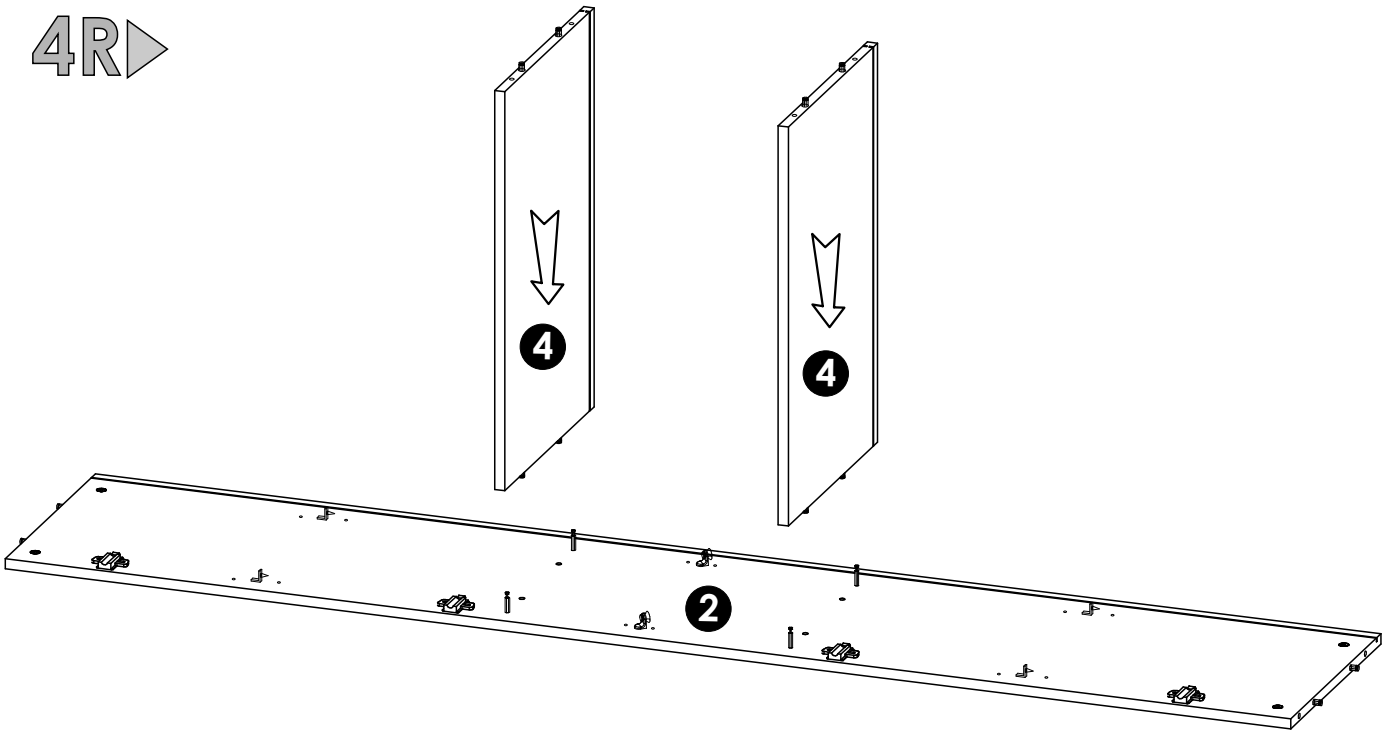

5R▶

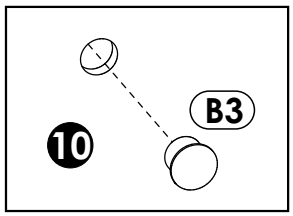

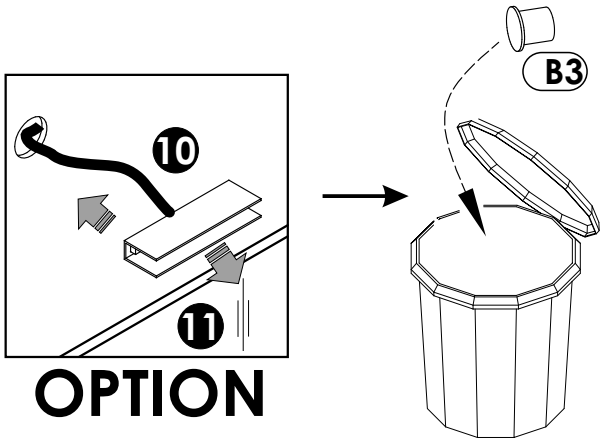

OPTION

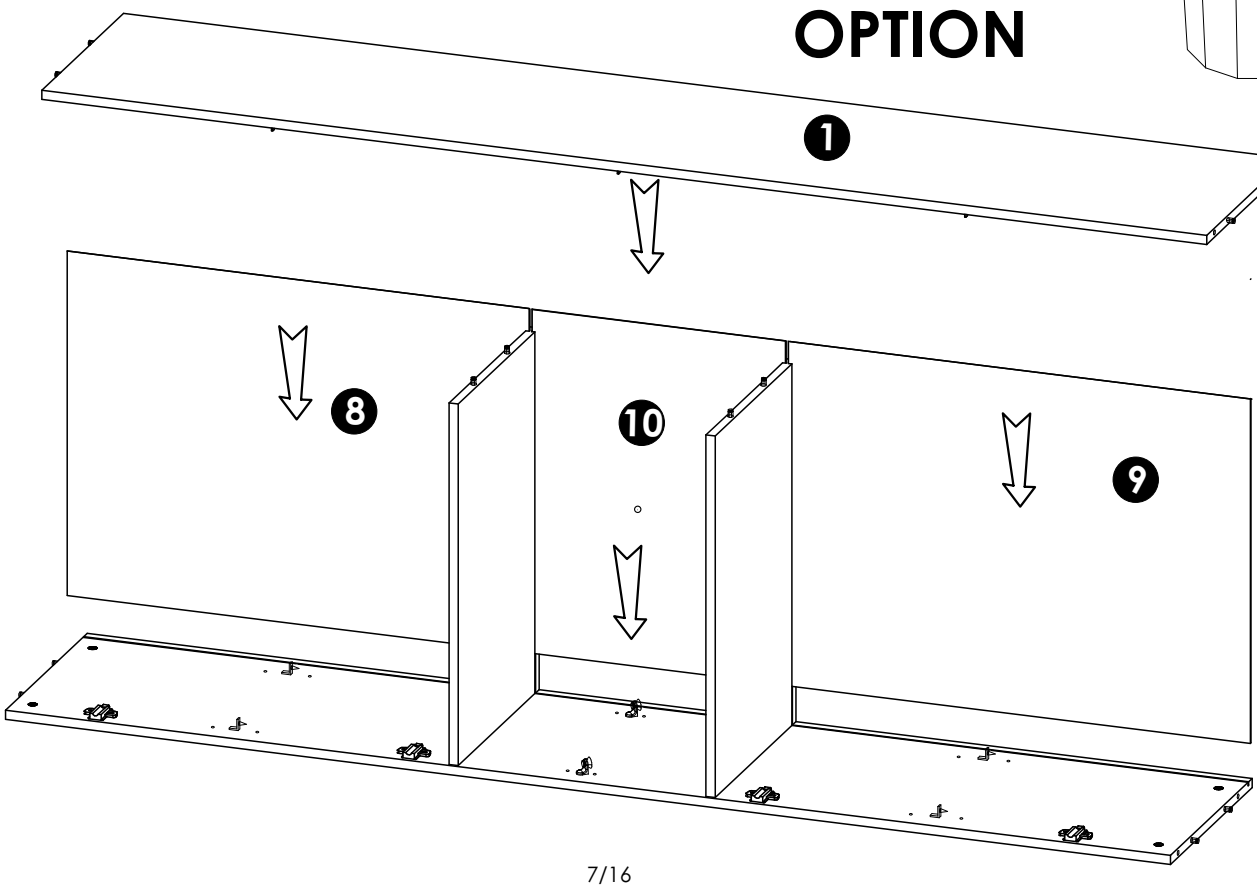

6R

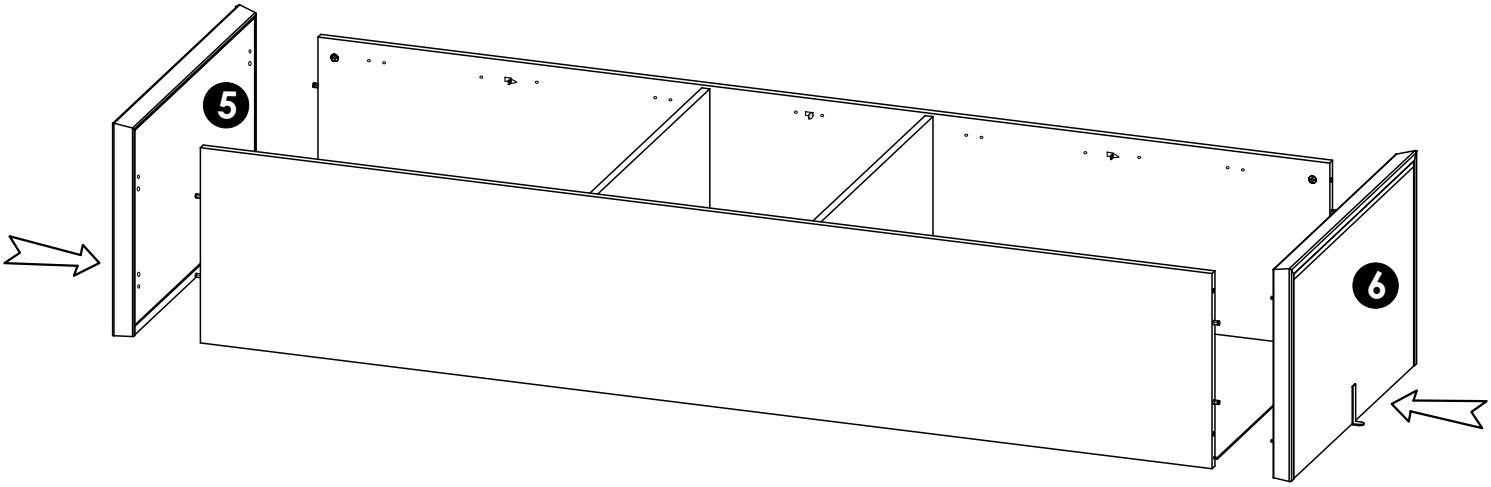

7

D0	3 x 15 mm	x28
M1		x28

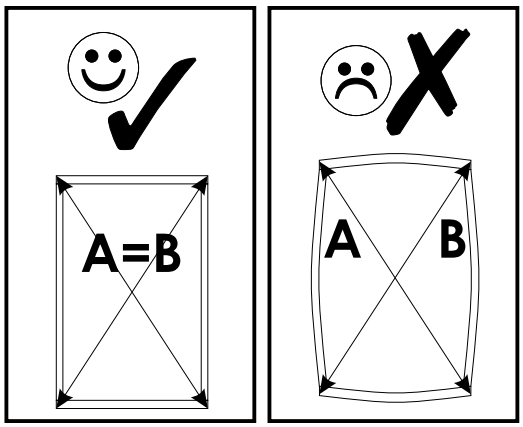

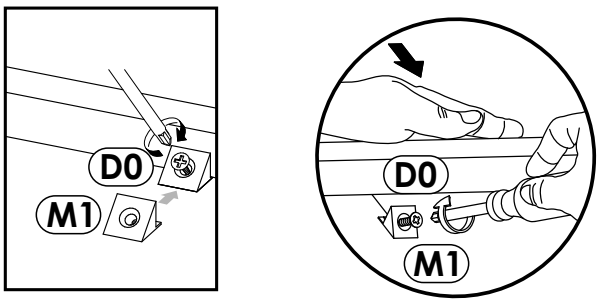

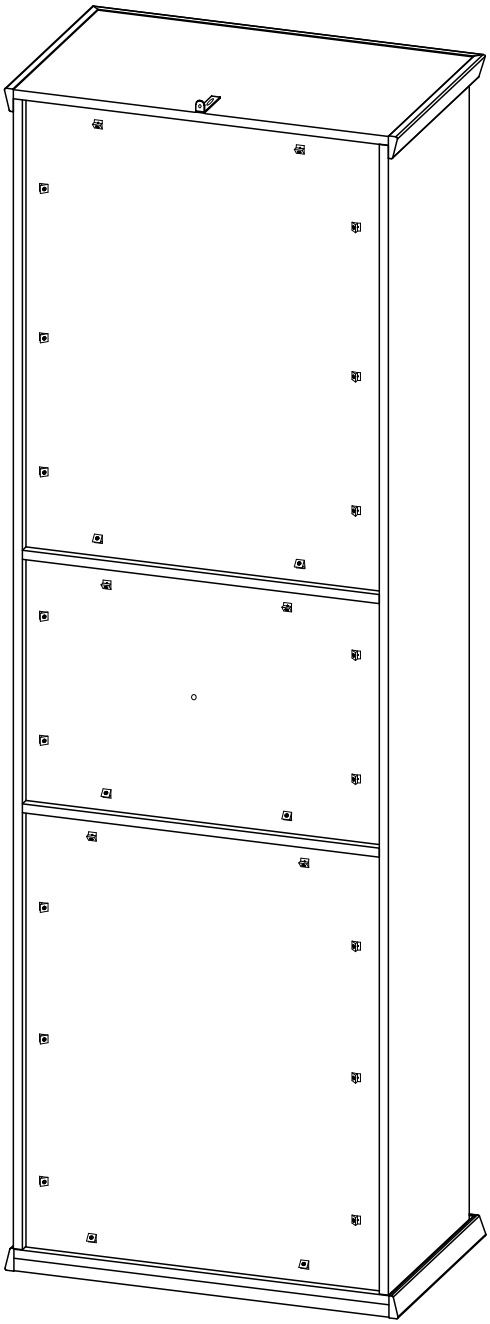

8

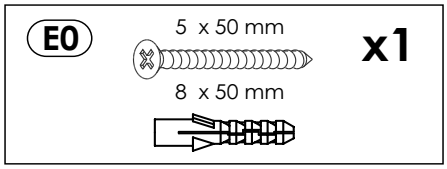

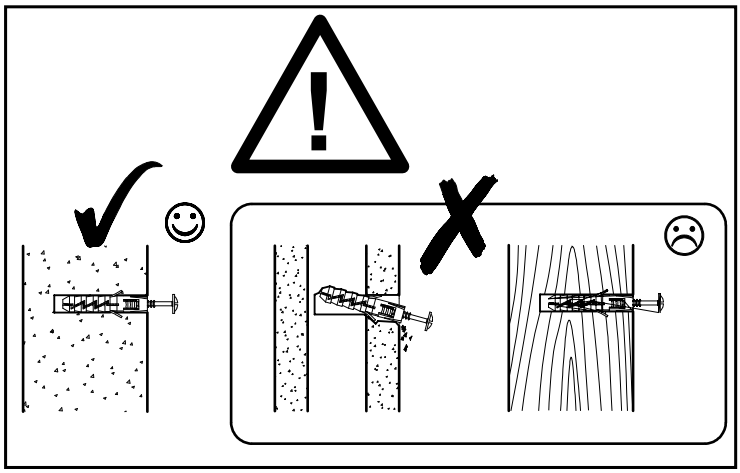

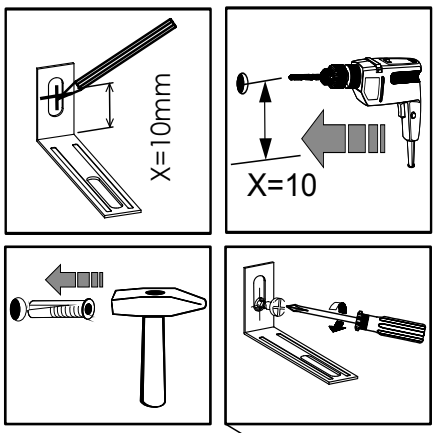

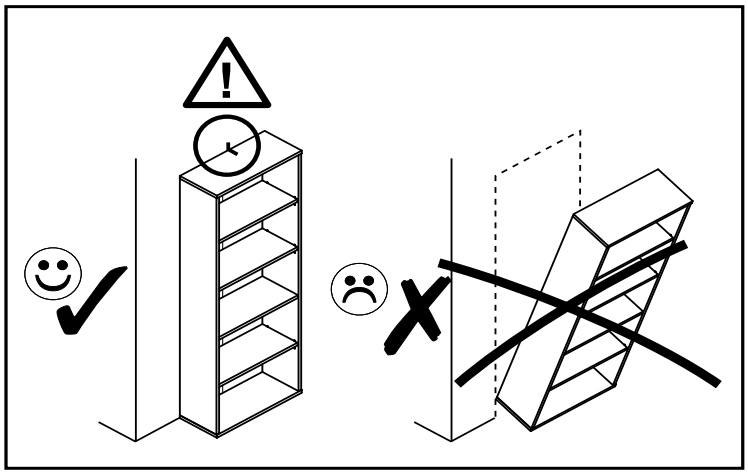

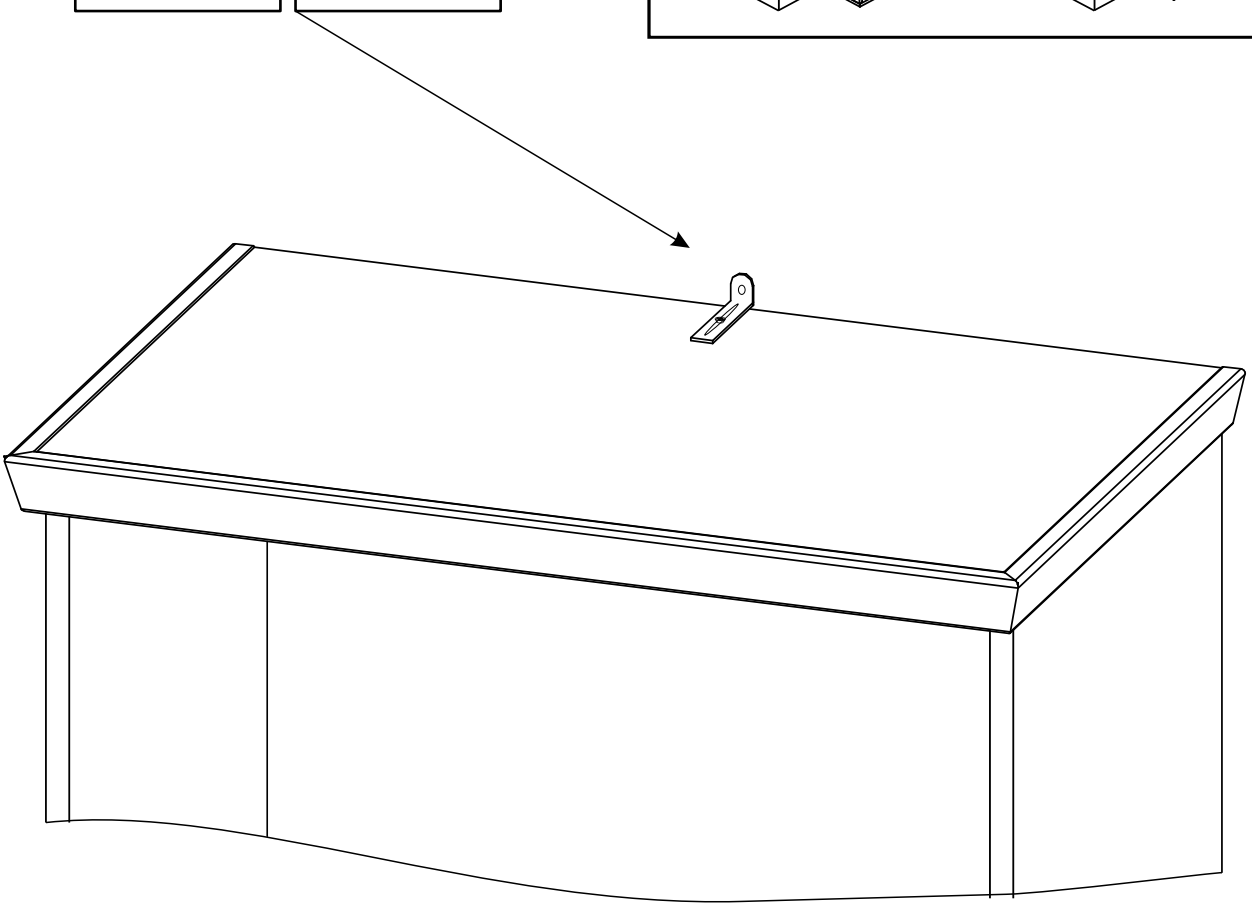

9

D10	4 x 16 mm	x8	J10	x4

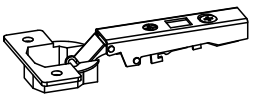

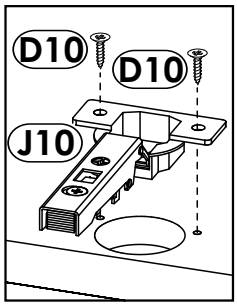

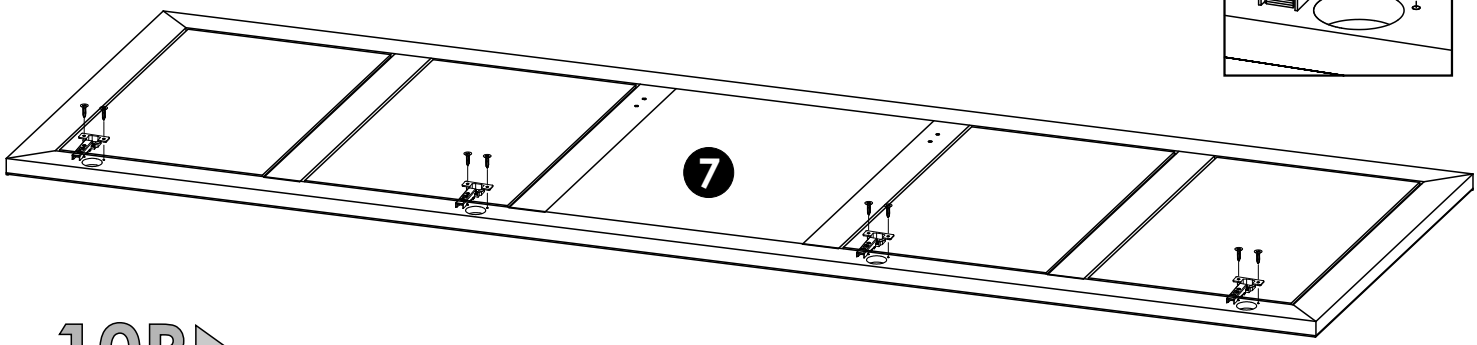

10R

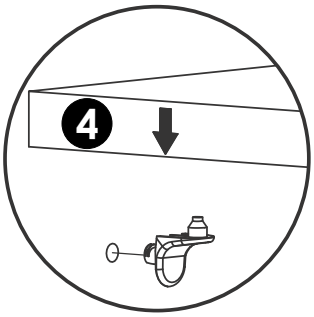

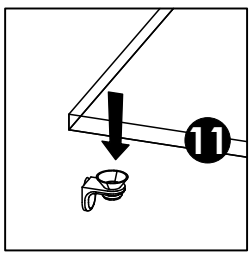

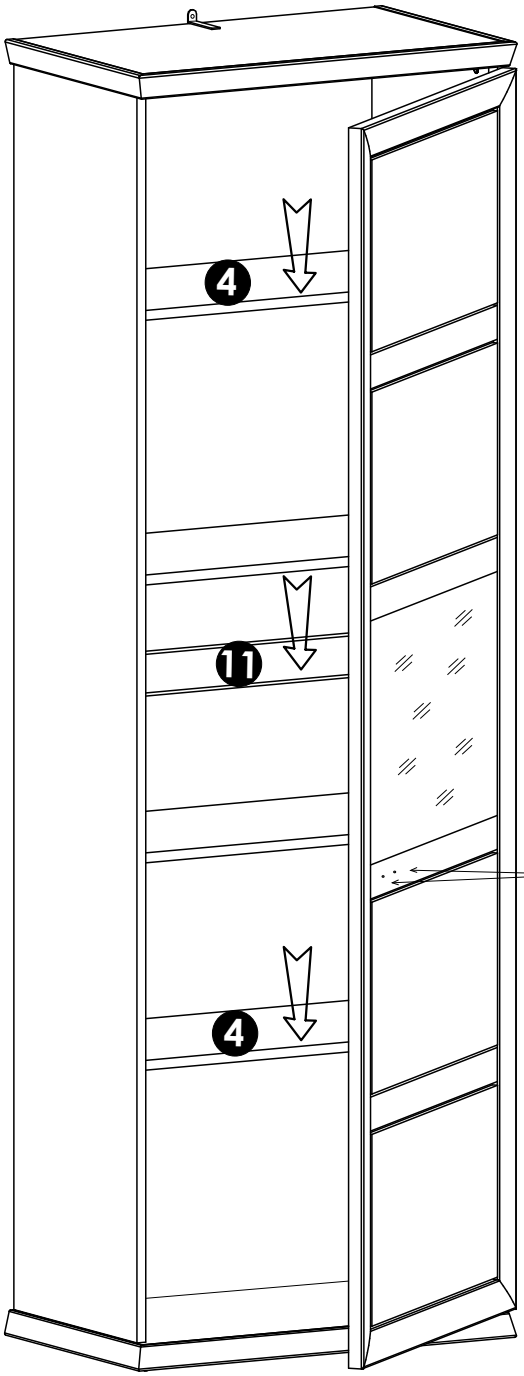

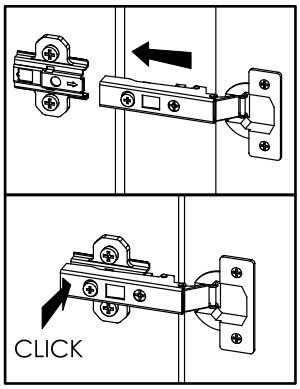

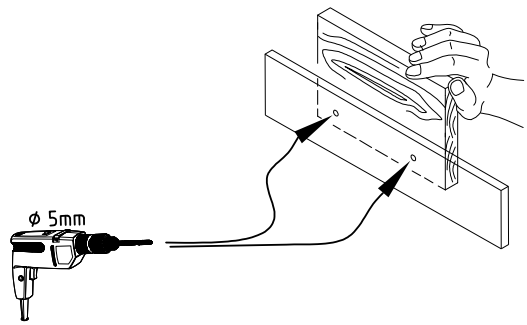

11R

C0 x16	H2 x2
L6 x1	U3* x2

*MODEL CAMRON

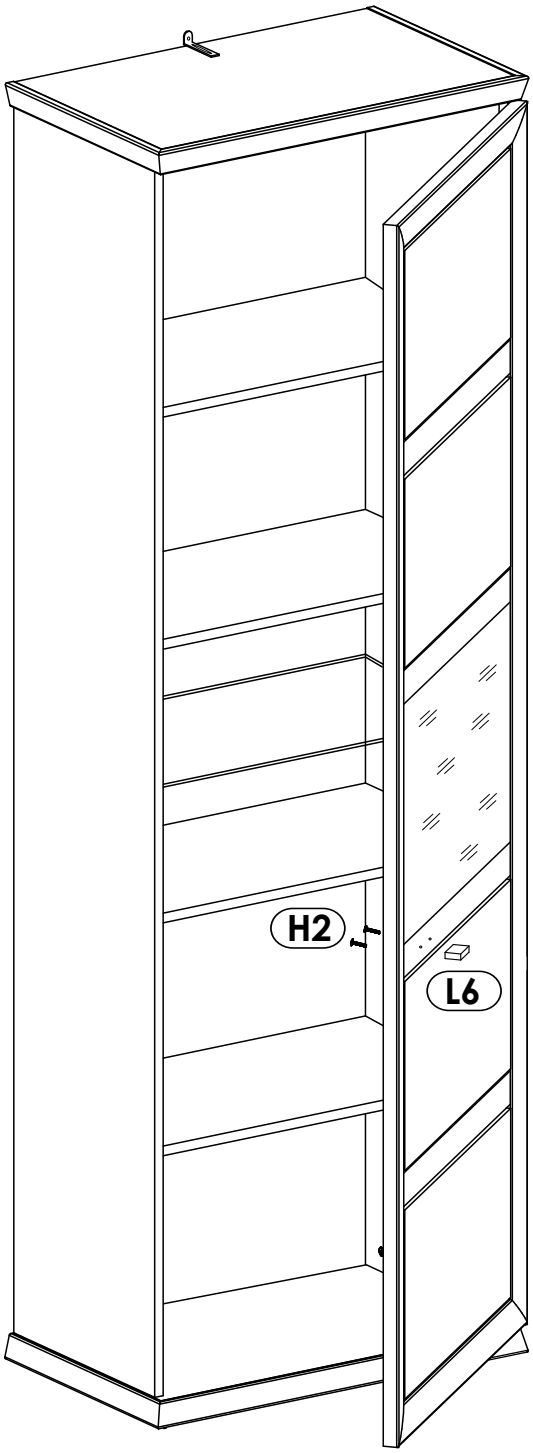

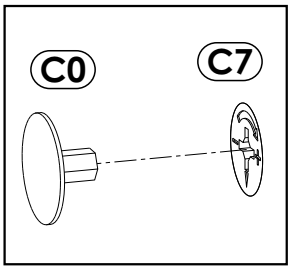

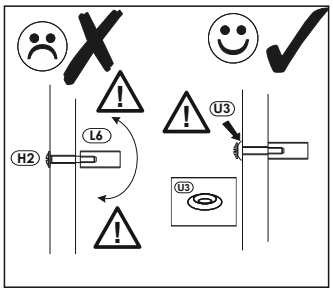

C2 x8	J3 x4	Q1 x4
	Q3 x8	

3L ▶

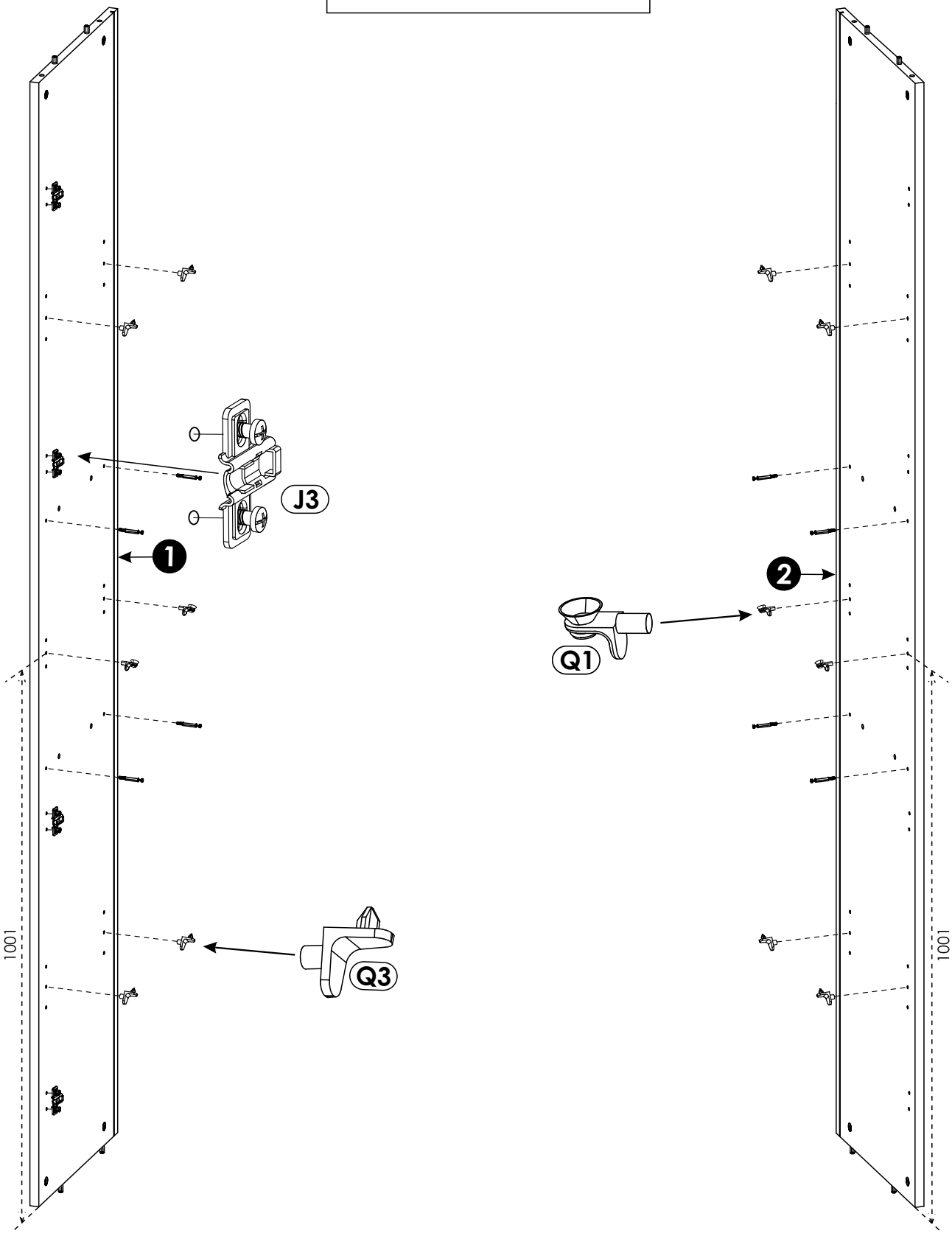

4L

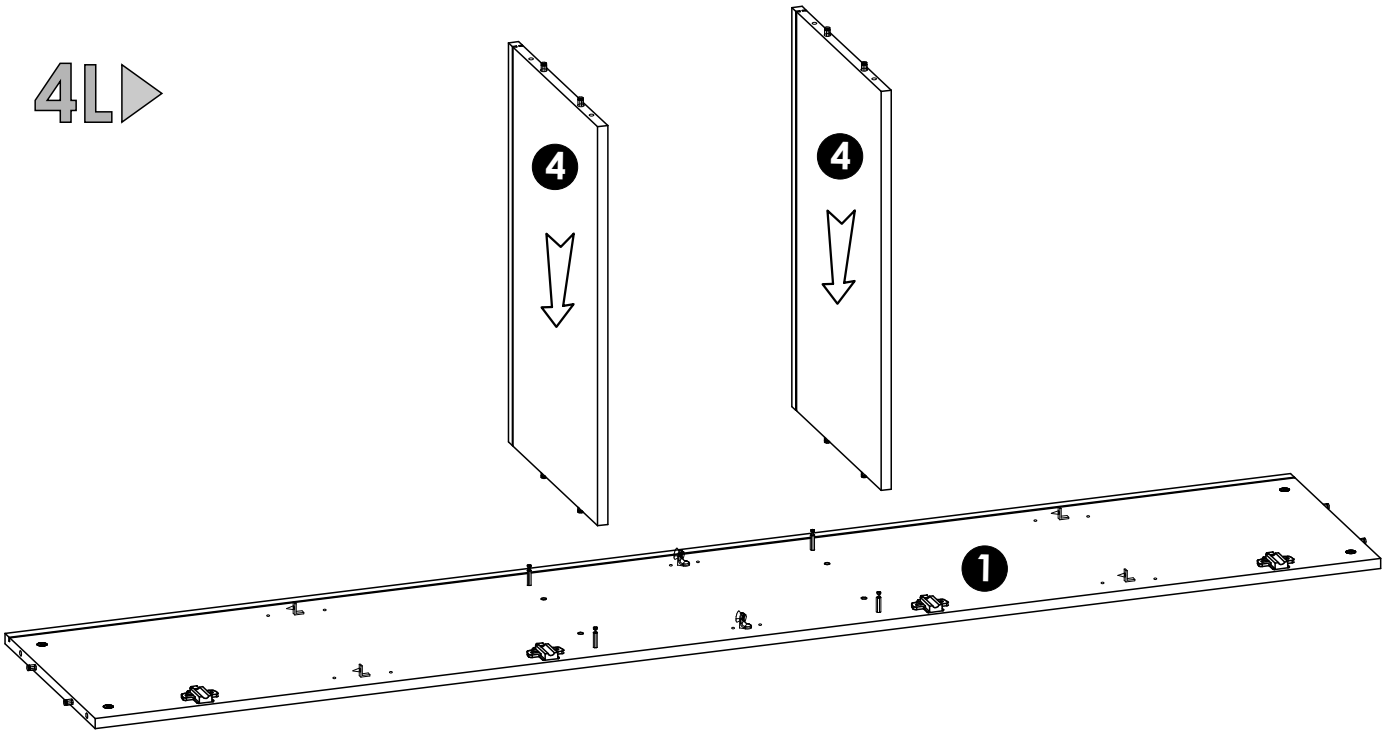

5L

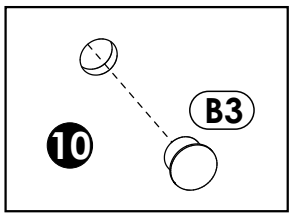

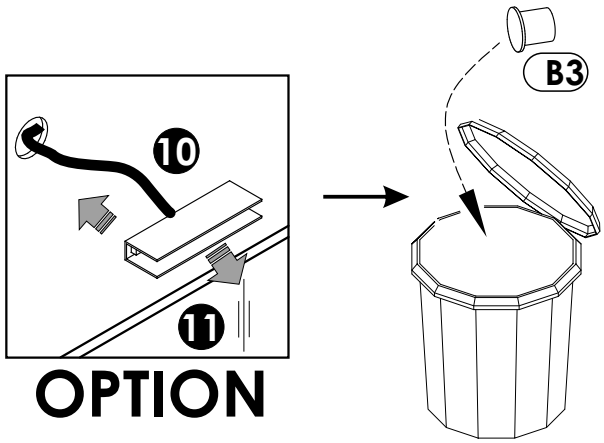

OPTION

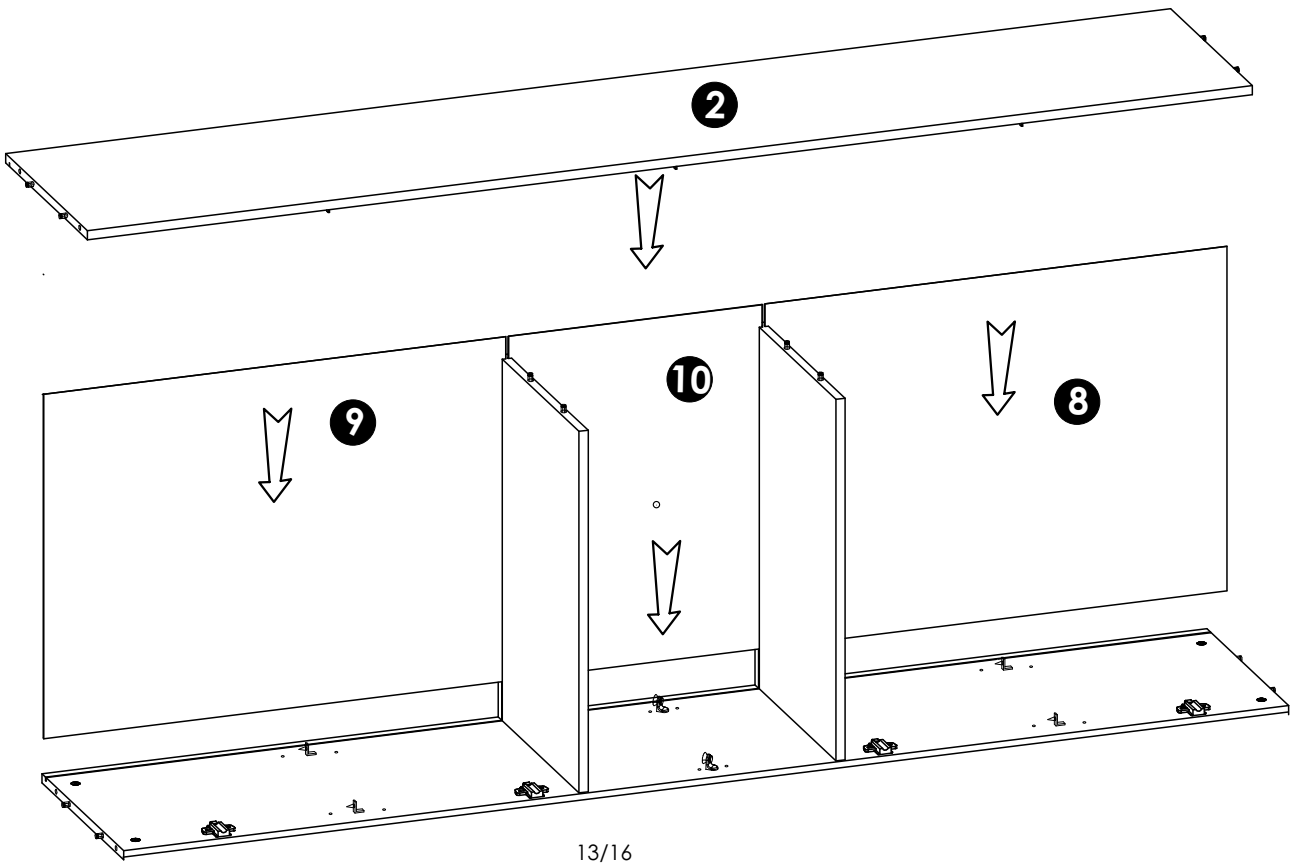

6L

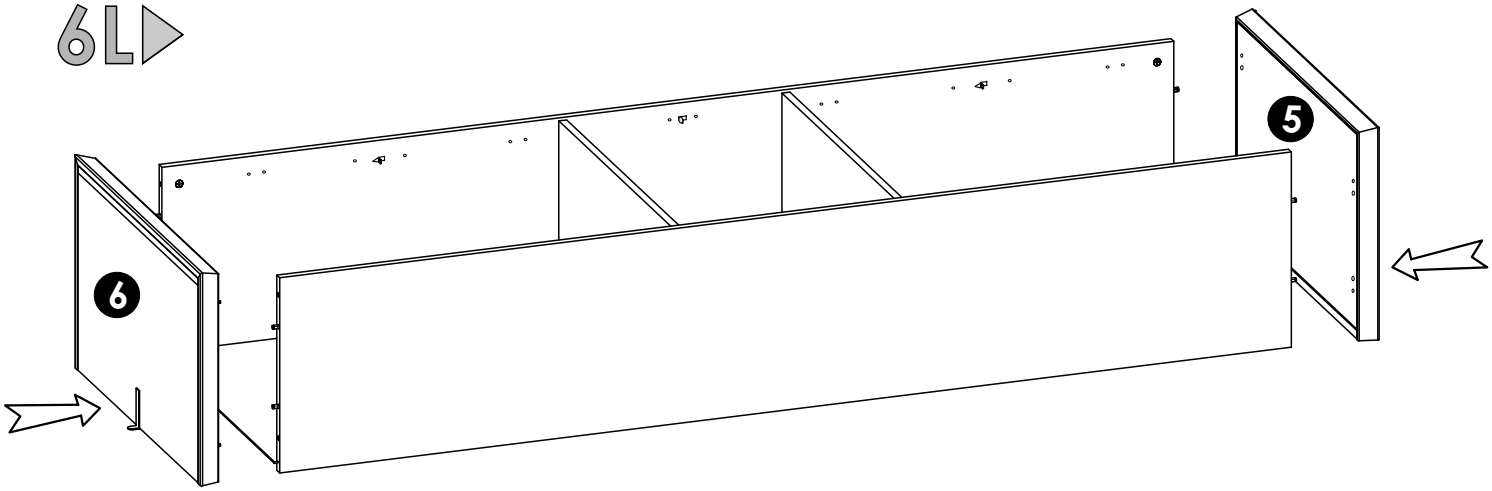

7L

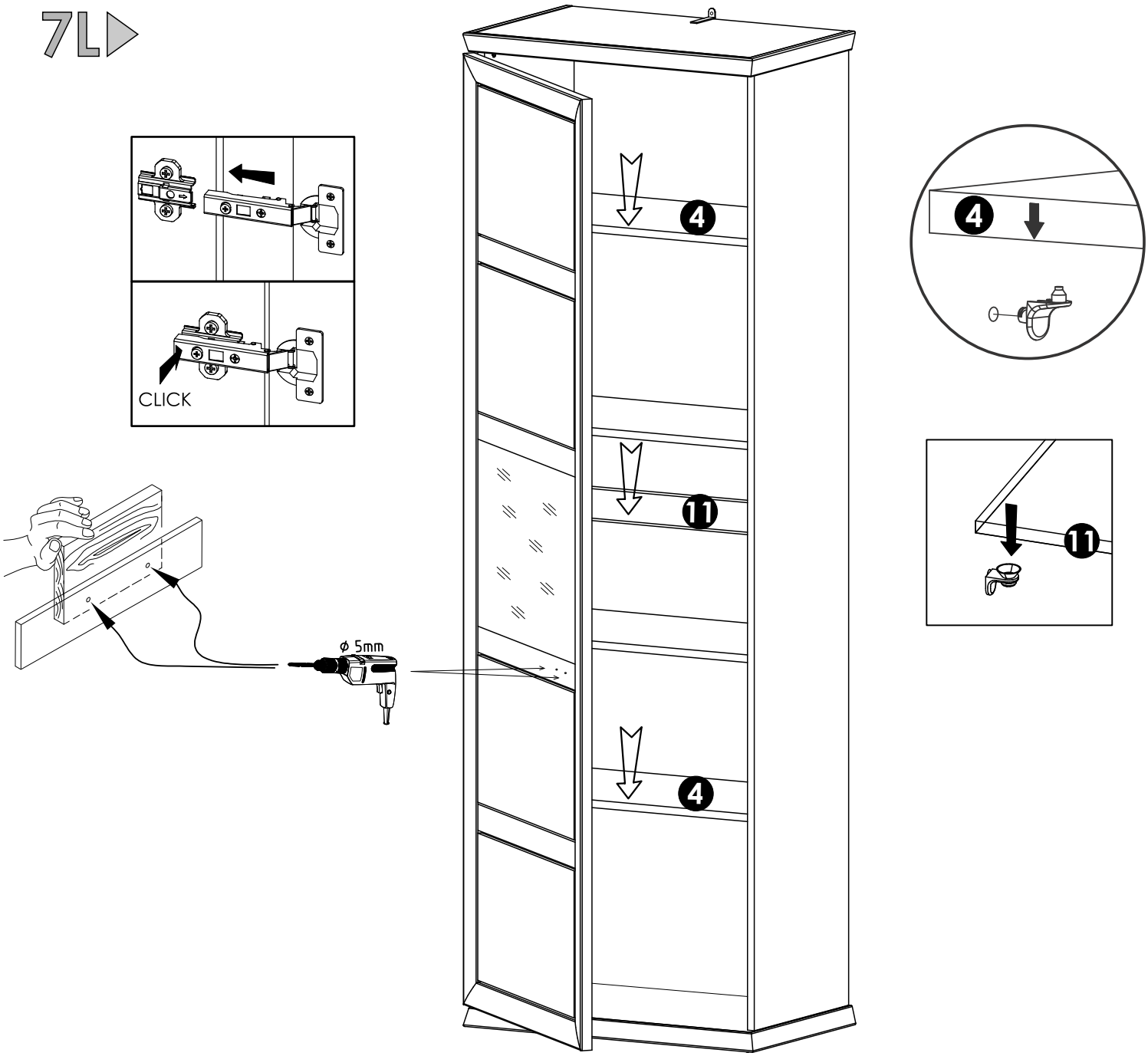

11L

C0 x16	H2 x2
L6 x1	U3* x2 *MODEL CAMRON

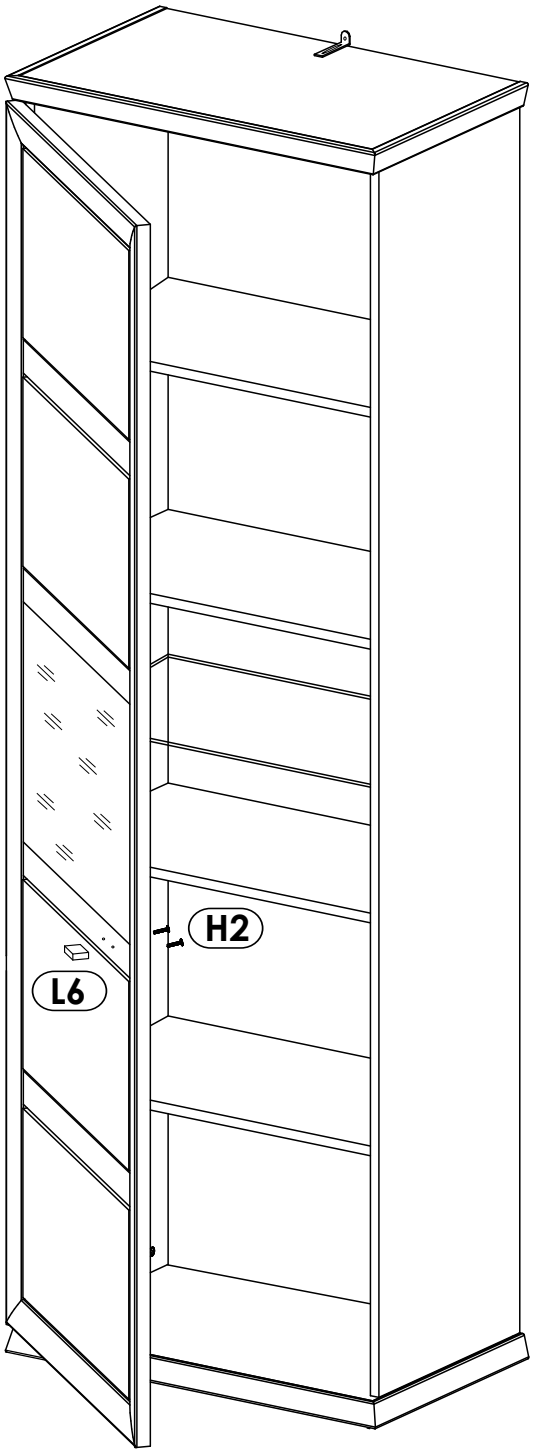

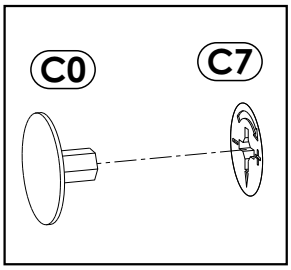

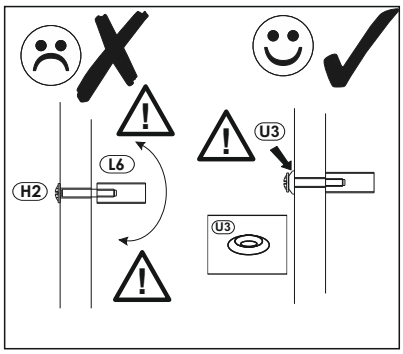

12

x1
LOGO...

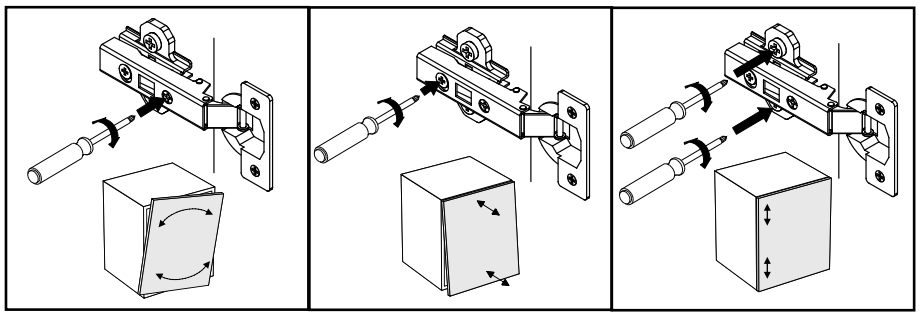

max

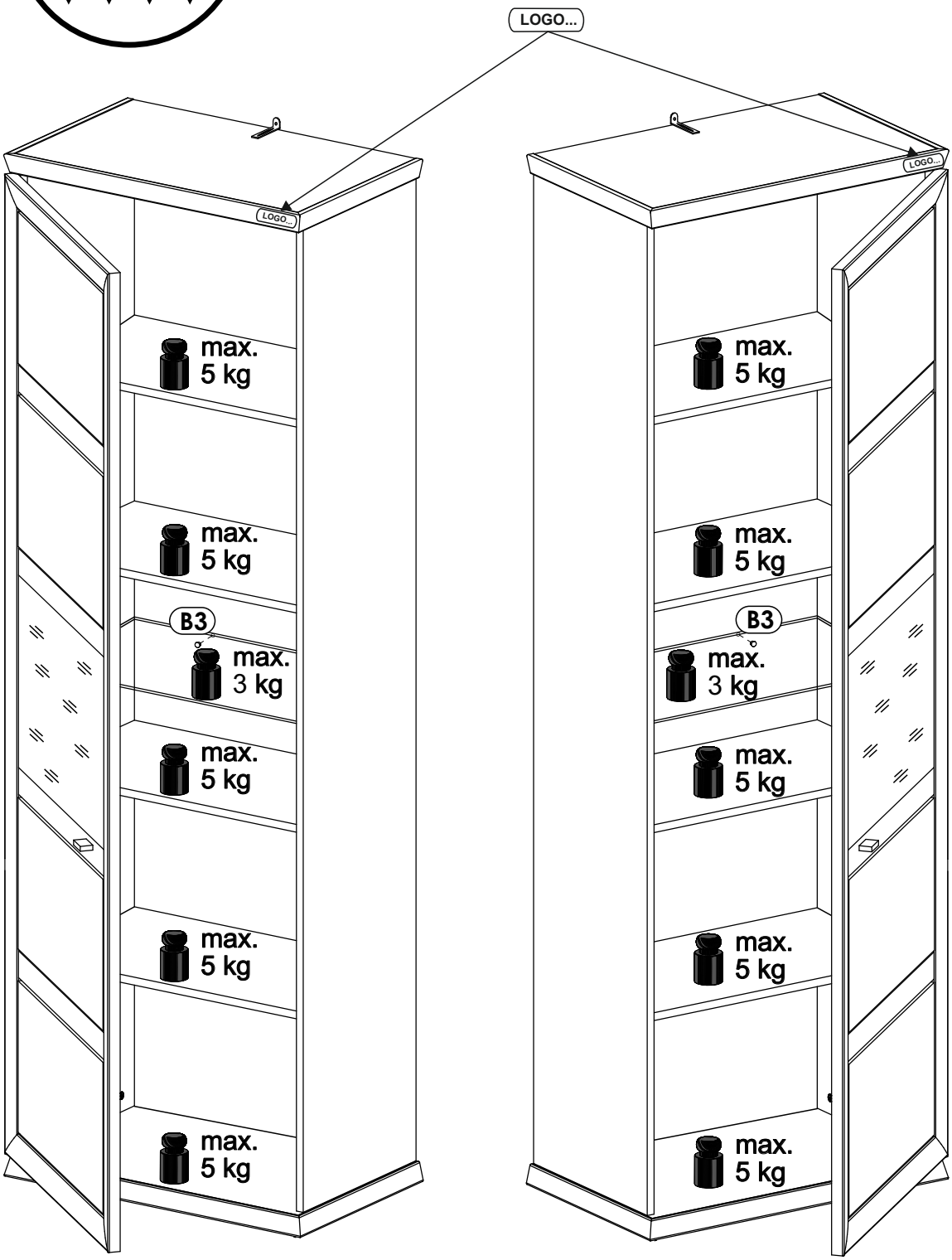
LOGO...
LOGO...
LOGO...
max.
5 kg
max.
5 kg
B3
max.
3 kg
max.
5 kg
max.
5 kg
max.
5 kg
max.
5 kg
max.
5 kg
B3
max.
3 kg
max.
5 kg
max.
5 kg
max.
5 kg