SIDEBOARD
CAMRON/LAUREY/BENTON

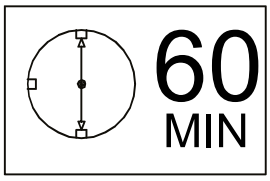

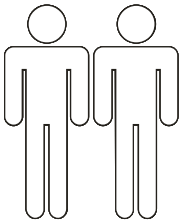

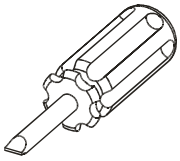

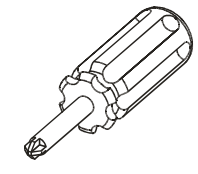

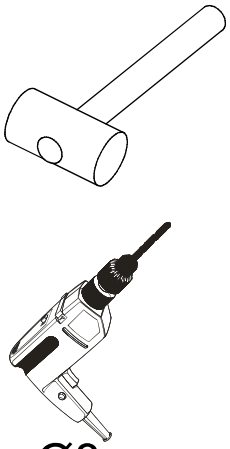

Ø8

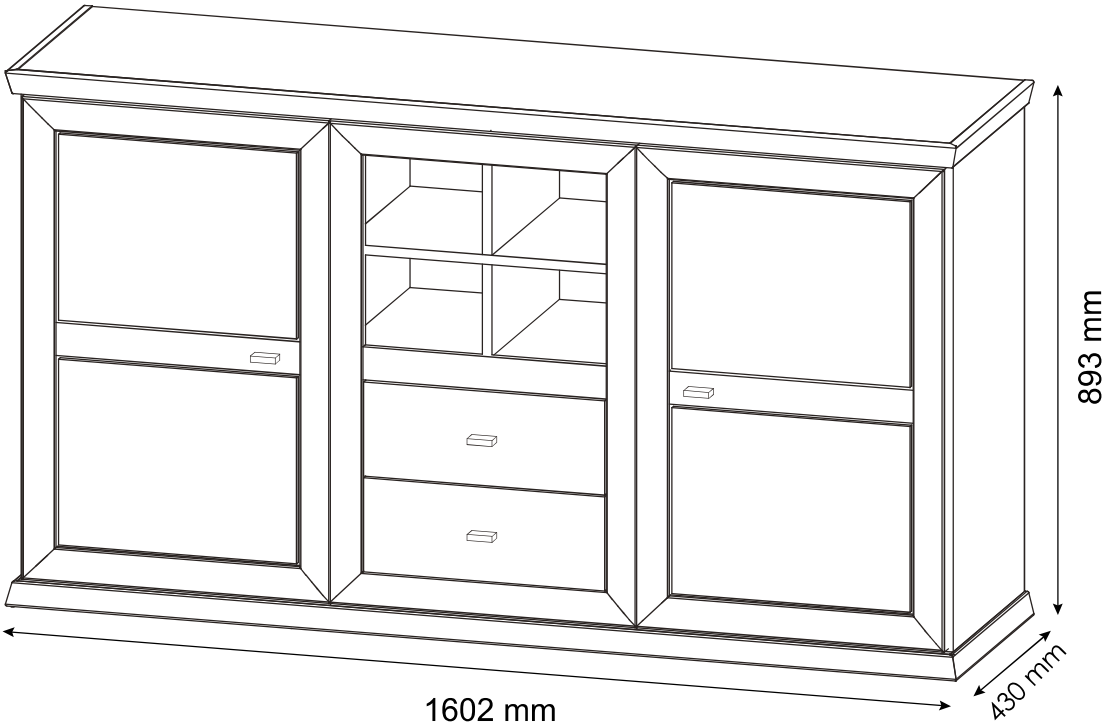

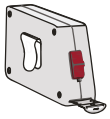

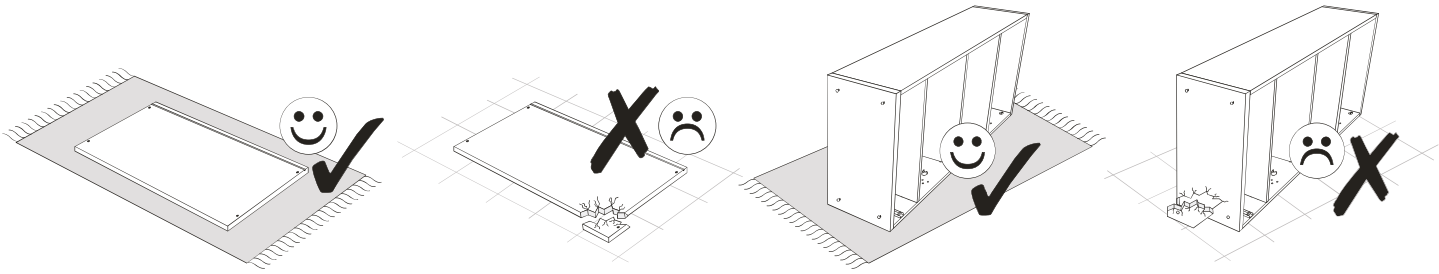

B1 7 x 50 mm x16	C0 x30	C2 x42
D0 3 x 15 mm x40	D10 4 x 16 mm x8	D21 5 x 13 mm x2
D31 6,3 x 13 mm x16	E0 5 x 50 mm 8 x 50 mm x2	H2 4 x 22 mm x8
J3 x4	J10 x4	L6 x4
M1 x40	K 4mm x1	N14 L-350mm x2
P0 x2	Q3 x8	U2 x8
U3 **x8**		

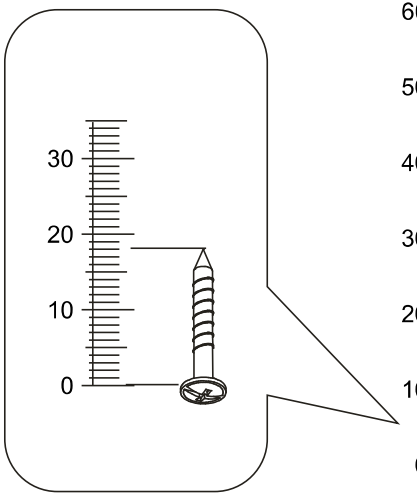

1	837	x	393	x	16	1	1/3
2	837	x	393	x	16	1	1/3
3	837	x	393	x	16	1	1/3
4	837	x	393	x	16	1	1/3
5	416	x	373	x	16	1	1/3
6	416	x	373	x	16	1	1/3
7	236	x	371	x	16	1	2/3
8	153	x	371	x	16	1	2/3
9	350	x	120	x	16	2	1/3
10	350	x	120	x	16	2	1/3
11	354	x	120	x	16	2	1/3
12	406	x	157	x	16	2	2/3

13	509	x	373	x	16	2	1/3
14	488	x	393	x	16	1	1/3
15	488	x	373	x	16	1	1/3
16	496	x	425	x	2,8	1	1/3
17	364	x	344	x	2,8	2	1/3
18	1602	x	428	x	40	1	2/3
19	1602	x	428	x	40	1	2/3
20	518	x	847	x	2,8	2	3/3
21	497	x	414	x	2,8	1	3/3
22	805	x	520	x	25	1	3/3
23	805	x	521	x	25	2	3/3

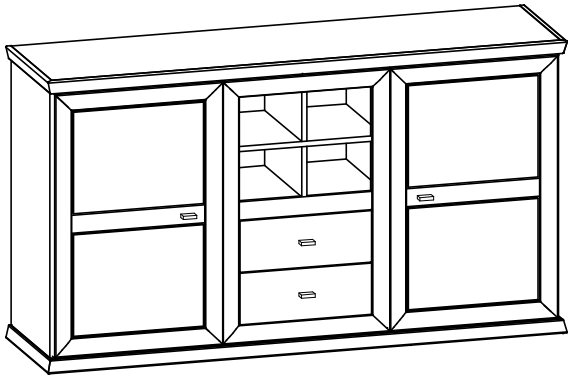

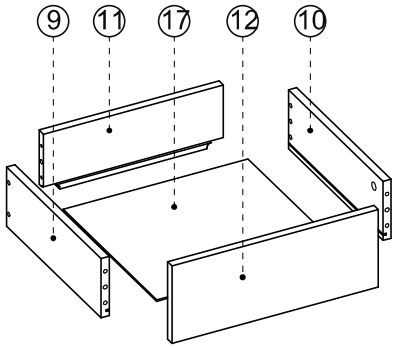

x2

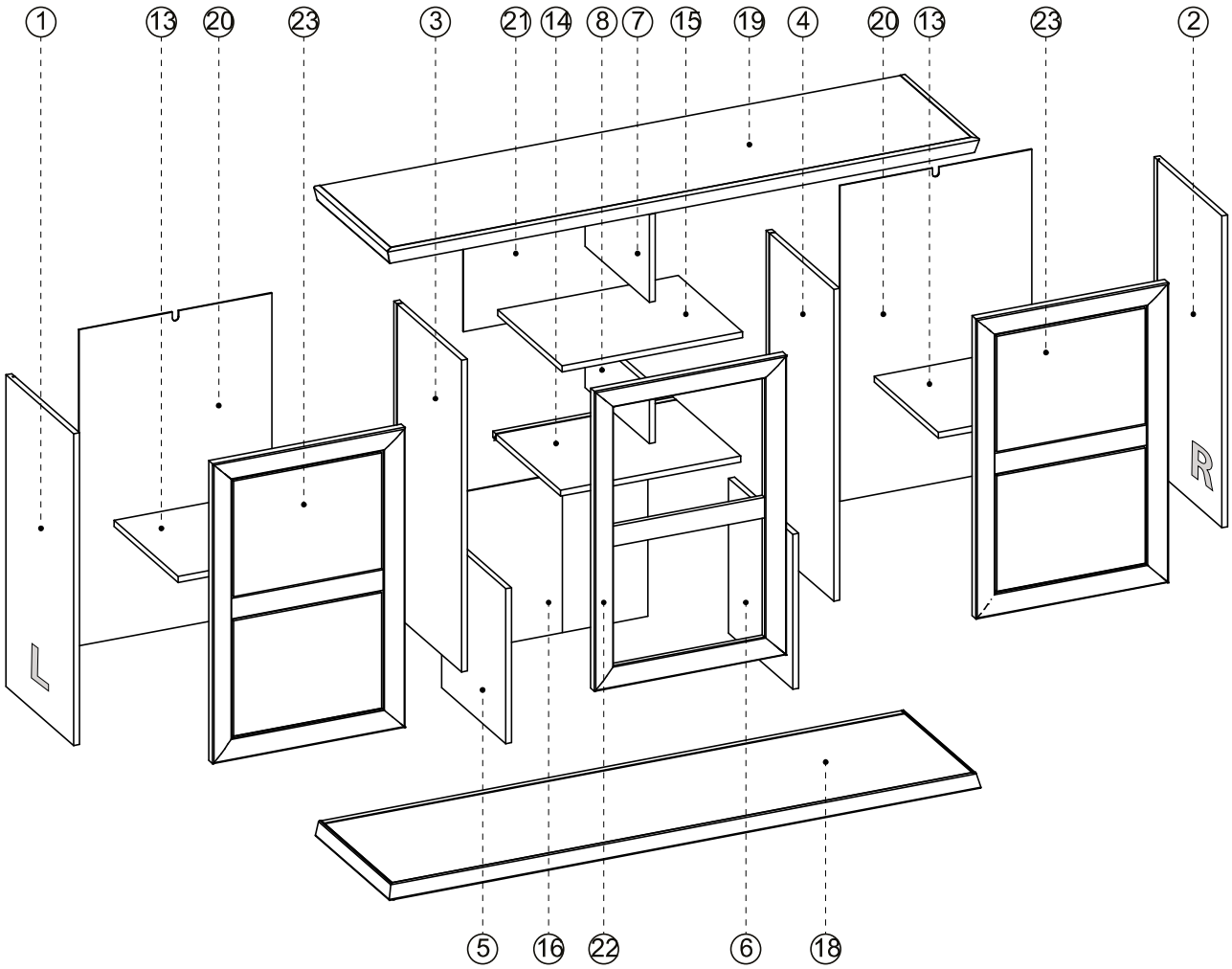

1

J3 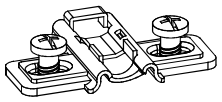 x2	Q3 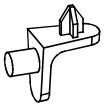 x2

L

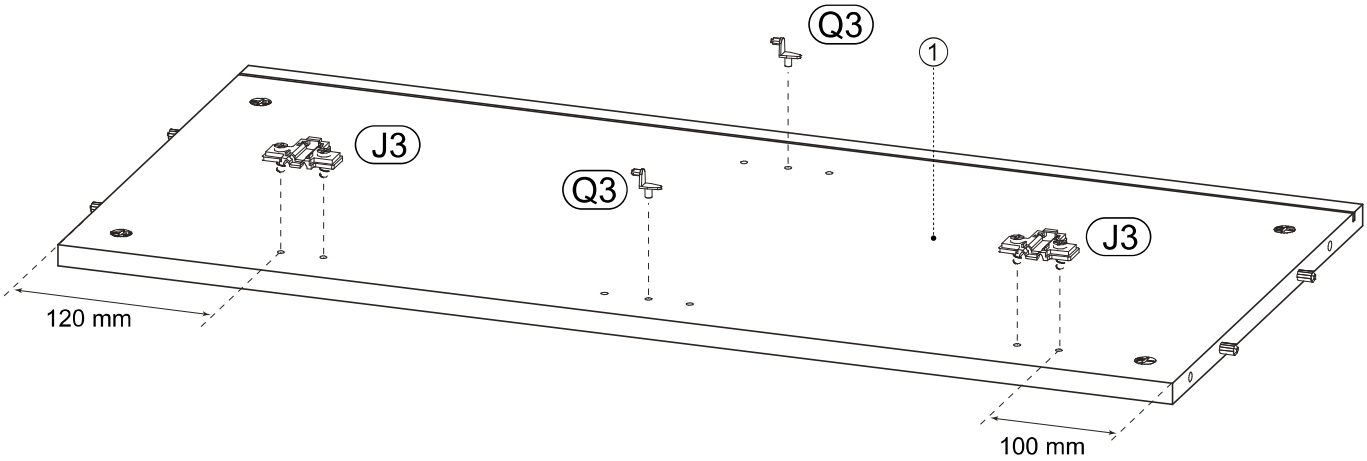

2

J3 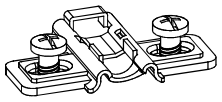 x2	Q3 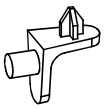 x2

R

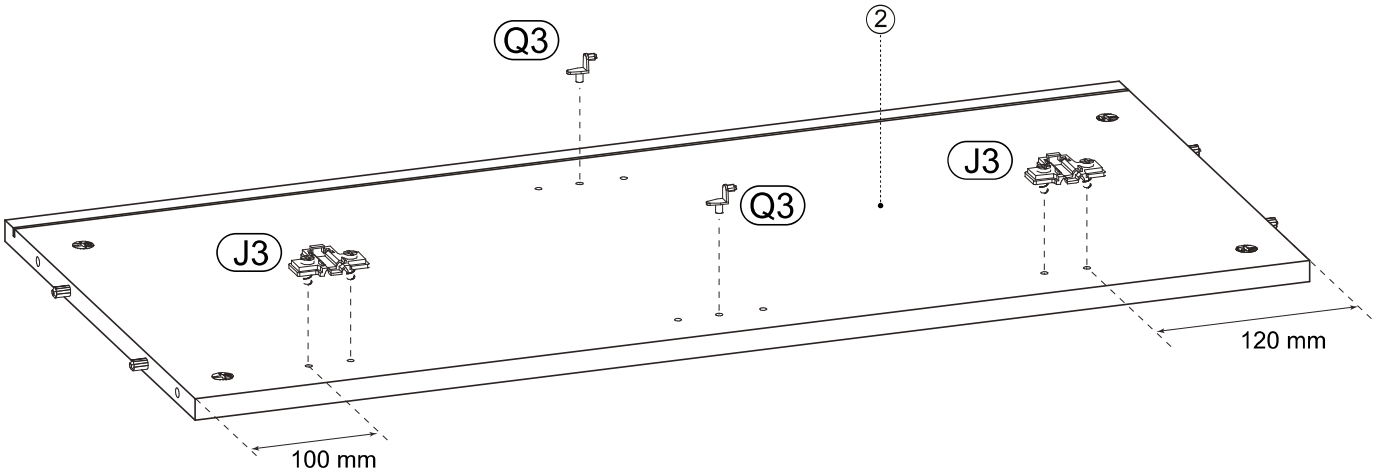

3

C2 x4	Q3 x2 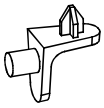

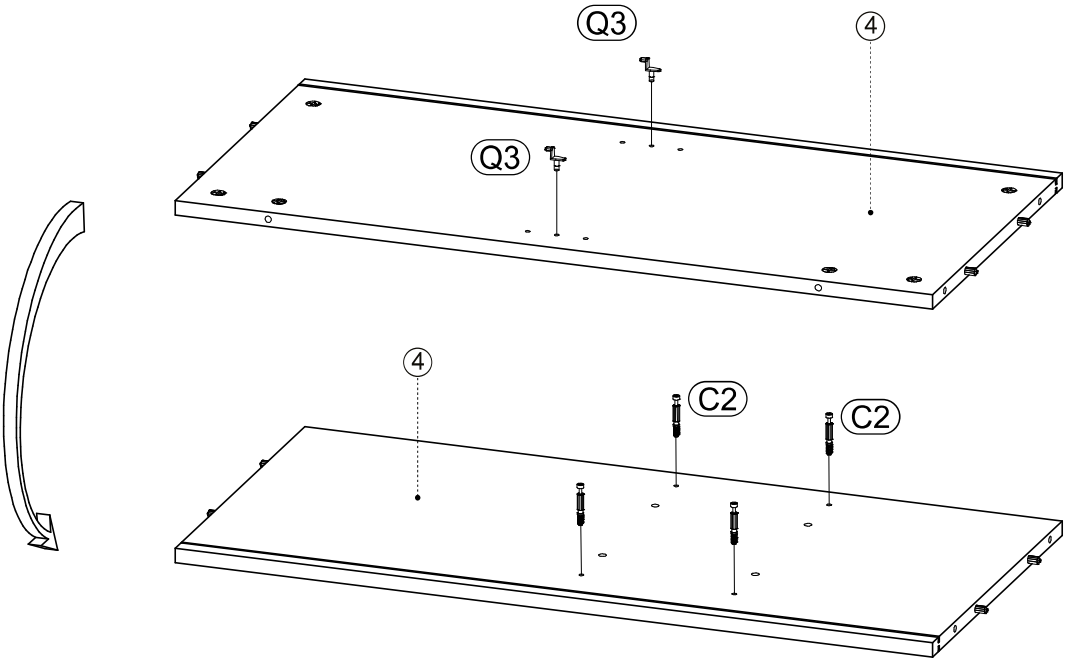

4

C2 x4	Q3 x2 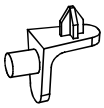

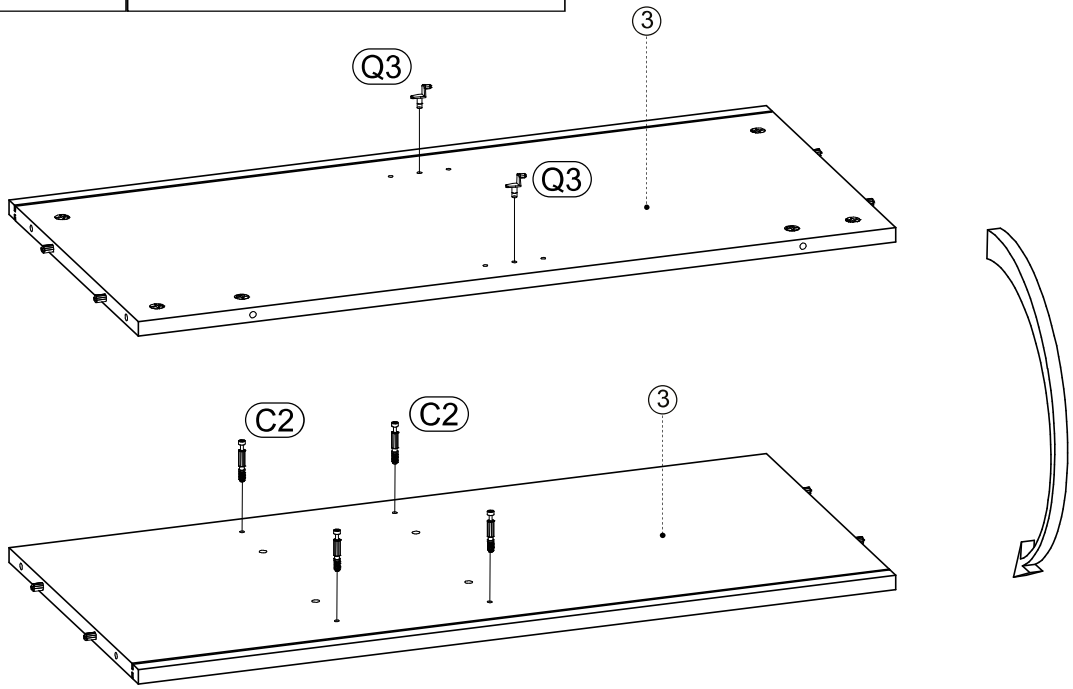

5

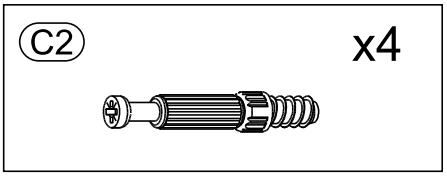

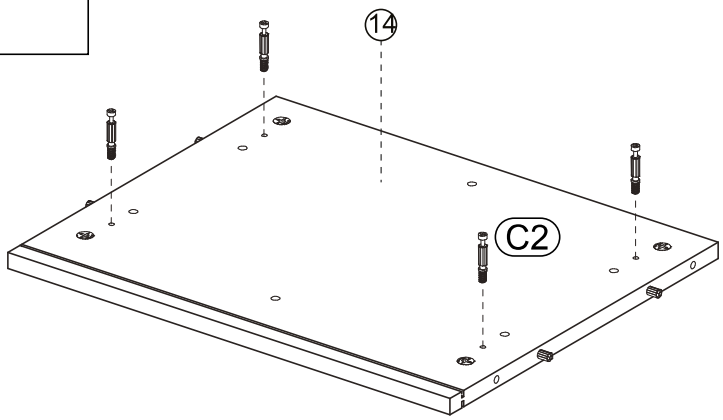

6

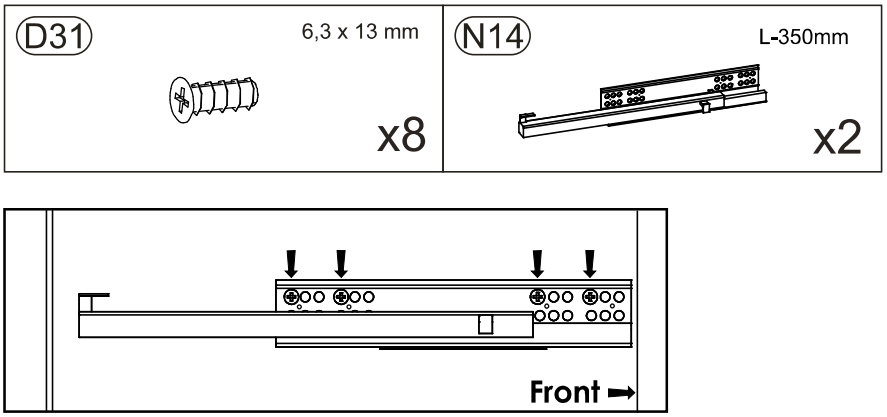

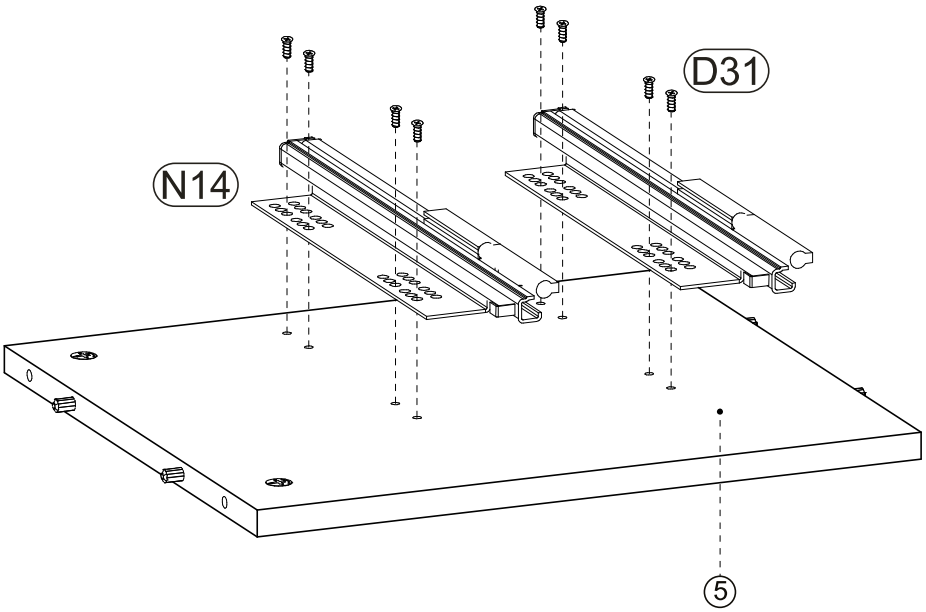

7

D31	N14
6,3 x 13 mm	L-350mm
	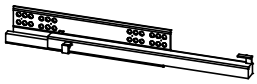
x8	x2

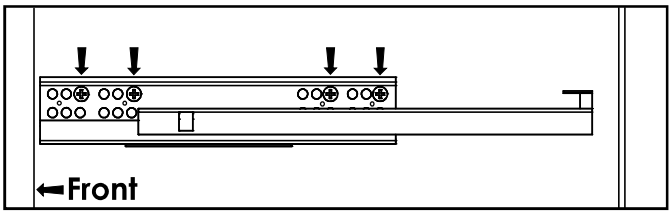

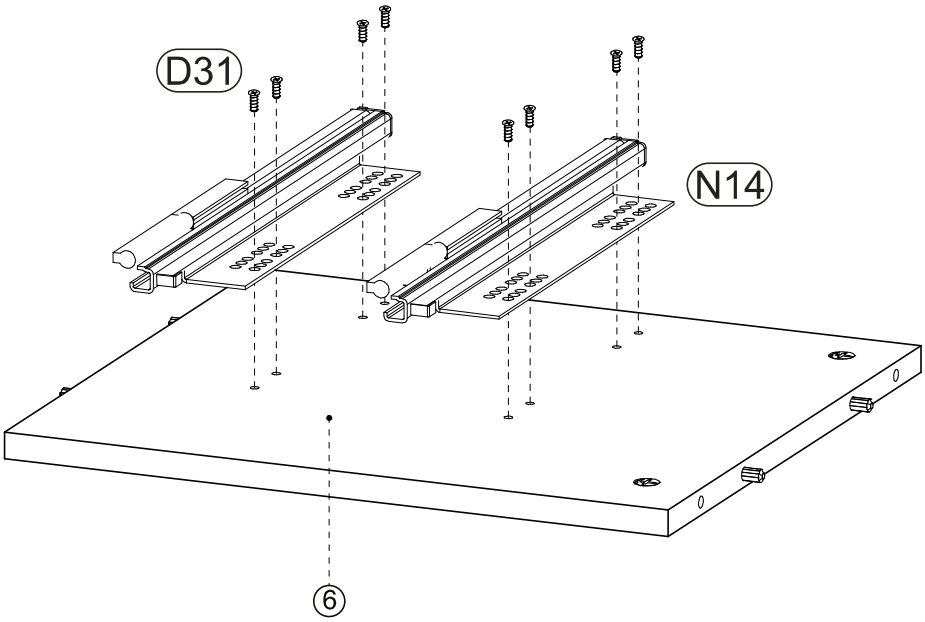

8

C2	D21	P0
x10	5 x 13 mm x2	x2
		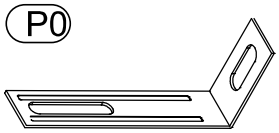

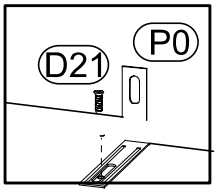

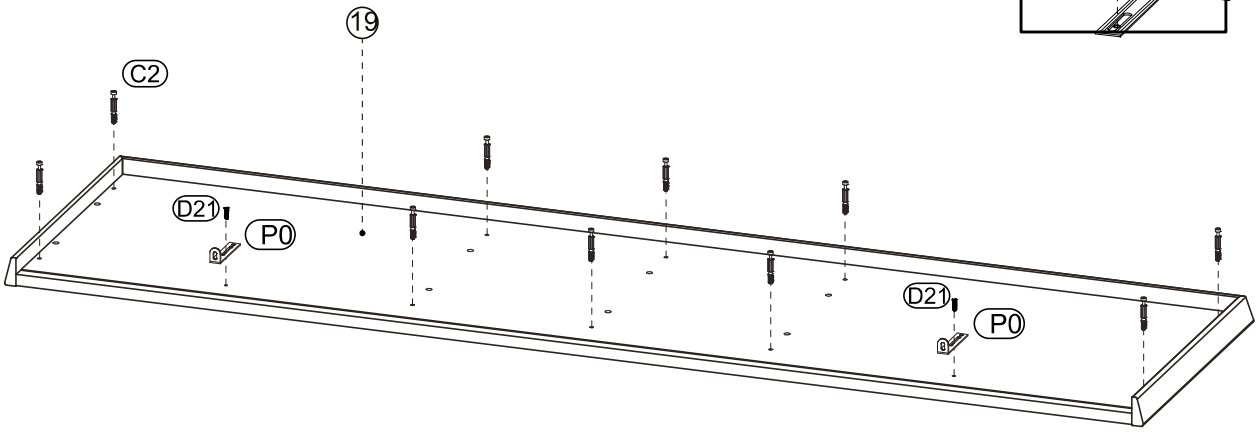

9

C2 x8	U2 x8

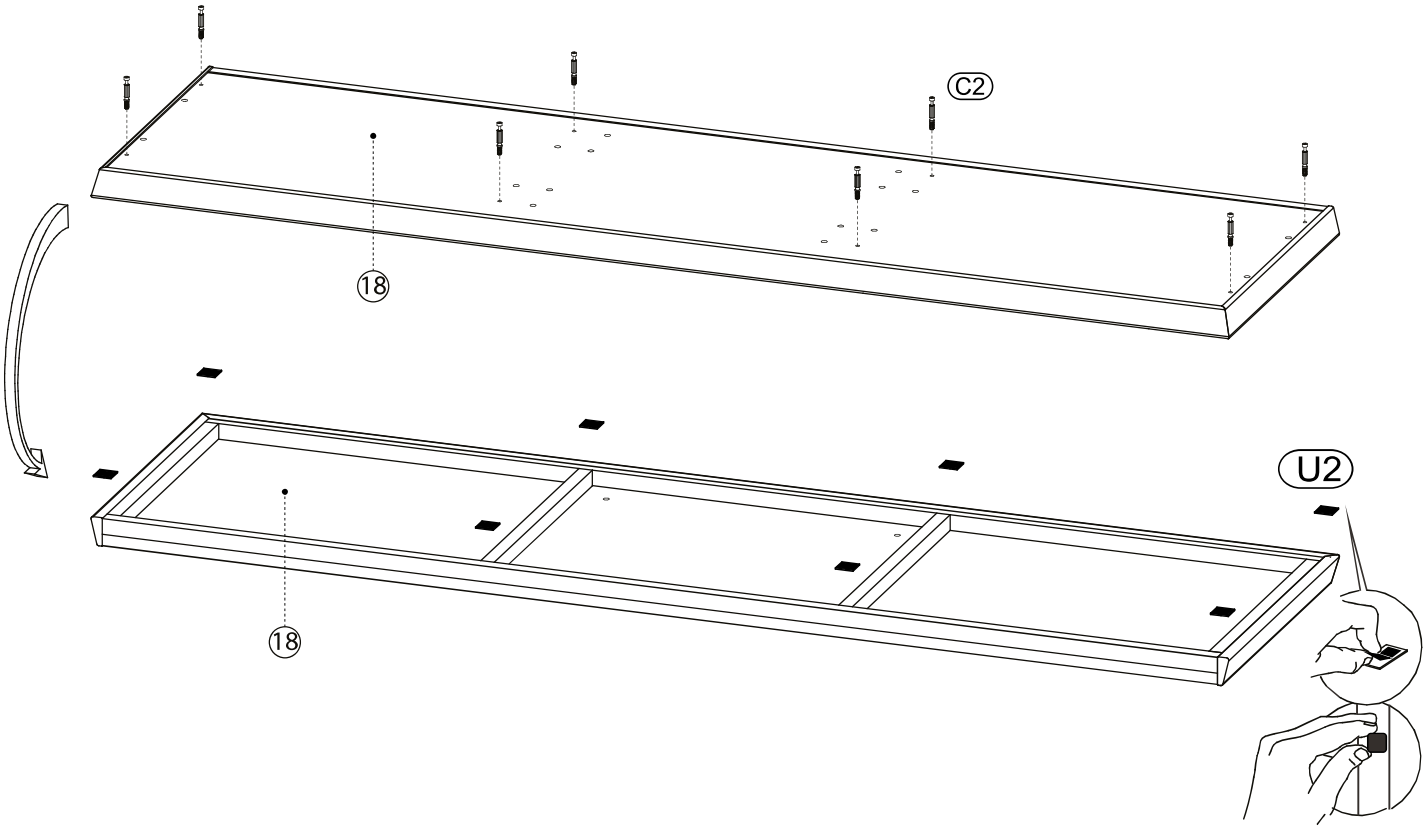

10

D10 4 x 16 mm x8	J10 x4
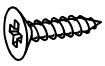	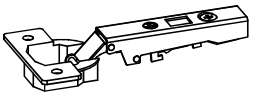

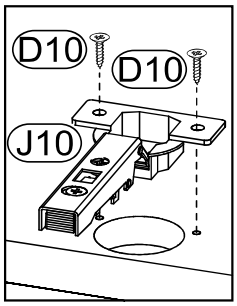

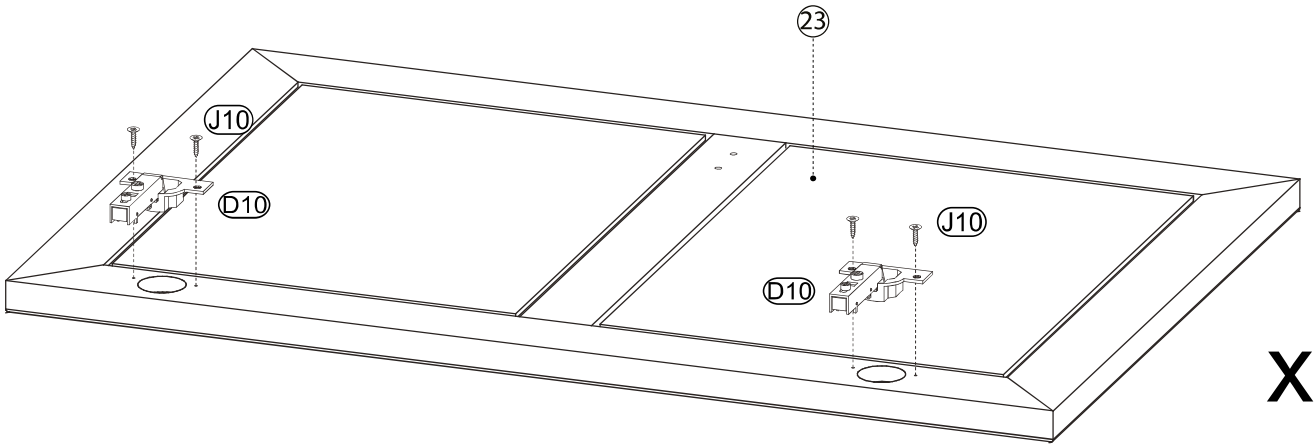

x2

11

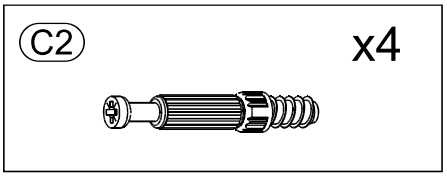

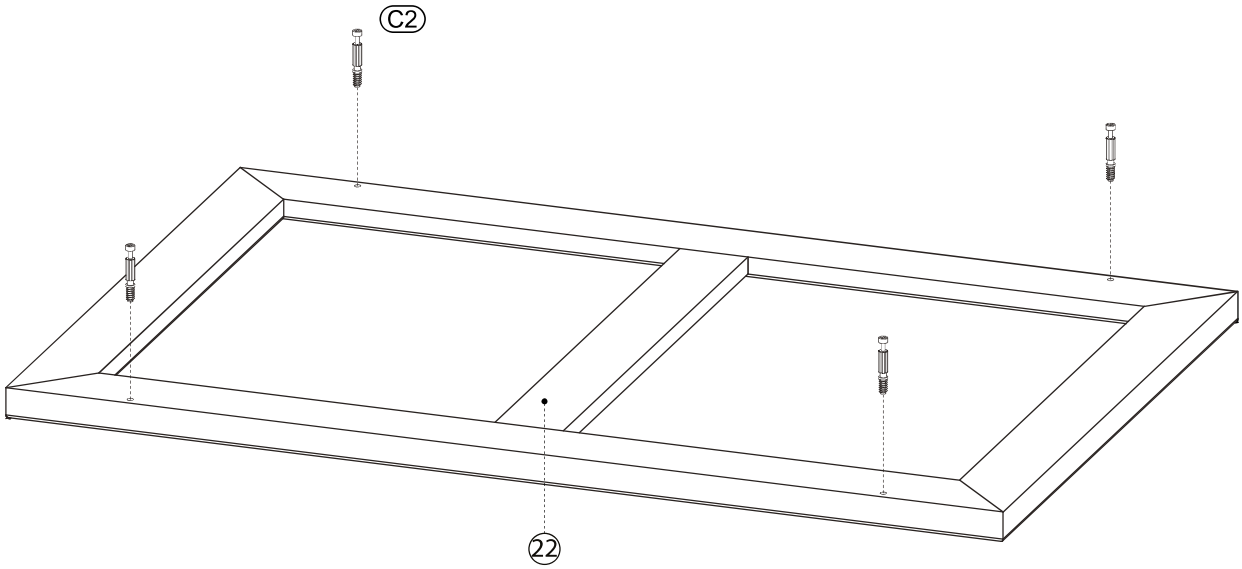

12

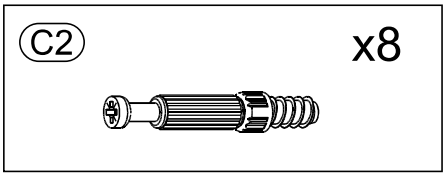

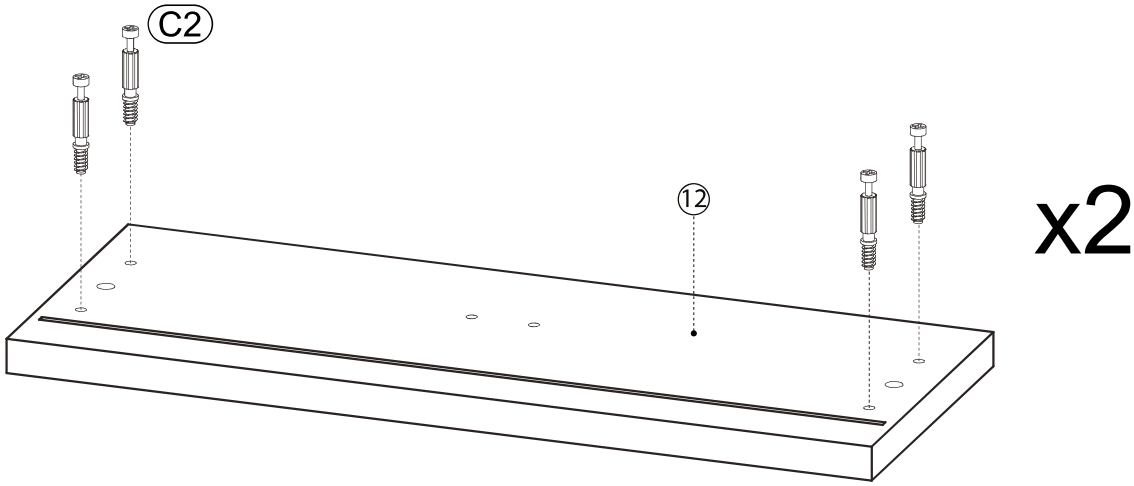

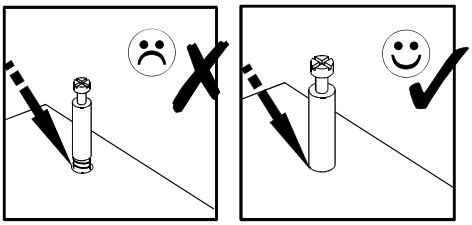

13

B1 7 x 50 mm x8 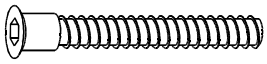	K x1 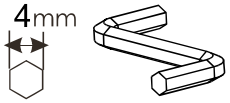

x2

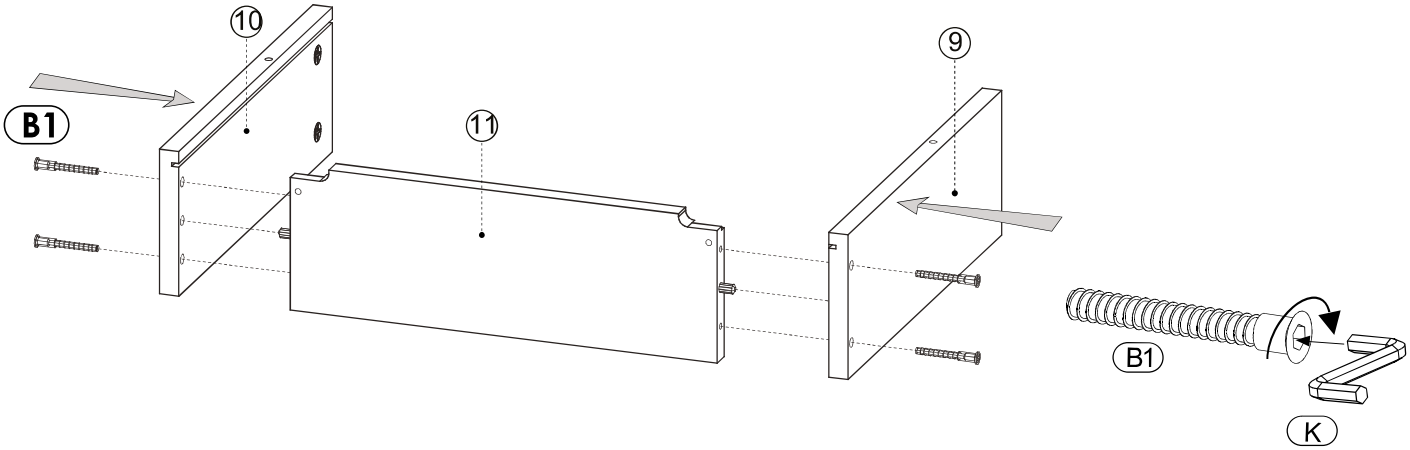

14

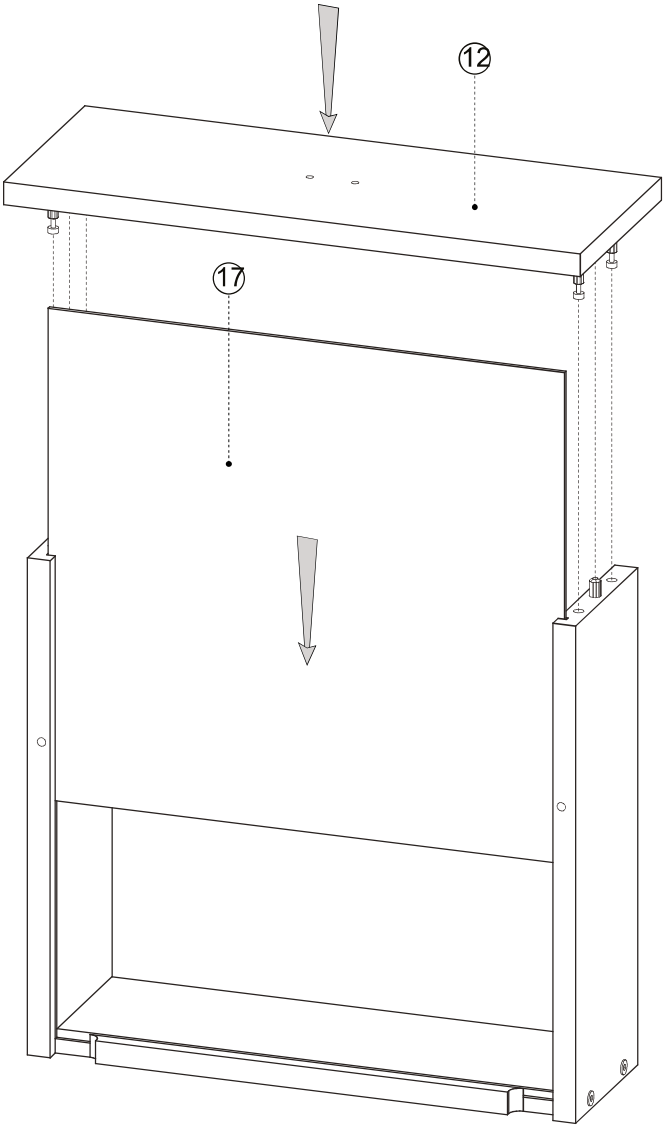

x2

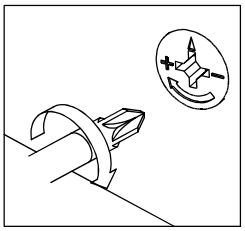

15

D0 3 x 15 mm x8	M1 x8

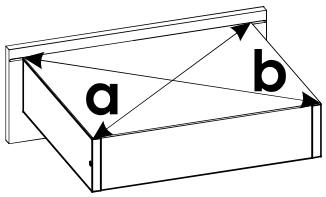

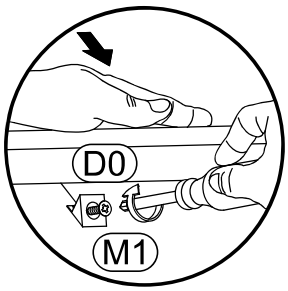

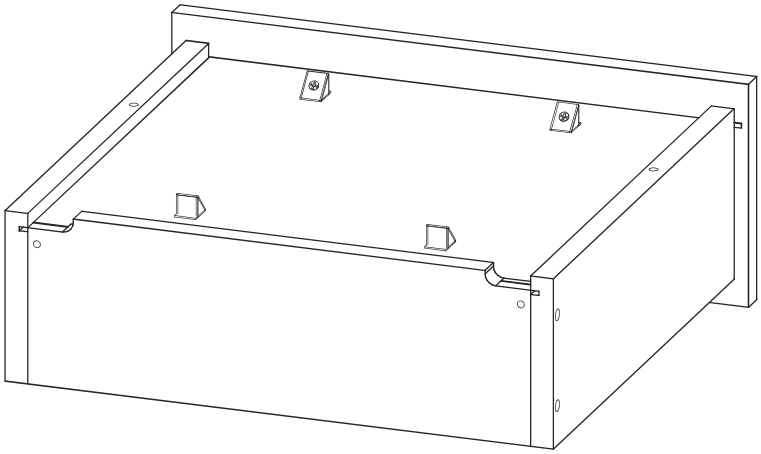

x2

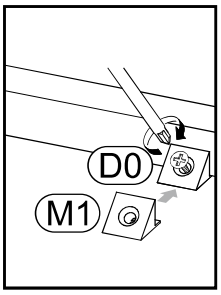

16

H2 4 x 22 mm x4	L6 x2	U3 x4

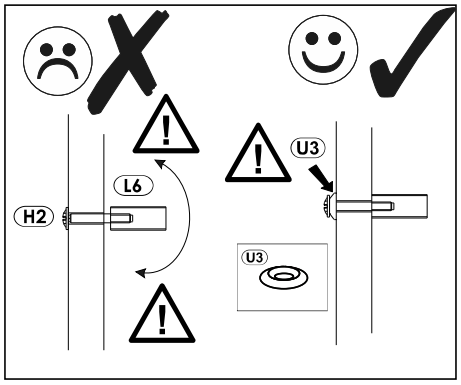

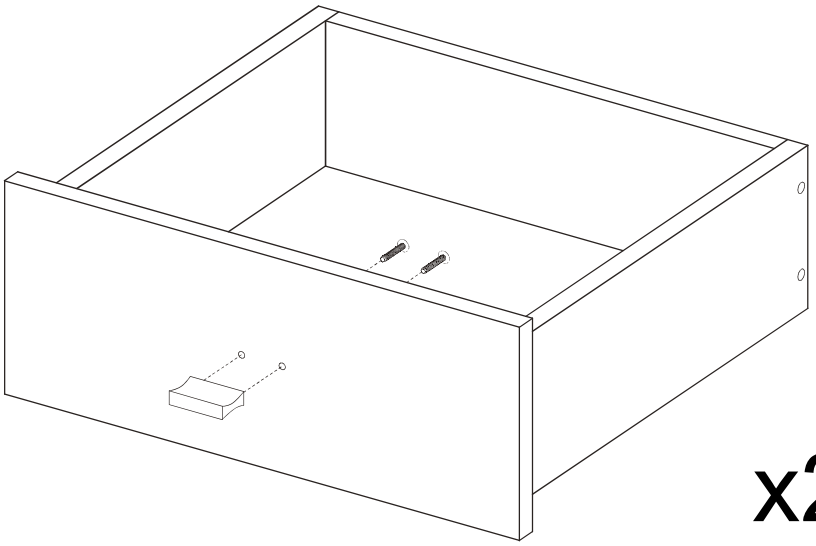

x2

17

B1	7 x 50 mm	x2
K	4mm	x1

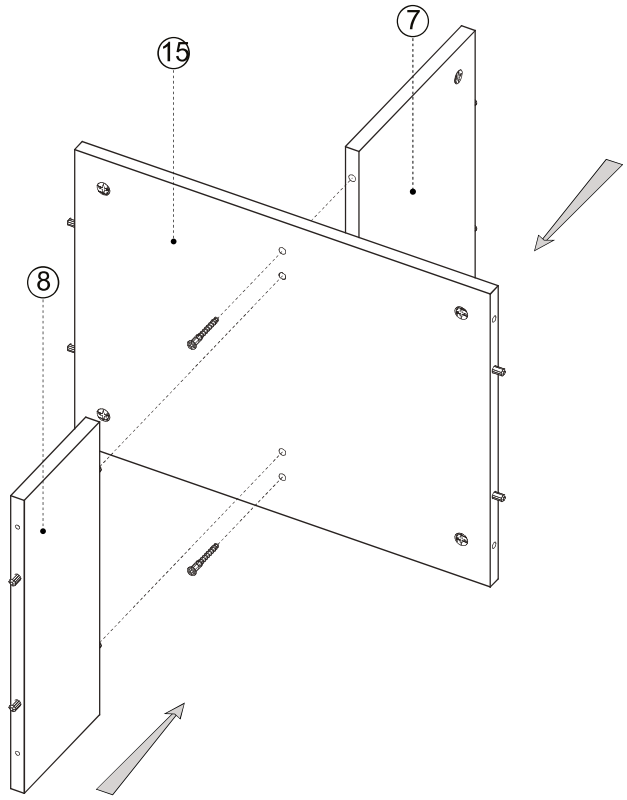

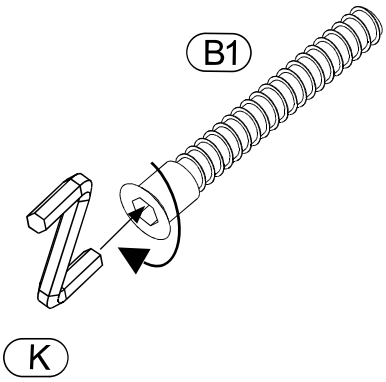

18

B1	7 x 50 mm	x2
K	4mm	x1

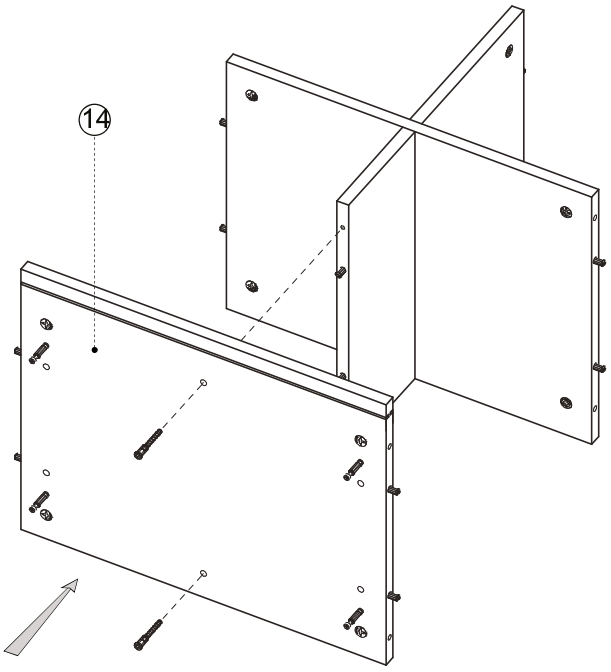

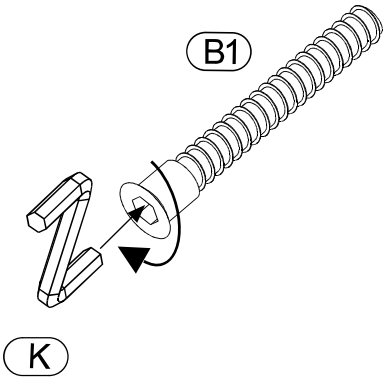

19

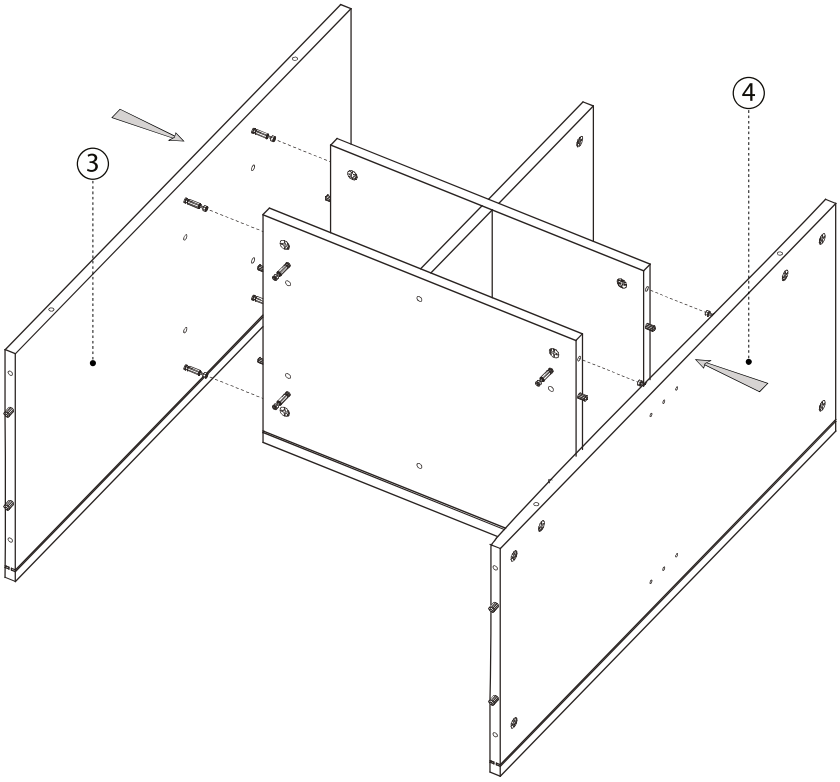

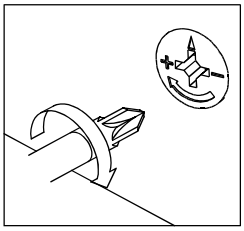

20

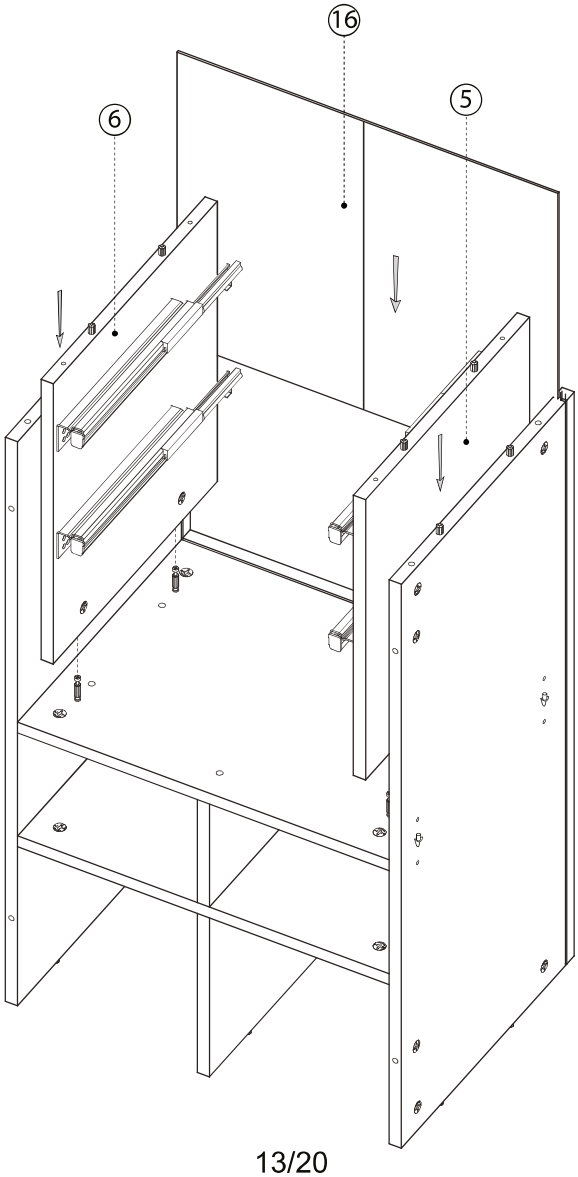

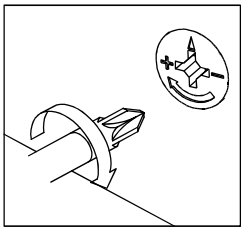

21

B1 7 x 50 mm x4	K x1 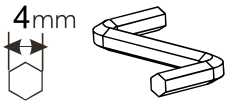

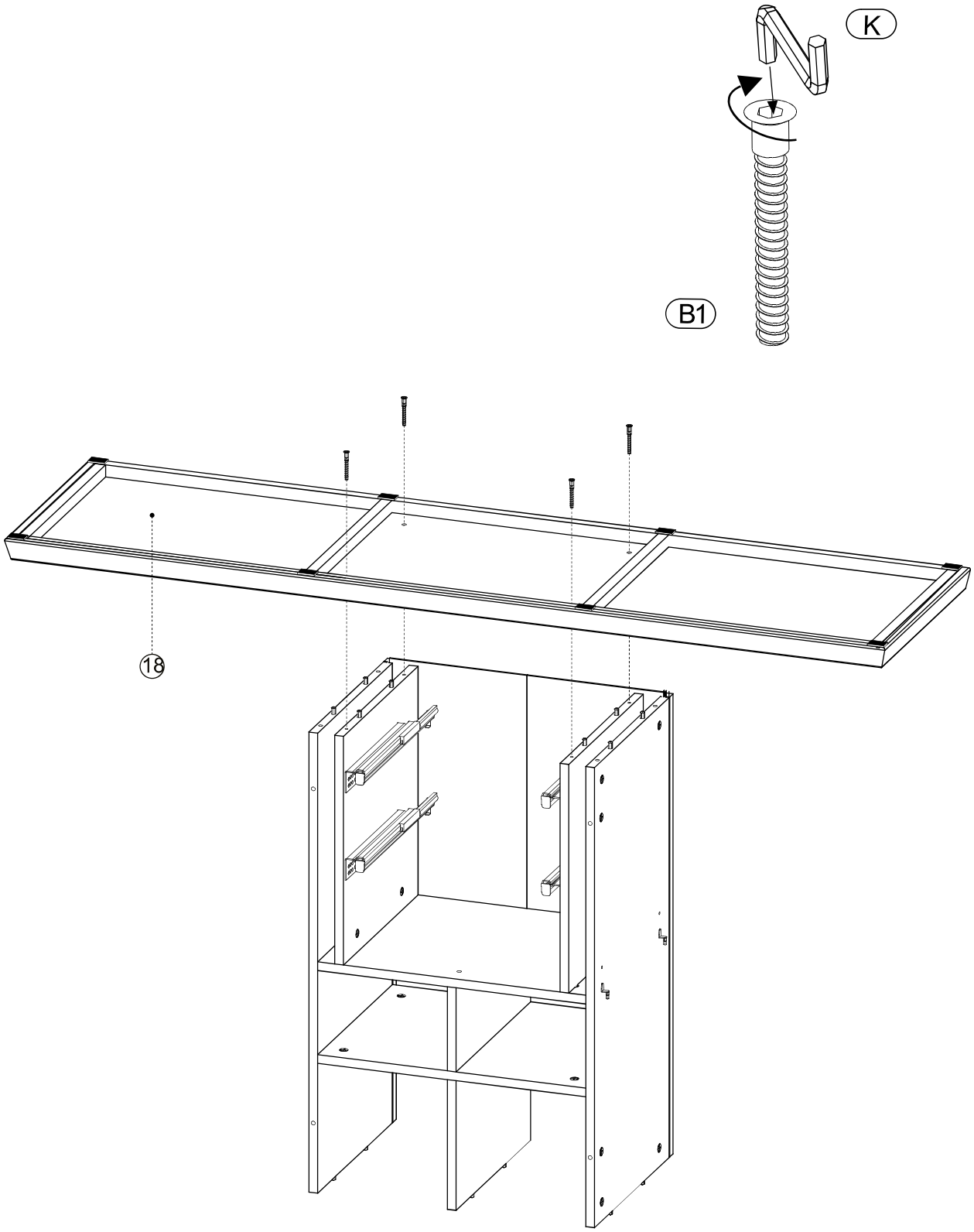

22

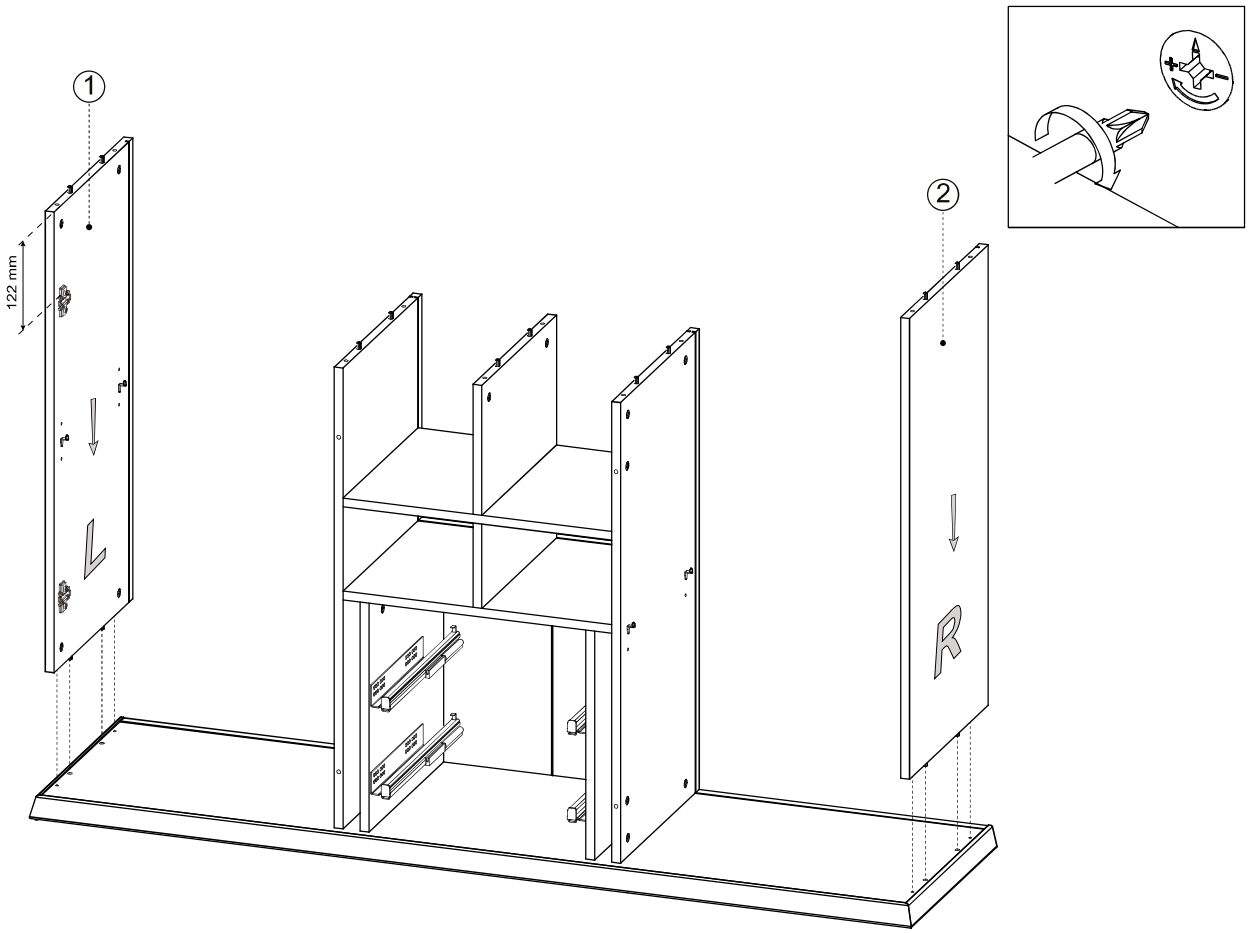

23

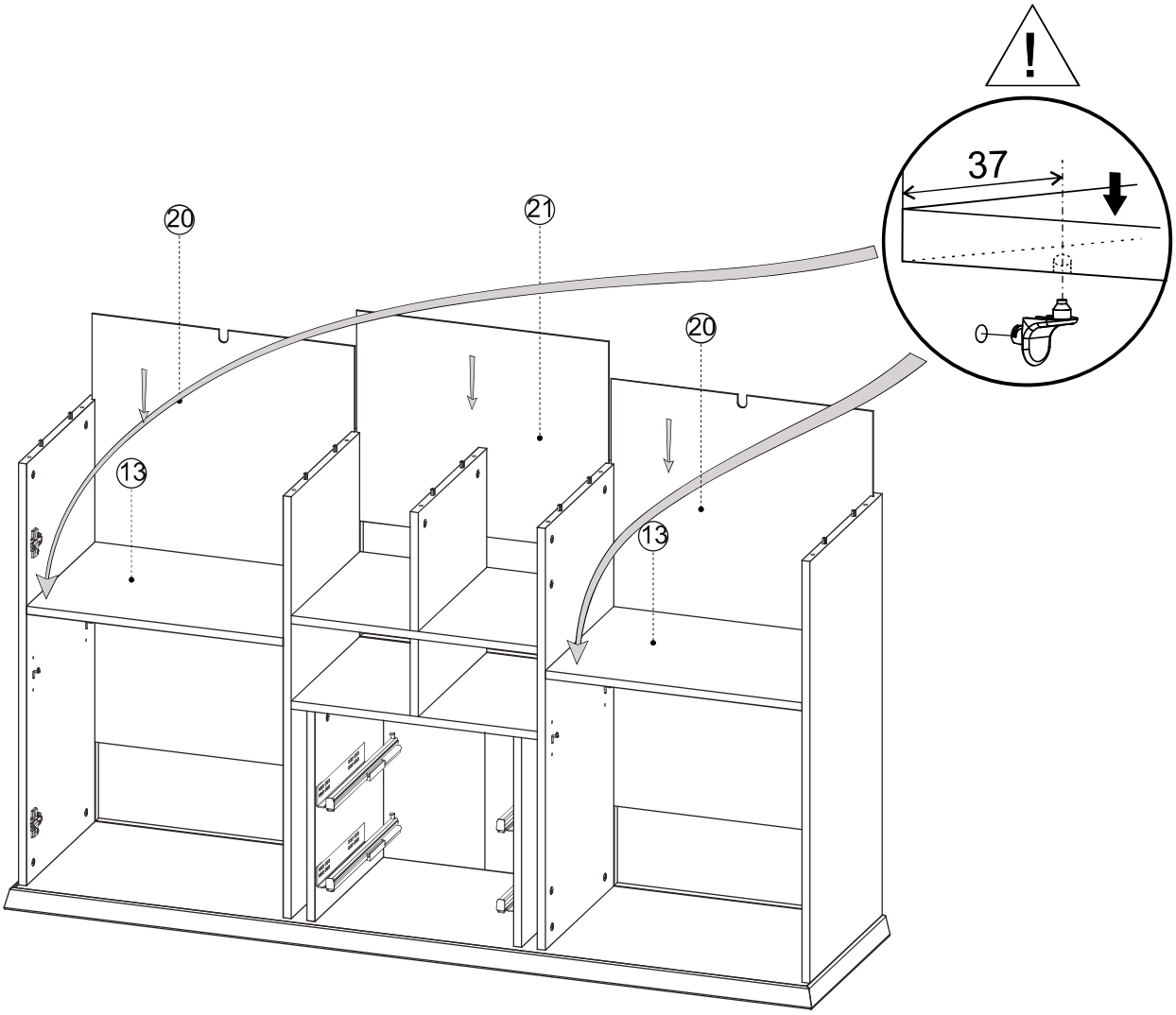

24

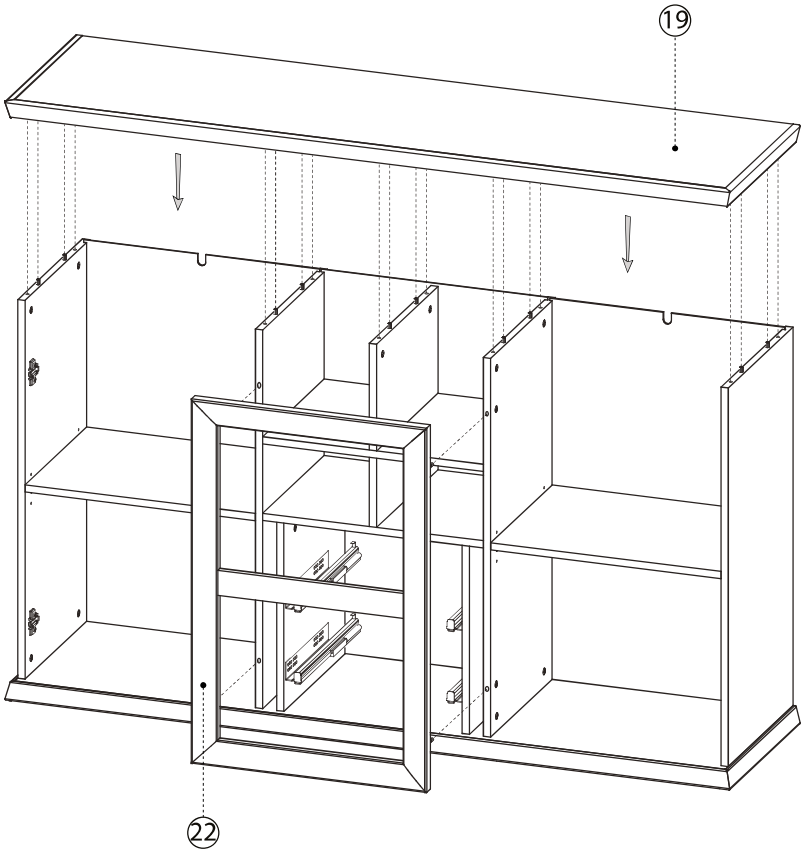

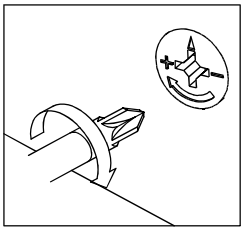

25

D0 3 x 15 mm x32	M1 x32

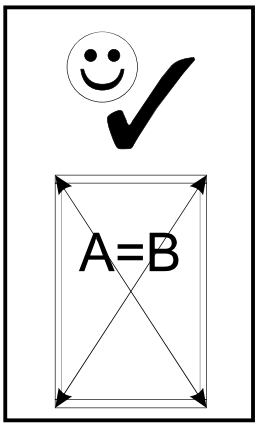

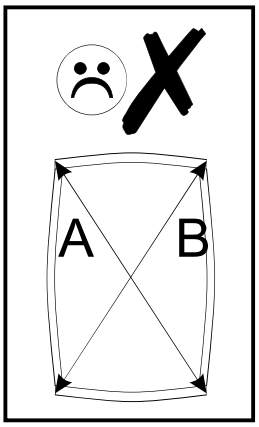

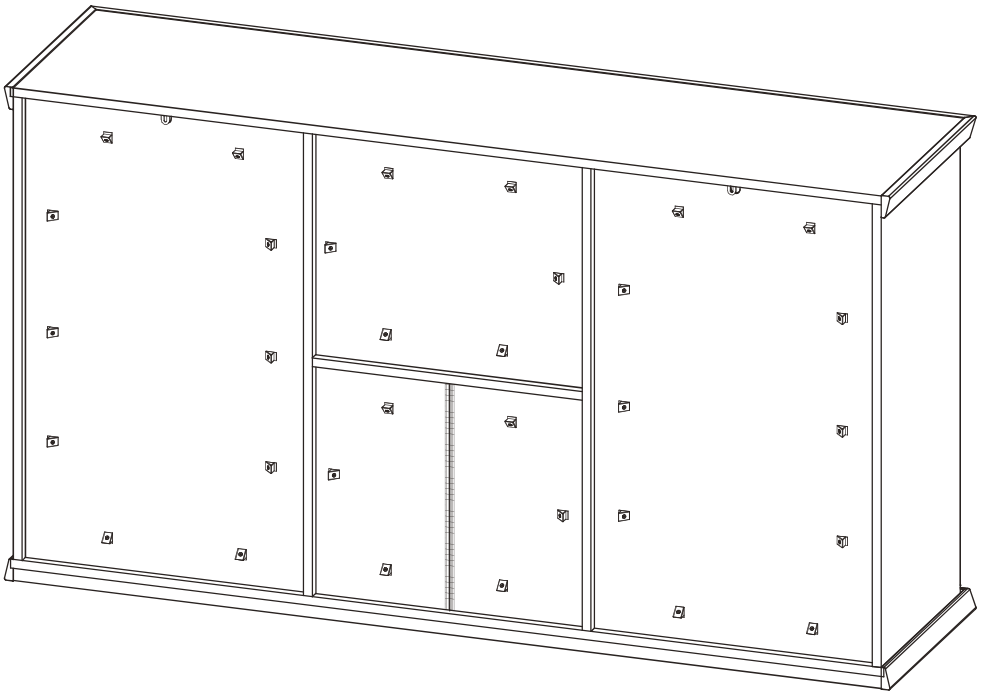

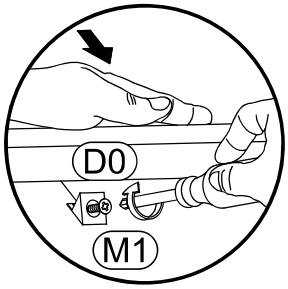

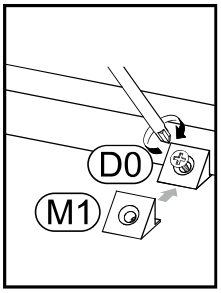

26

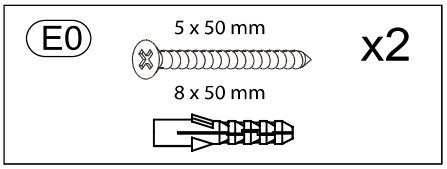

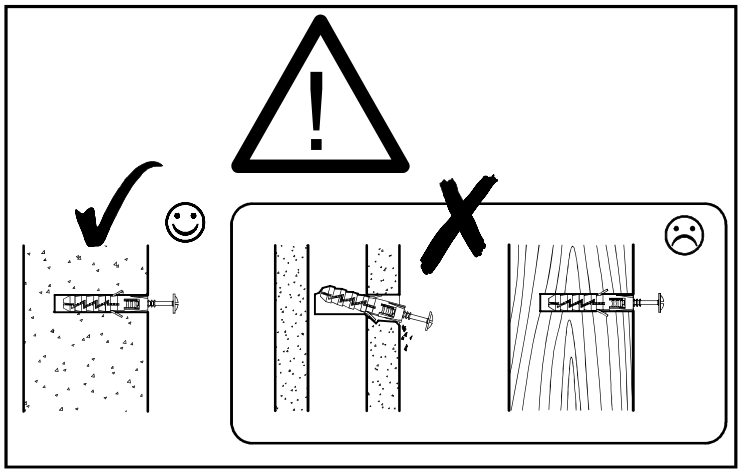

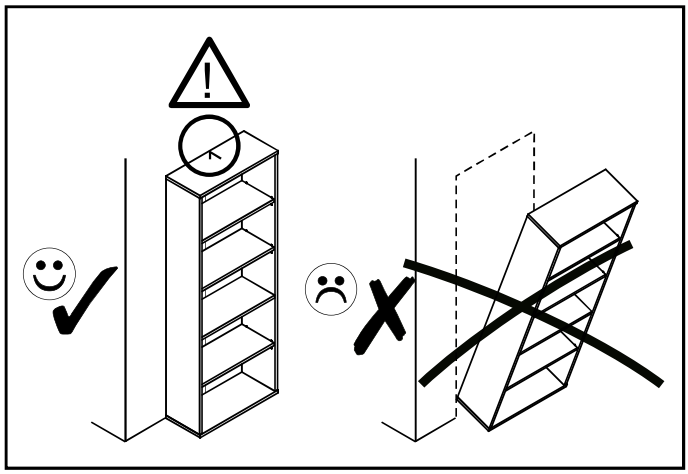

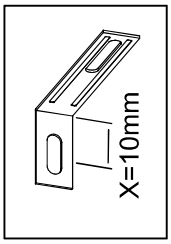

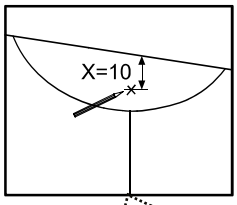

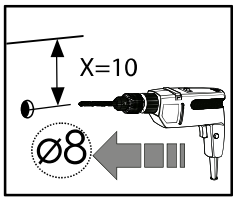

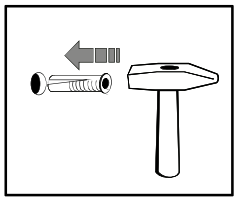

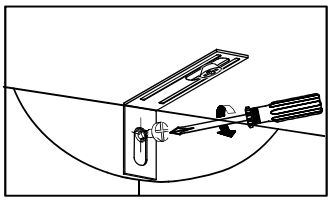

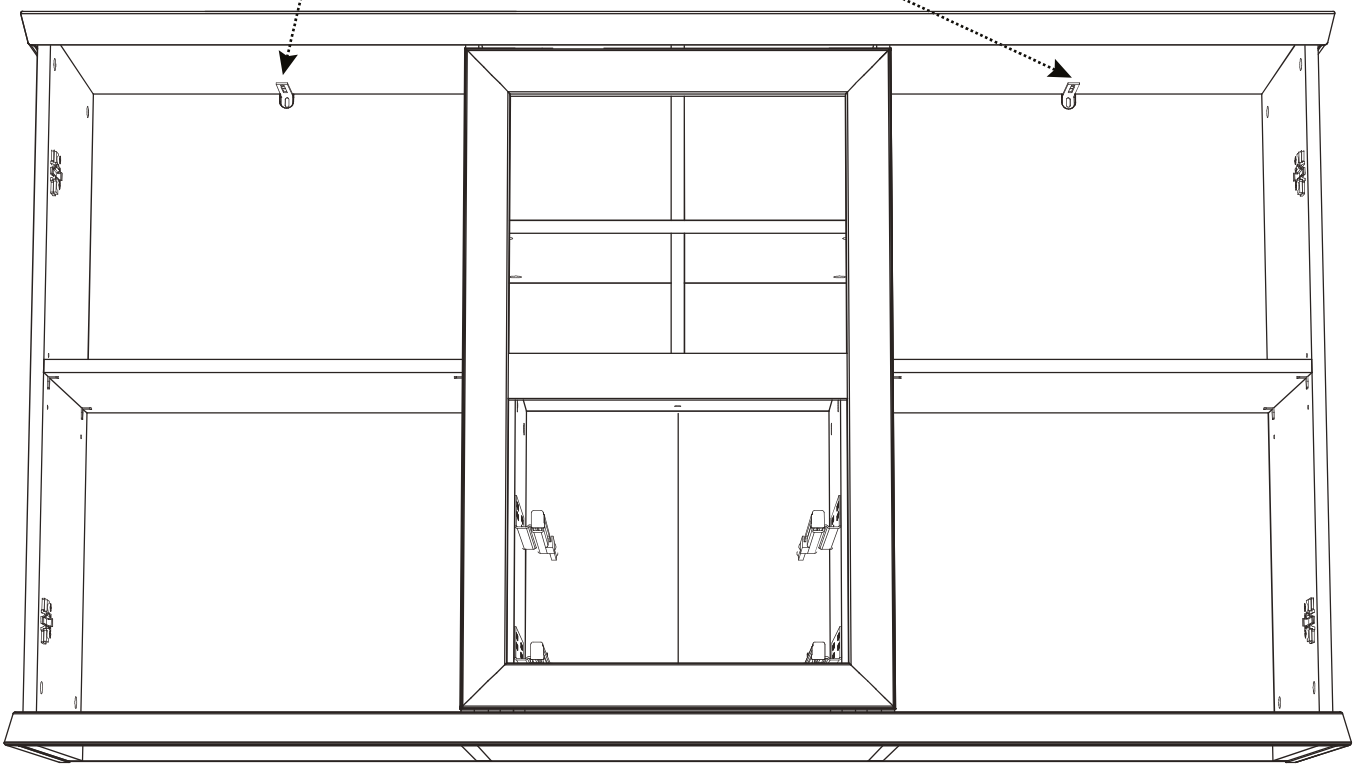

27

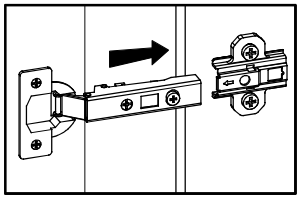

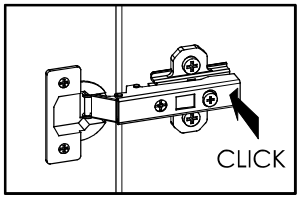

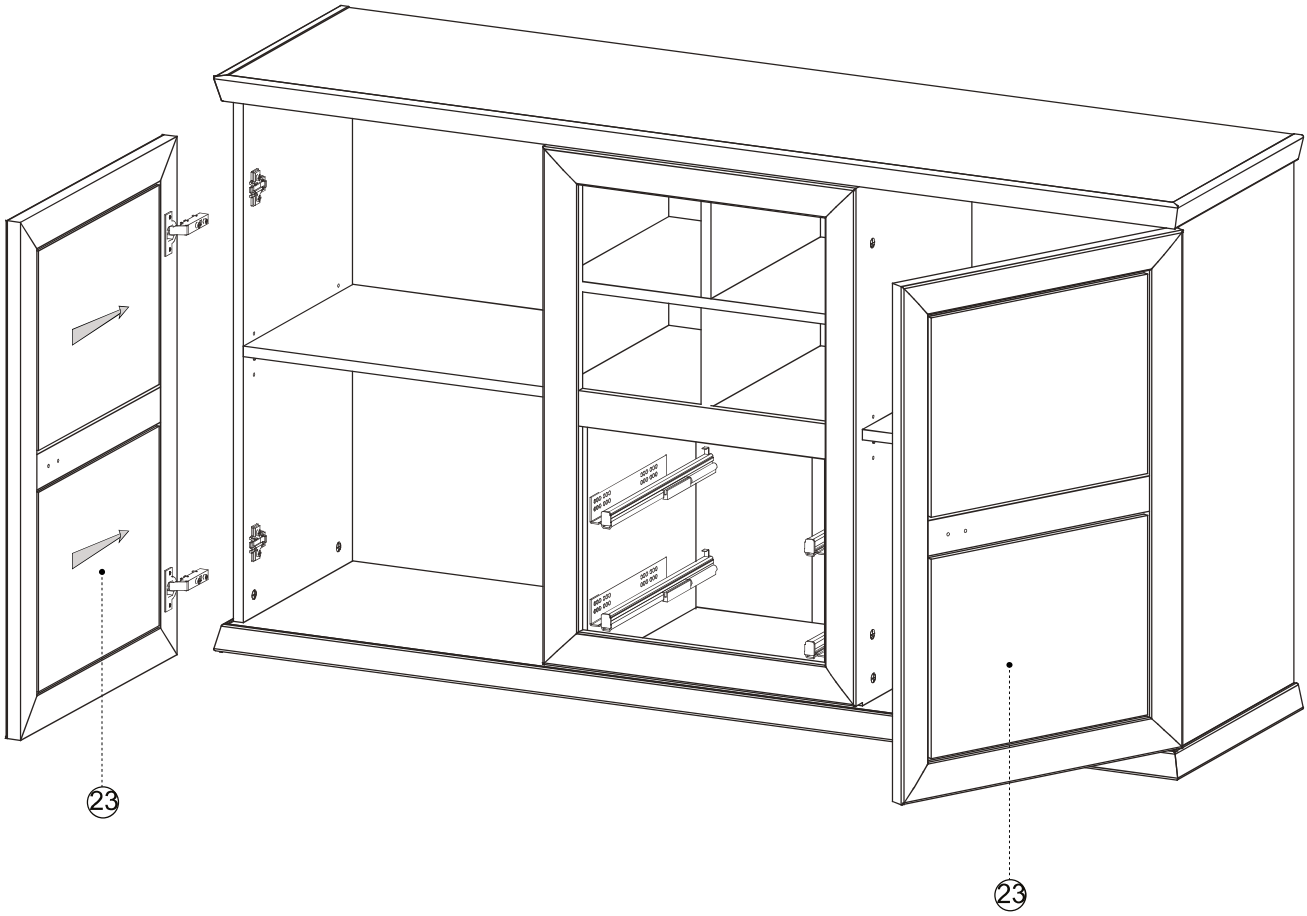

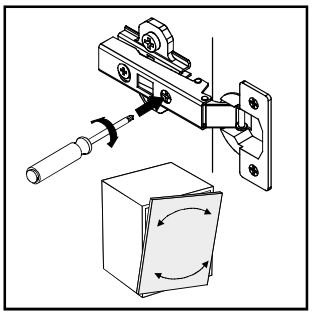

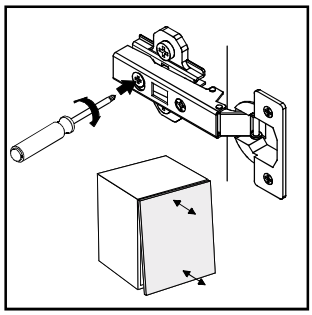

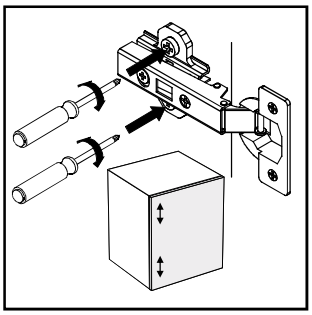

28

H2 4 x 22 mm x4	L6 x2	U3 x4

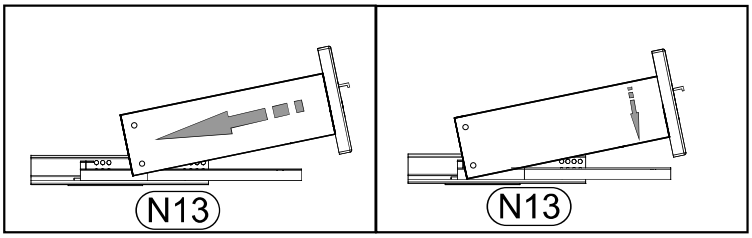

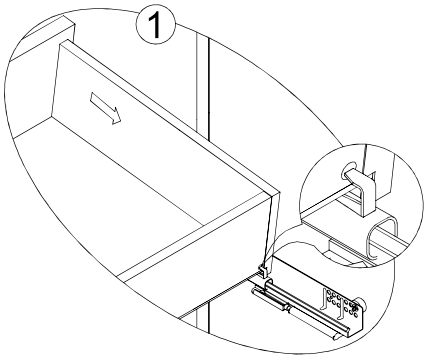

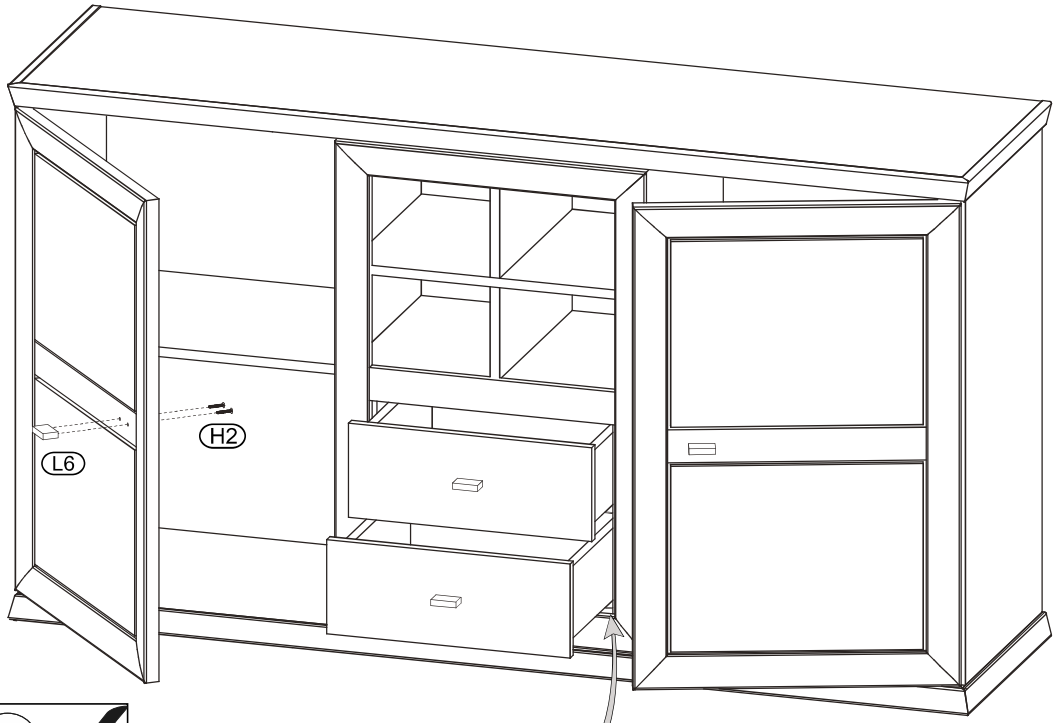

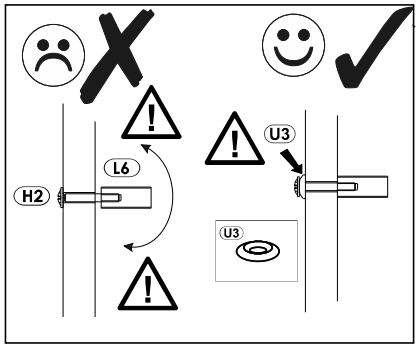

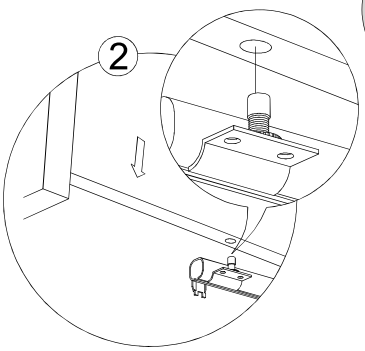

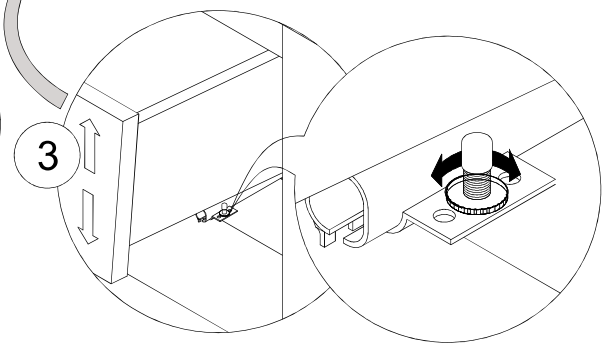

29

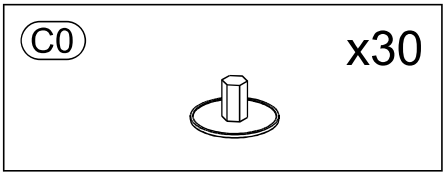
C0
x30

max

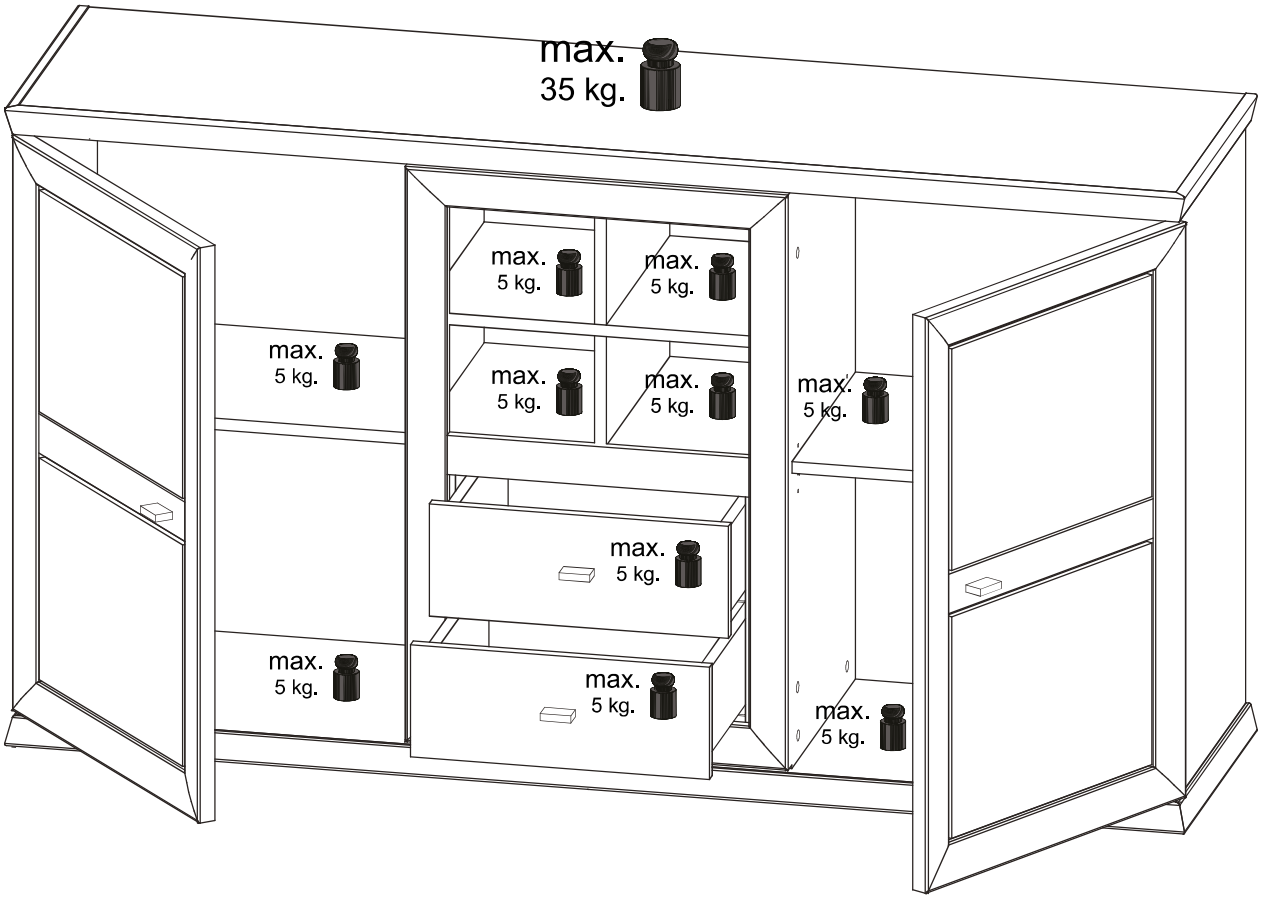
max.
35 kg.
max.
5 kg.
max.
5 kg.
max.
5 kg.
max.
5 kg.
max.
5 kg.
max.
5 kg.
max.
5 kg.
max.
5 kg.
max.
5 kg.
max.
5 kg.

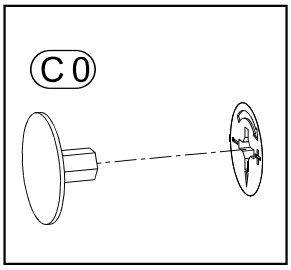
C0