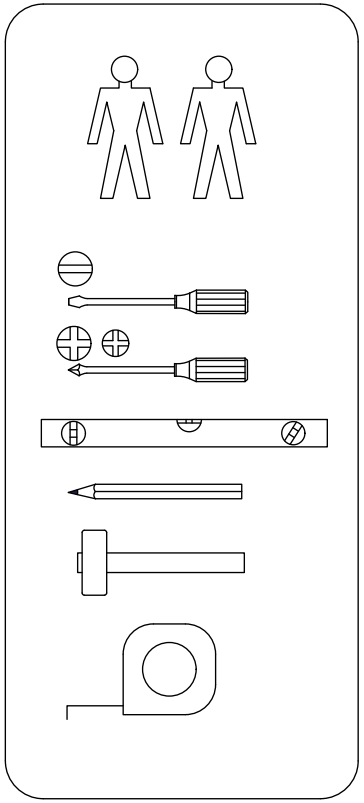

24270305/26
24270305/39
24270305/13

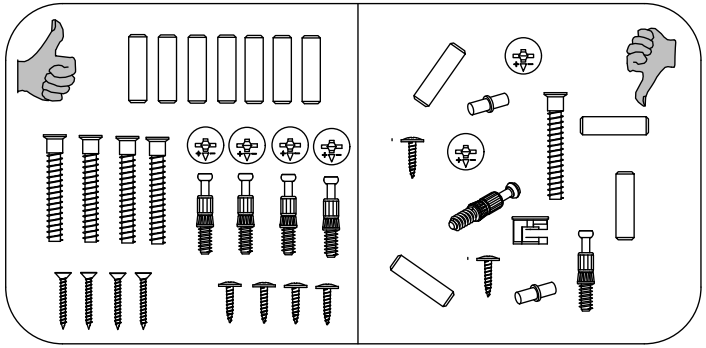

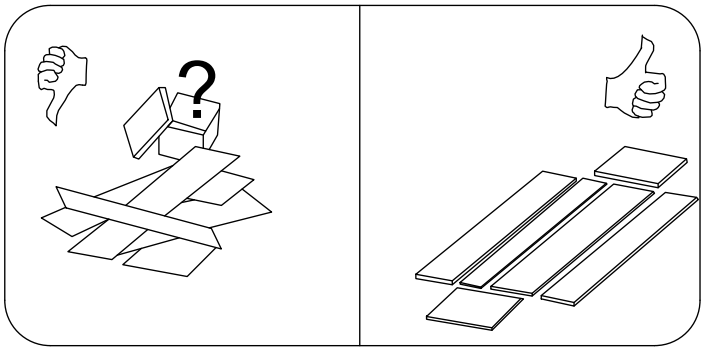

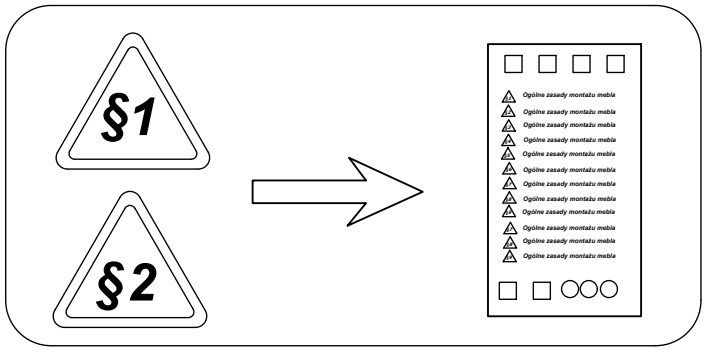
§1
§2
Ogólne zasady montażu mebla

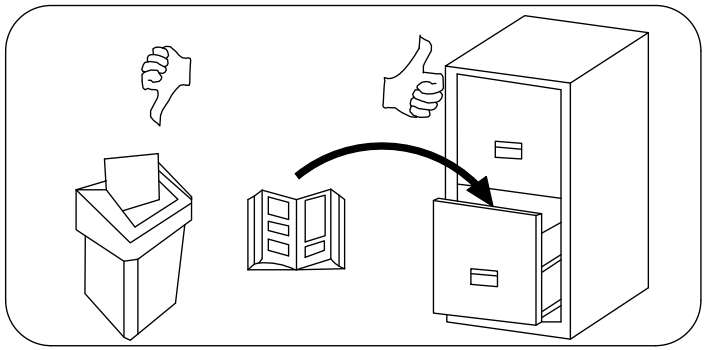

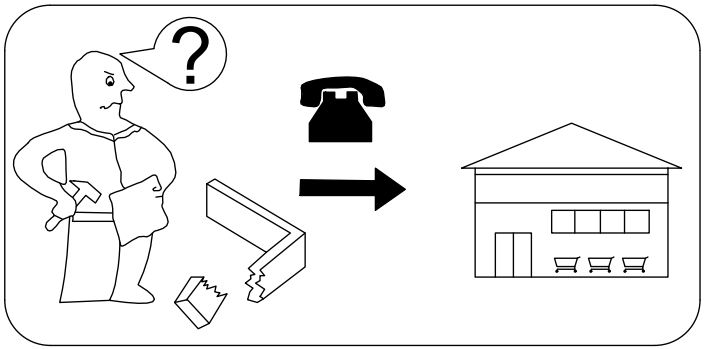

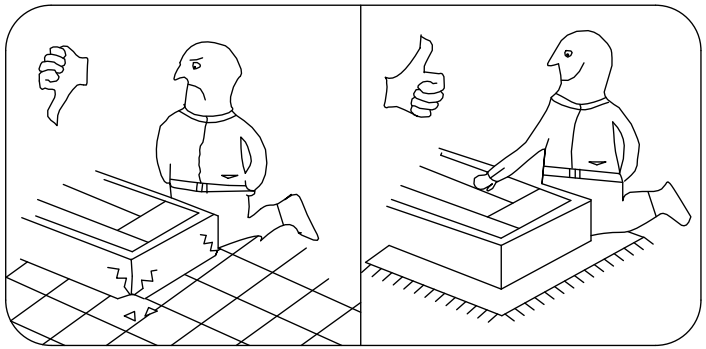

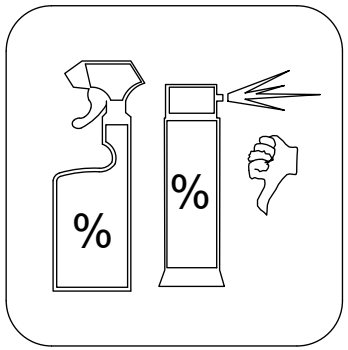
%
%

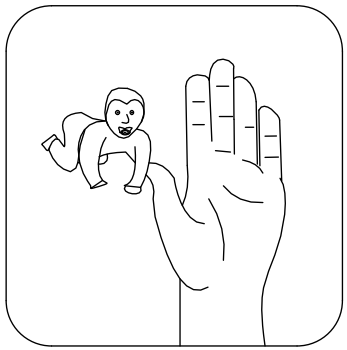

B1	B2	C1	C2	C3	C4	D
S655-0005	-.4	878	463	15	1	1/1

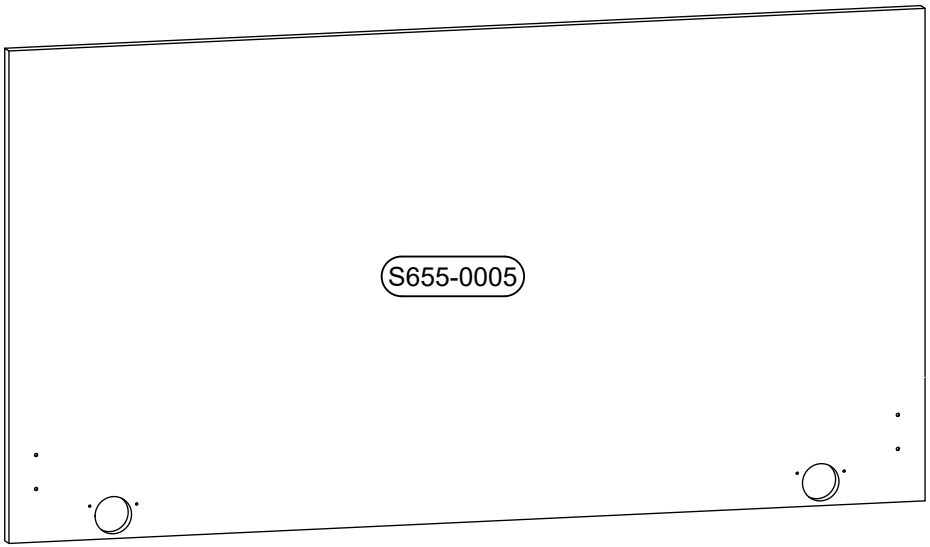

1:1

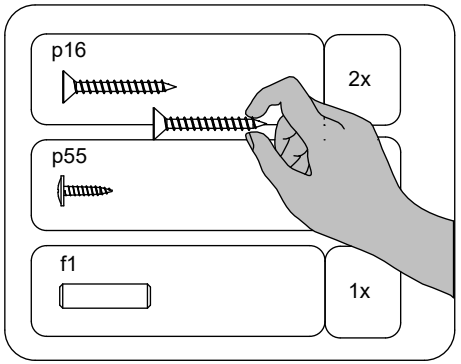

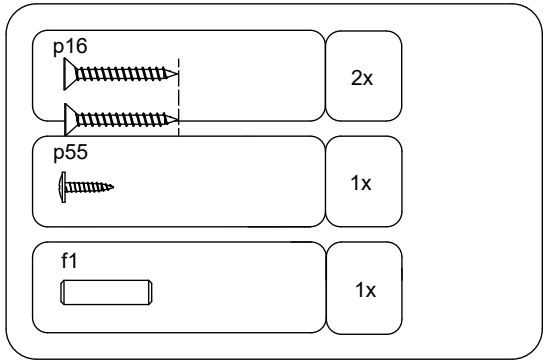

e69 Ø4.2x13.5 mm	4x
p51 Ø3.5x15 mm	4x
p5 Ø3.5x13 mm	10x
z28\4 Ø3x12 mm	2x

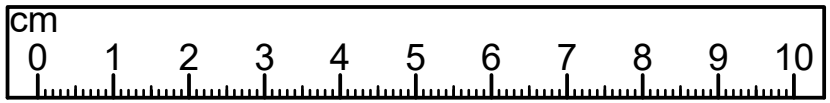

~~1:1~~

a211 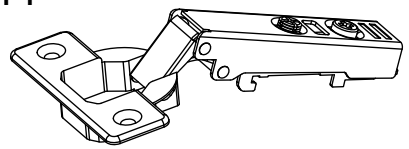	2x
b90\2 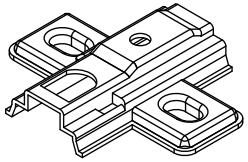	2x
m56\5 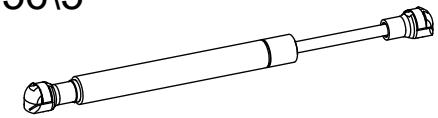 60 N	2x
m57\1 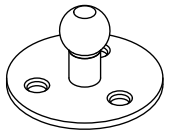	2x
m57\3 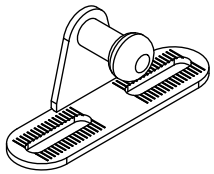	2x
z28\2 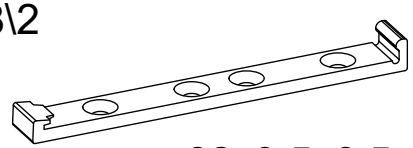 82x9.5x6.5 mm	1x
z28\5 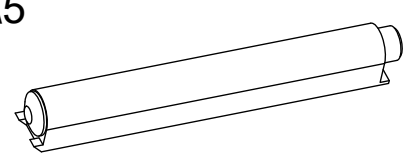	1x

1

a211	2x	m57\3	2x	p5 Ø3.5x13 mm	4x	p51 Ø3.5x15 mm	4x

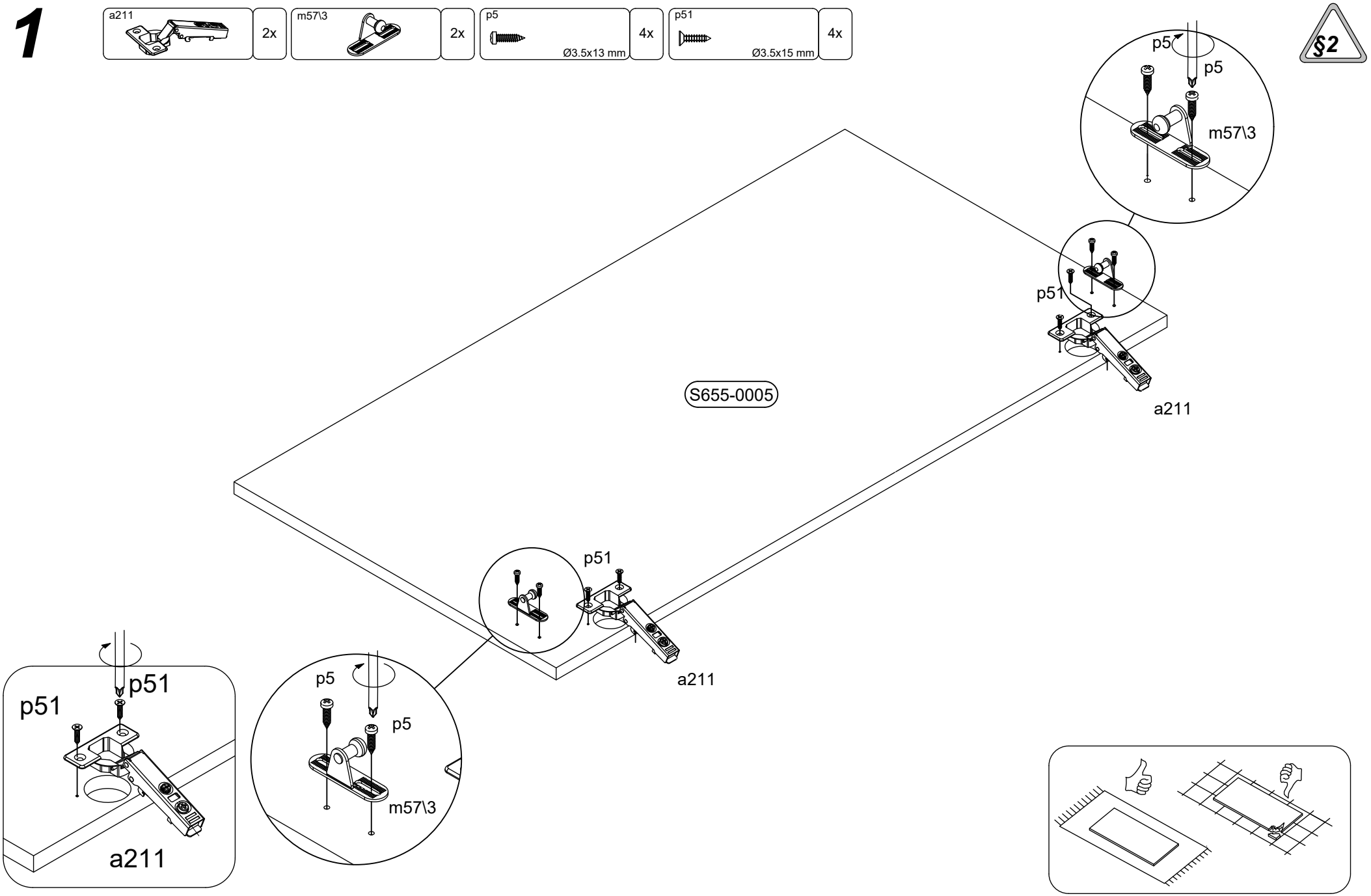

2A

b90\2	2x	e69 Ø4.2x13.5 mm	4x	m57\1	2x	p5 Ø3.5x13 mm	6x	z28\2 82x9.5x6.5 mm	1x	z28\4 Ø3x12 mm	2x	§6	§14

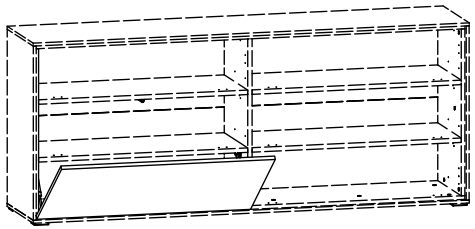

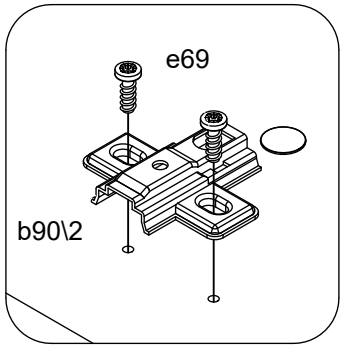

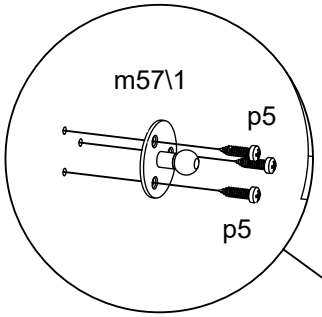

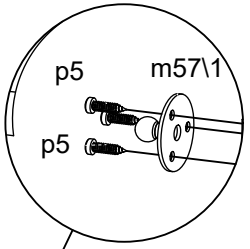

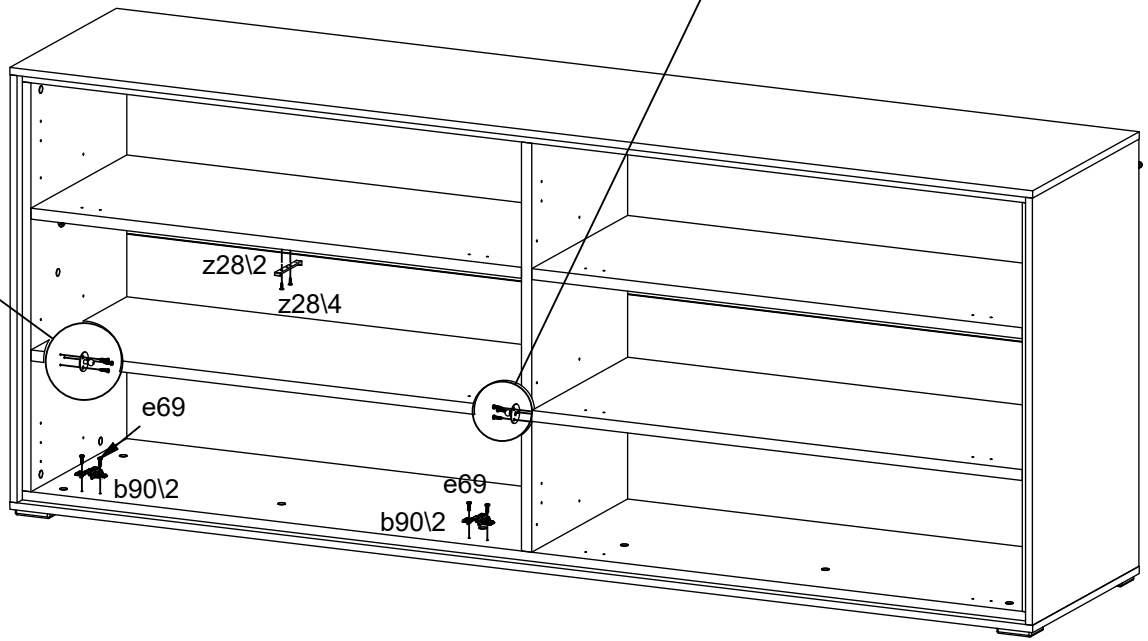

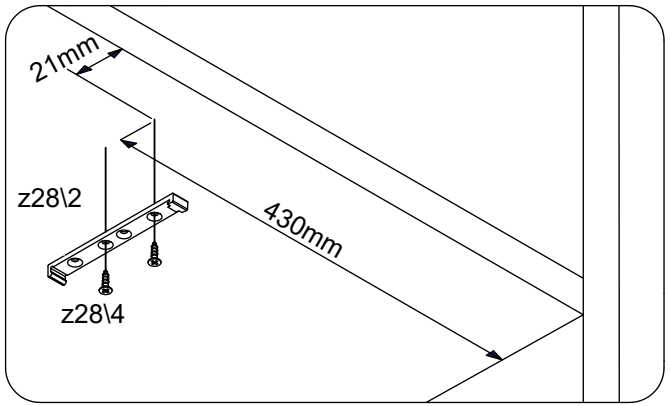

3A

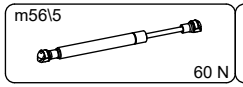
m56\5
60 N

2x

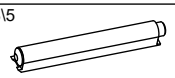
z28\5

1x

§6
§14

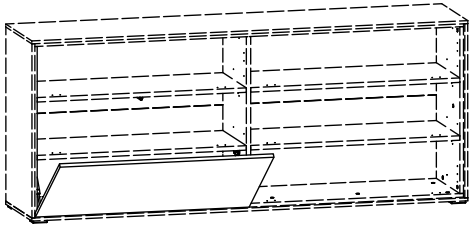

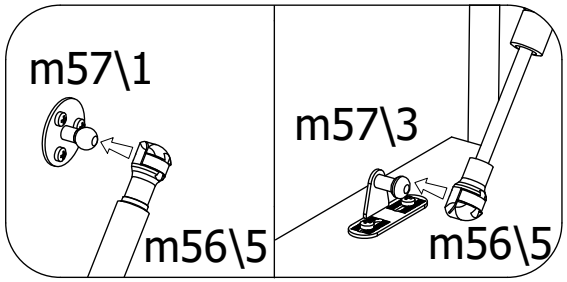
m57\1
m56\5
m57\3
m56\5

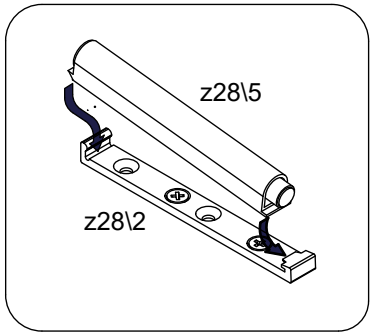
z28\5
z28\2

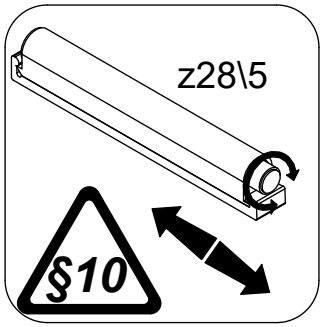
z28\5
§10

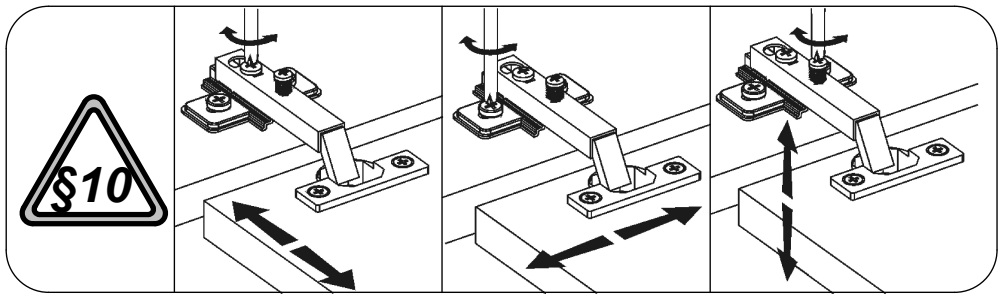
§10

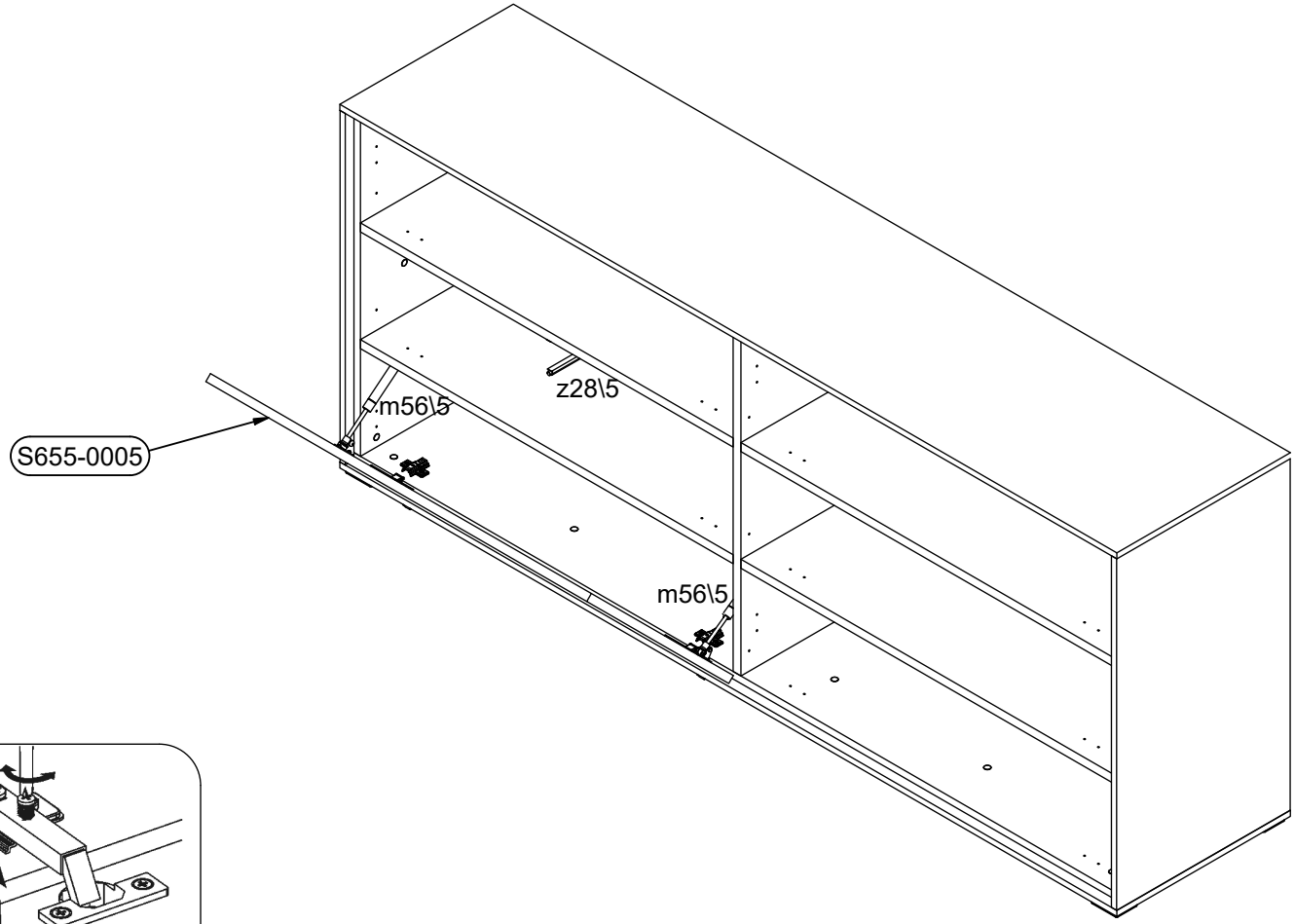
S655-0005
m56\5
z28\5
m56\5

2B

b90\2	2x	e69 Ø4.2x13.5 mm	4x	m57\1	2x	p5 Ø3.5x13 mm	6x	z28\2 82x9.5x6.5 mm	1x	z28\4 Ø3x12 mm	2x	§6	§14

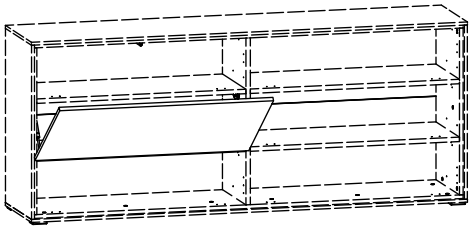

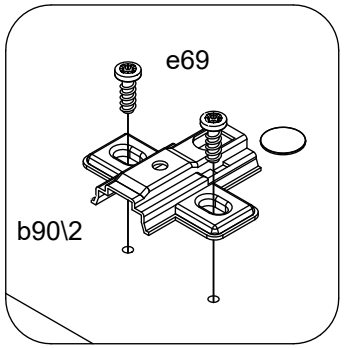

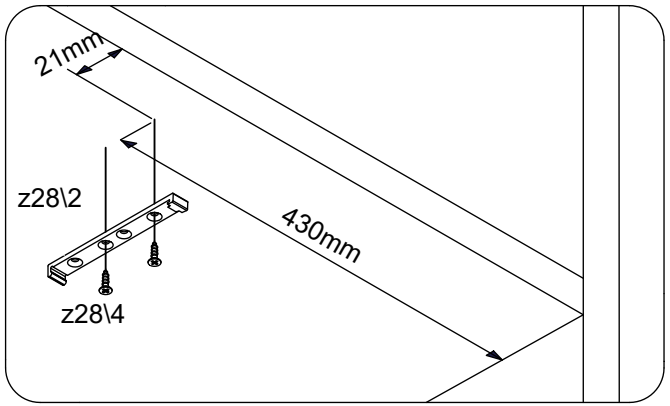

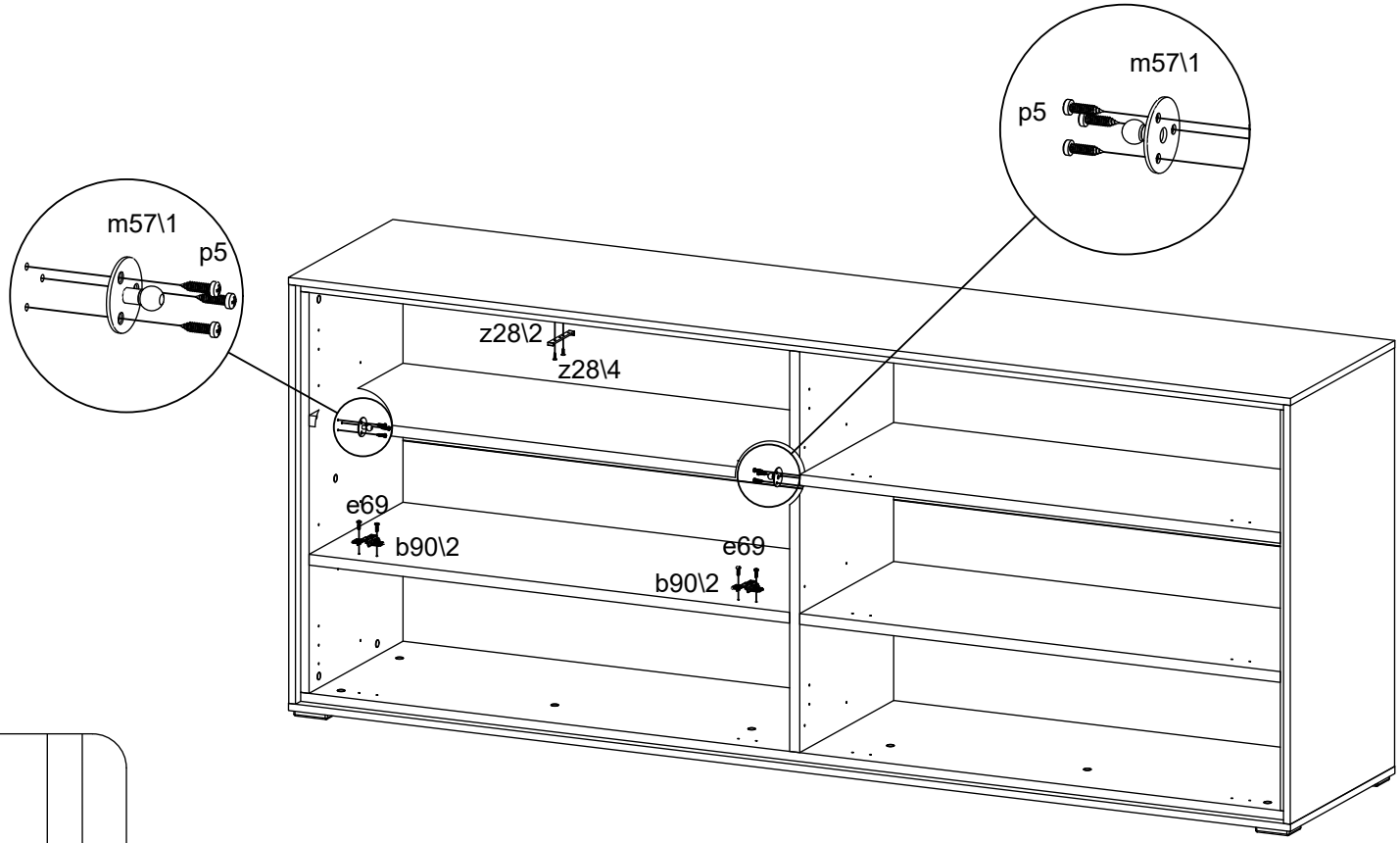

3B

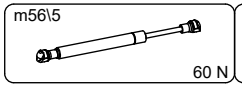
m56\5
60 N

2x

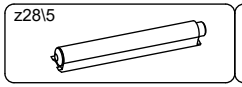
z28\5

1x

§6
§14

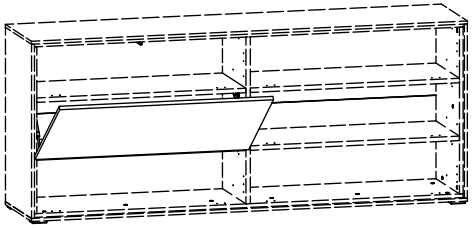

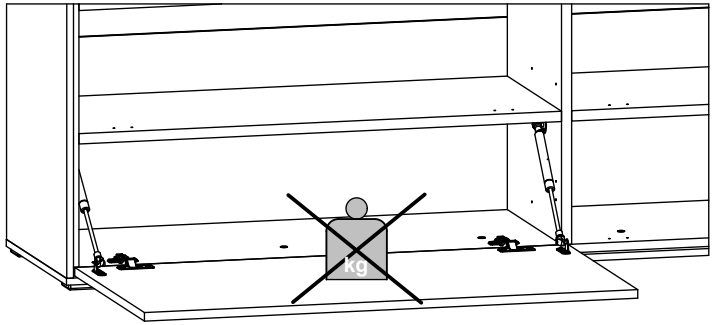
kg

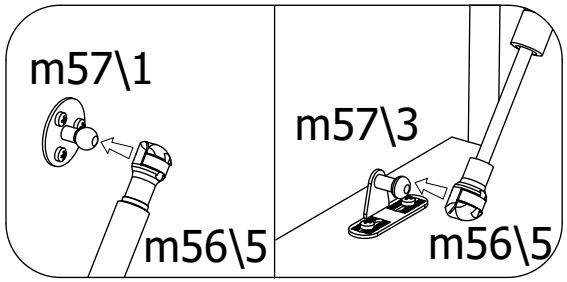
m57\1
m56\5
m57\3
m56\5

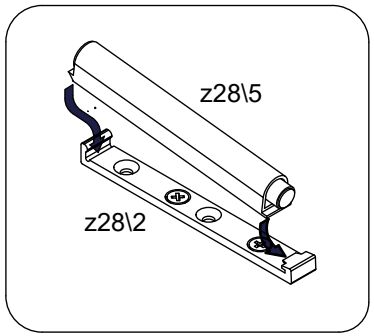
z28\5
z28\2

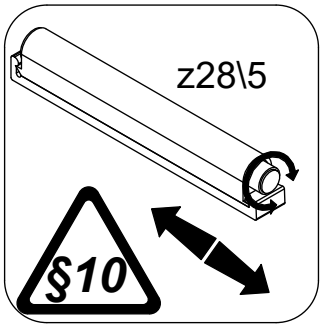
z28\5
§10

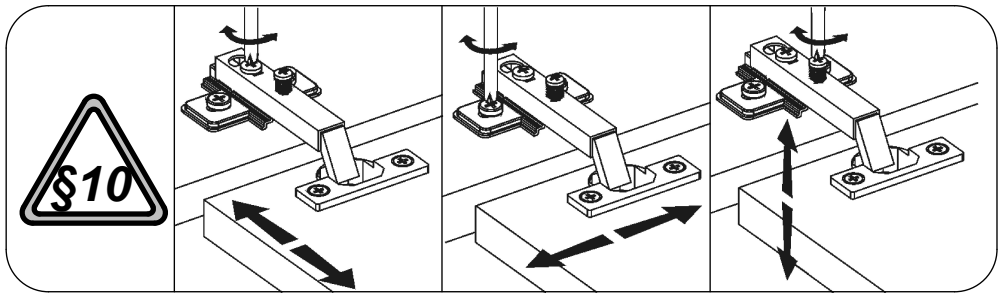
§10

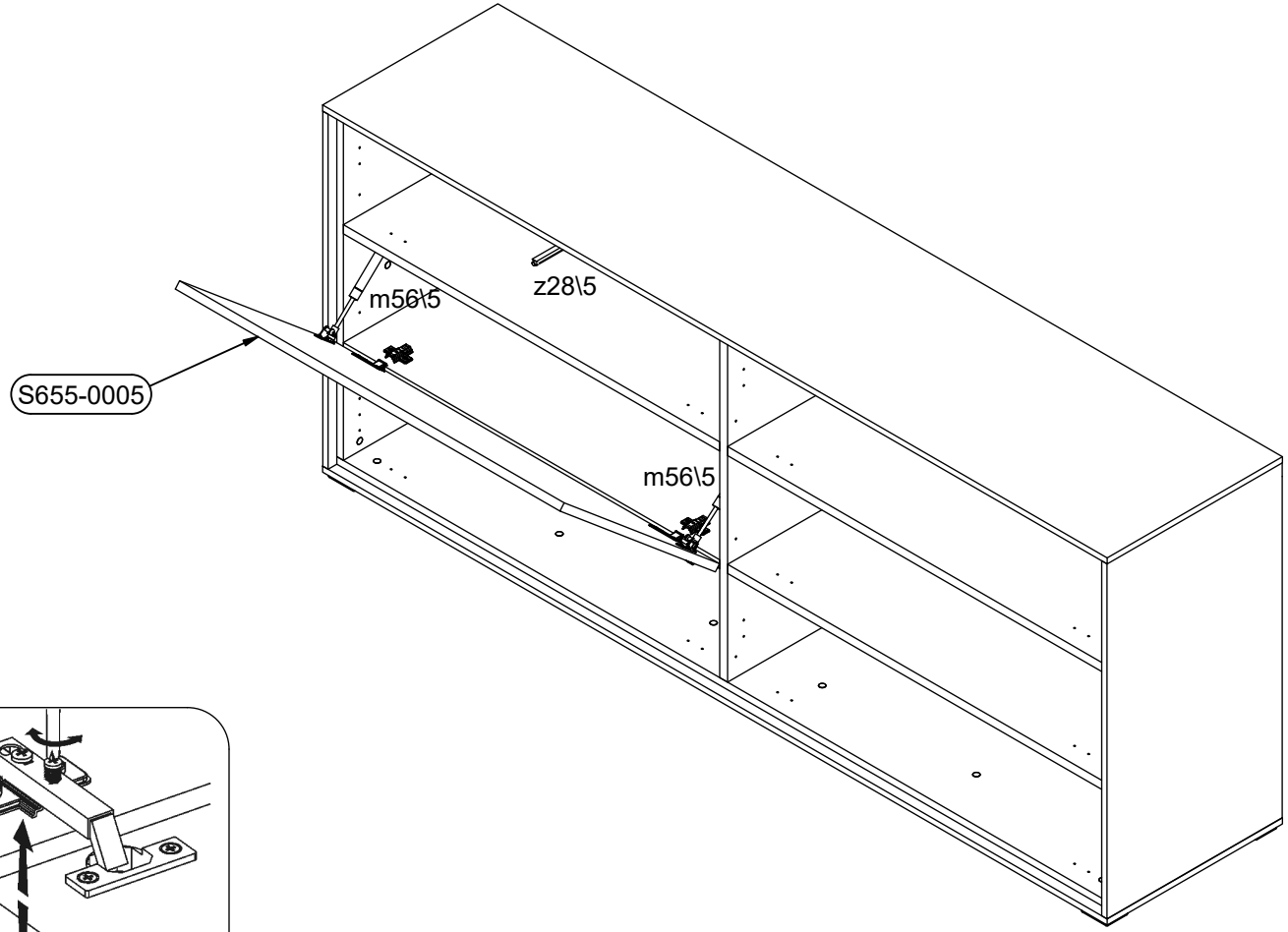
S655-0005
m56\5
z28\5
m56\5