WOHNLING®

Möbel zum Wohlfühlen

WL6.069

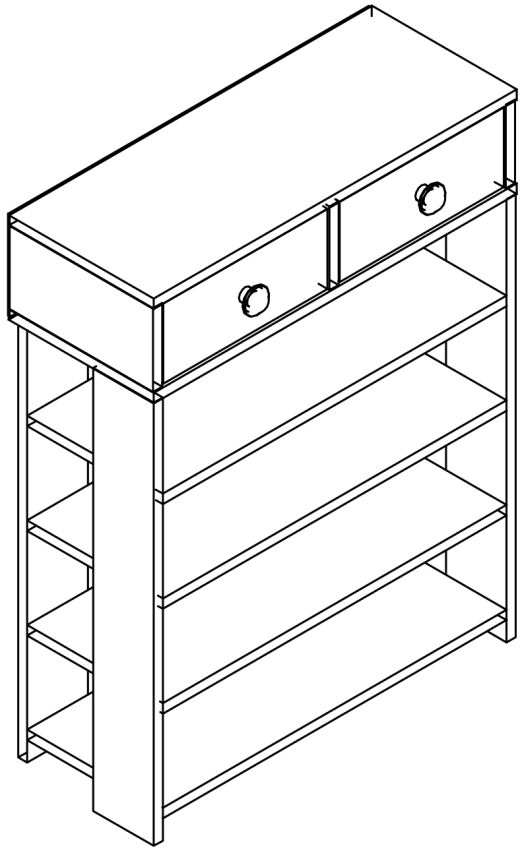

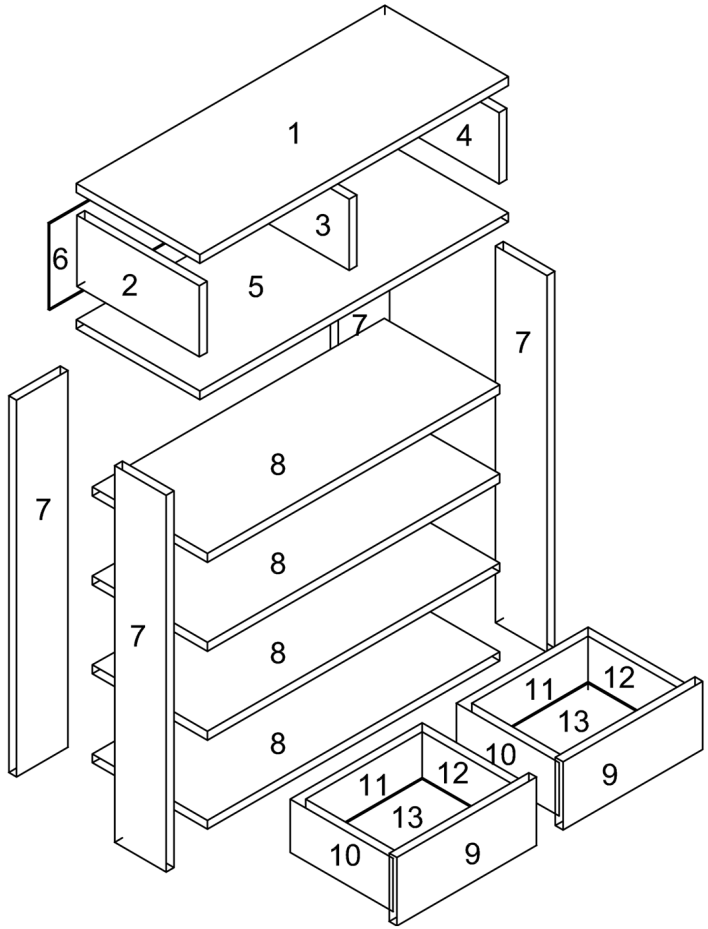

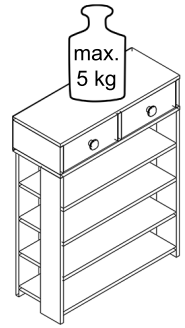

K 40pcs

A 28pcs

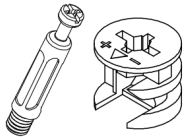

B 16pcs

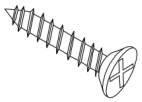

3.5x15mm

C 40pcs

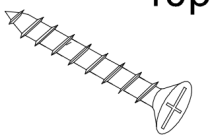

3.5x35mm

D 2pcs

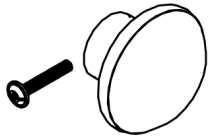

E 6pcs

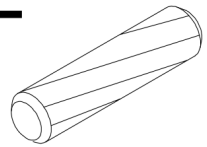

8x40mm

F 2pcs

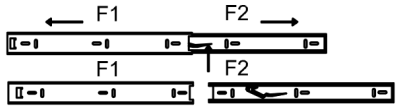

G 1pcs

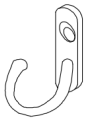

H 4pcs

I 2pcs

J 20pcs

1

Bx8
F1x4

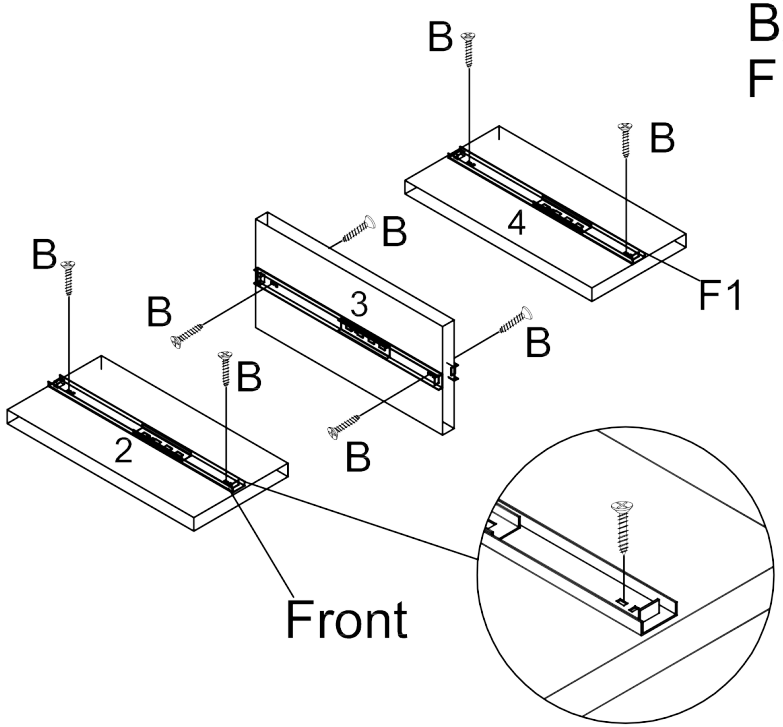

2

Ax6
Ex3

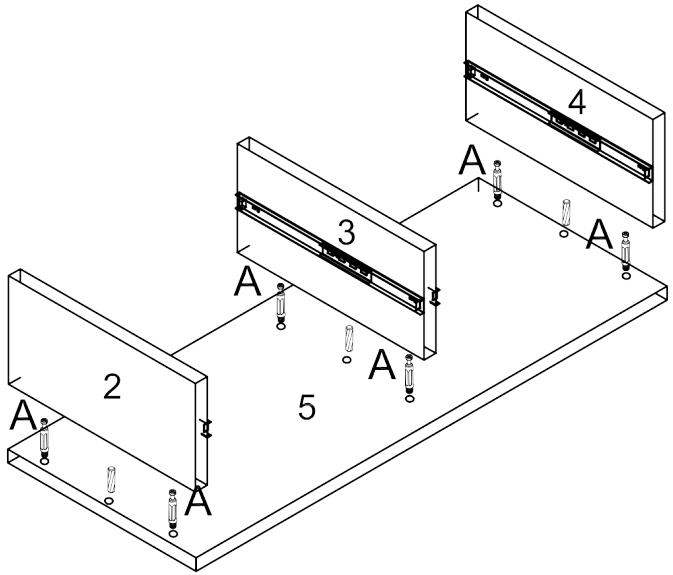

3

Ax6
Ex3

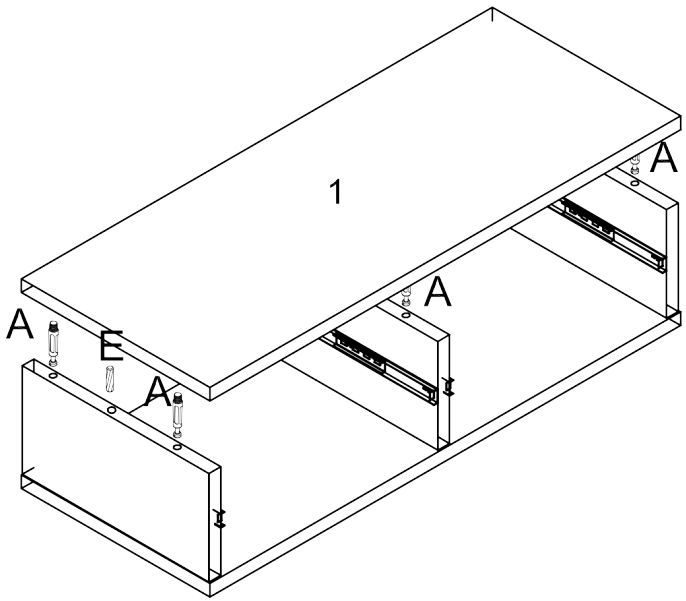

4

Jx20

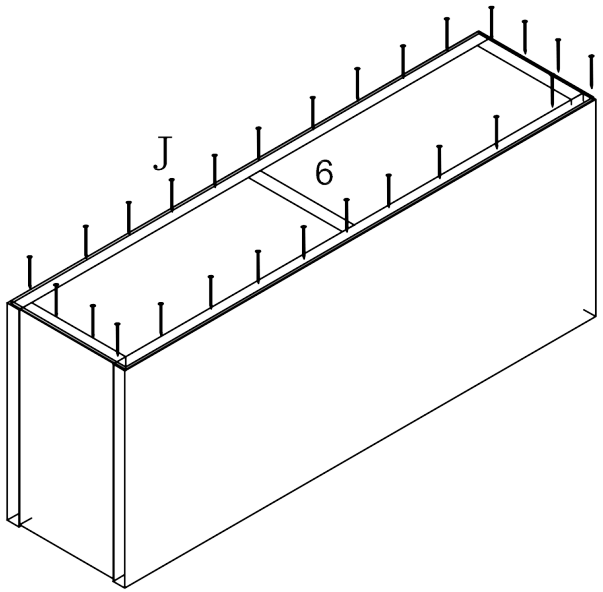

5

Cx16
Kx16

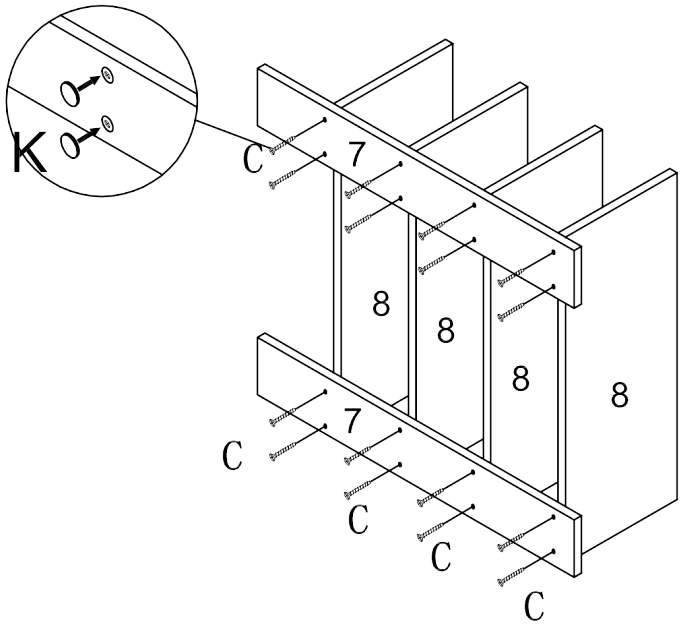

6

Cx16
Kx16

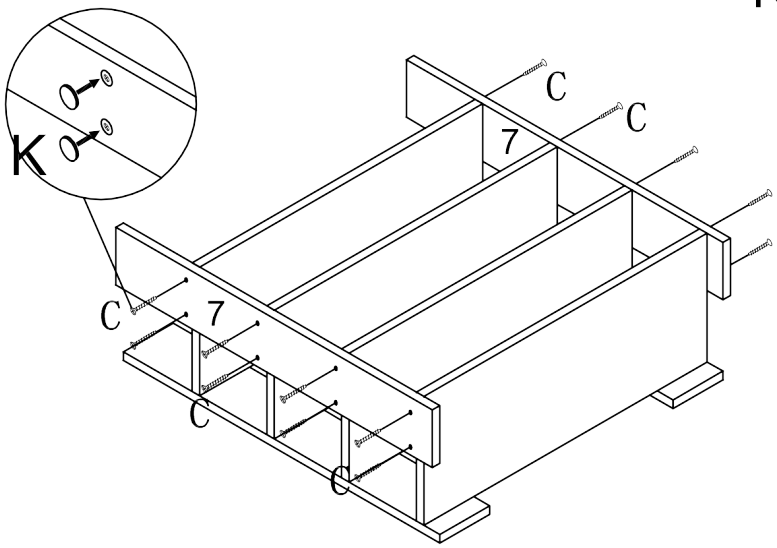

7

Ax8
Kx8

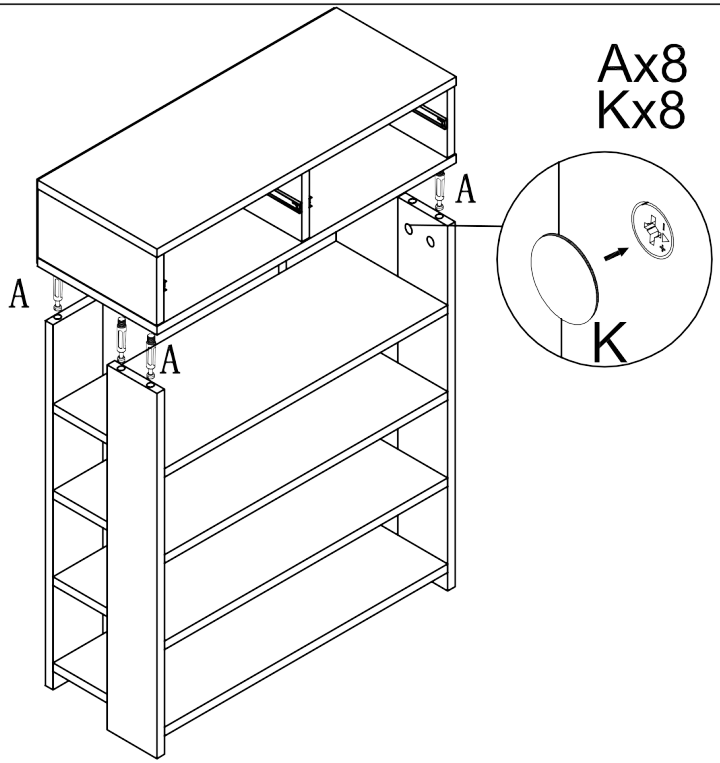

8

Ax8
Bx8
Cx8
Dx2
F2x4

X2

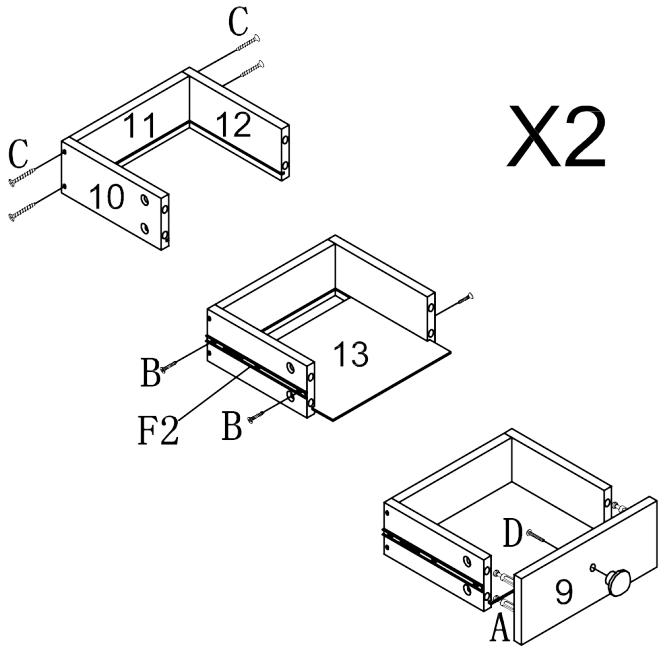

9
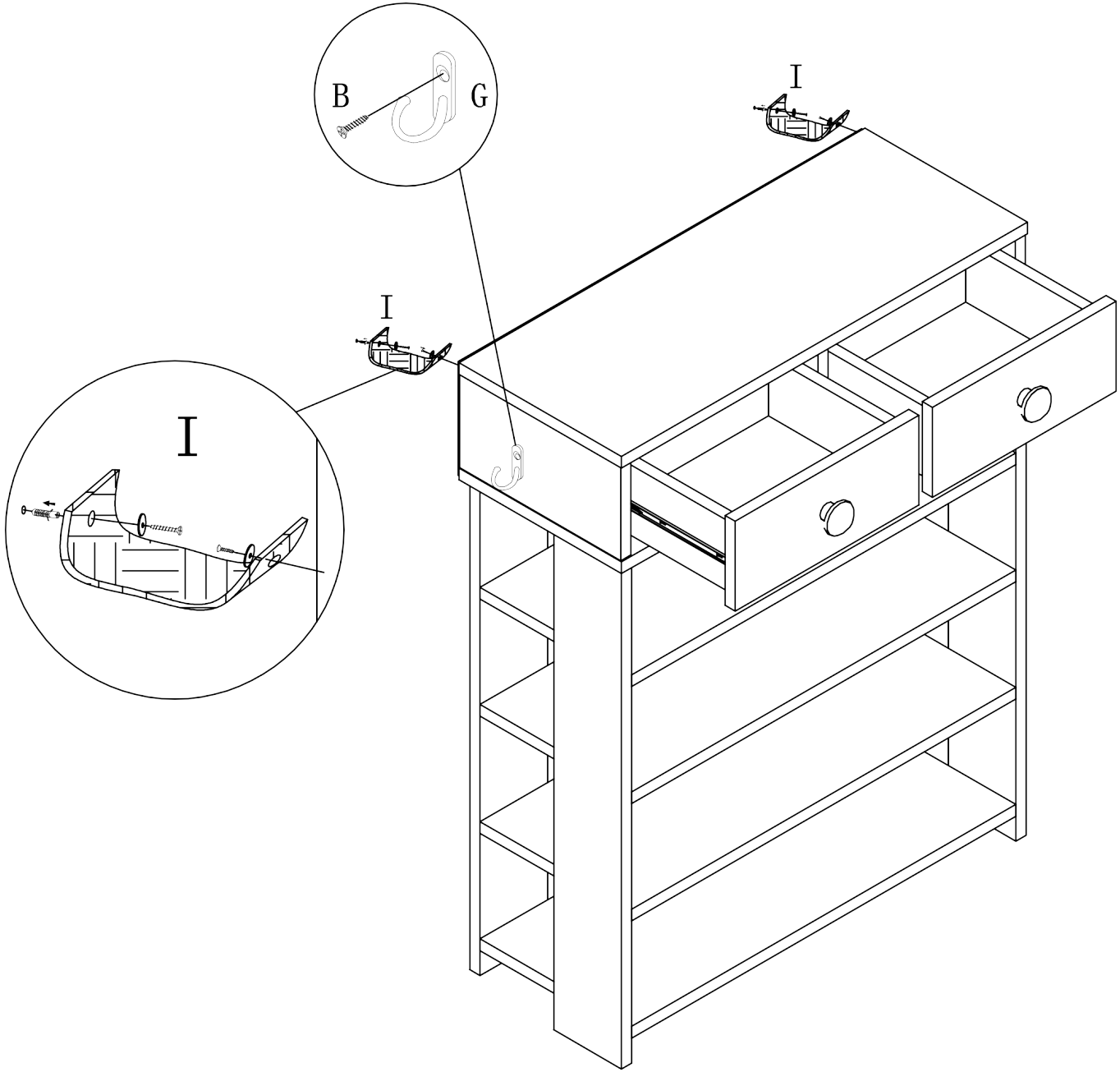
Ix2
Bx1
Gx1