ASSEMBLY INSTRUCTIONS

ART . NO. 23310023/01

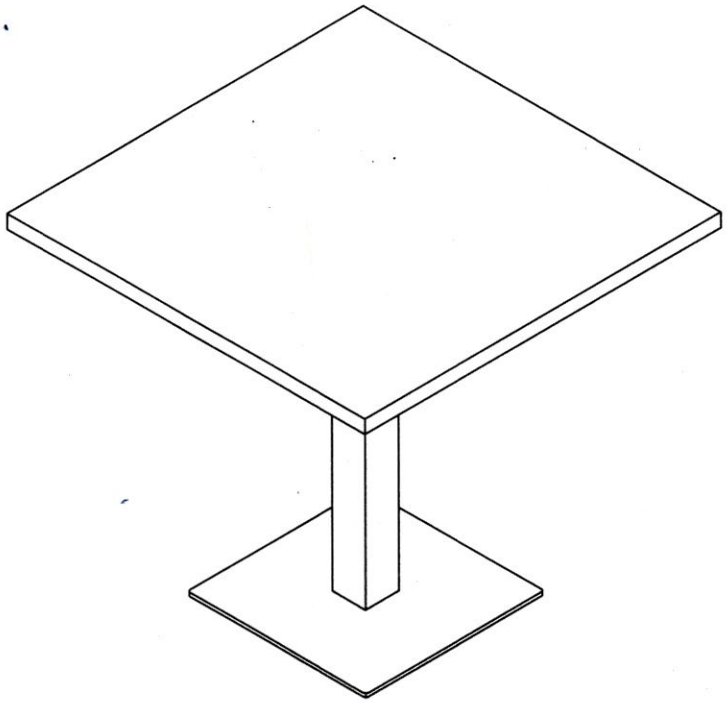

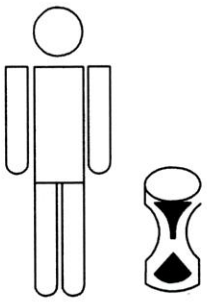

2 10

## HARDWARE LIST

| ITEM | GRAPHICS | | QTY |
|---|---|---|---|
| A | BOLTS M6x20 | | 04 |
| B | BOLTS M8x30 | | 06 |
| C | WASHER ( 1 x Ø6 x Ø16 ) | | 04 |
| D | ALLEN KEY | | 01 |

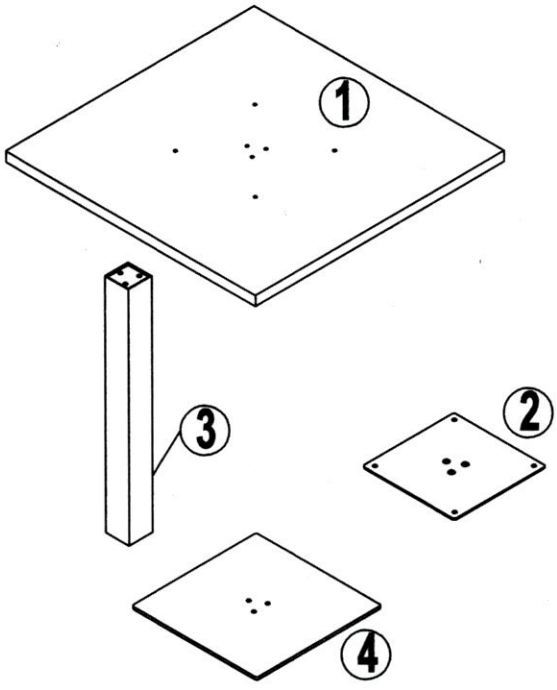


## LIST OF WOOD PARTS

| ITEM | DESCRIPTION | QTY |
|---|---|---|
| 1 | TOP TABLE | 01 |
| 2 | PLATE OF TOP | 01 |
| 3 | LEGS | 01 |
| 4 | PLATE OF BOTOM | 01 |

STEP 01

## ASSEMBLY INSTRUCTIONS

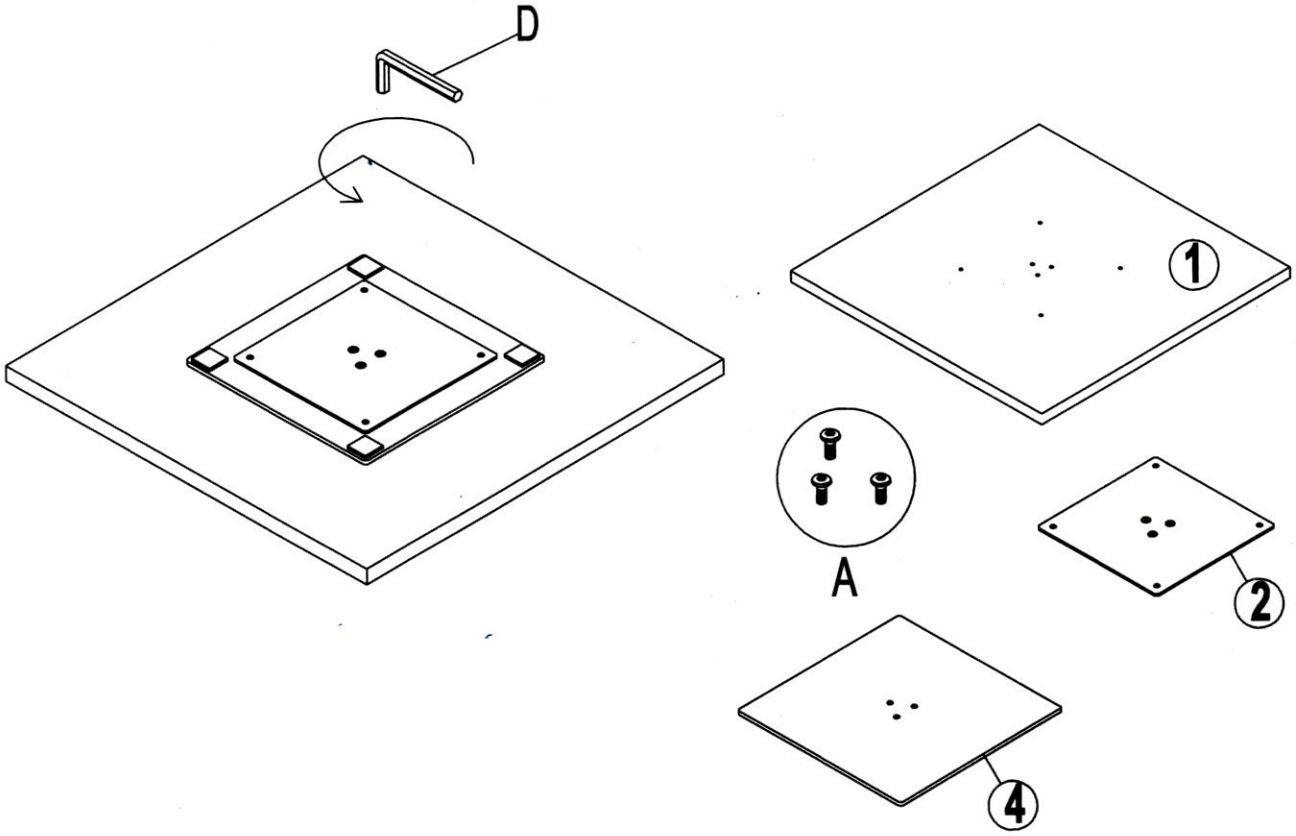


STEP 02

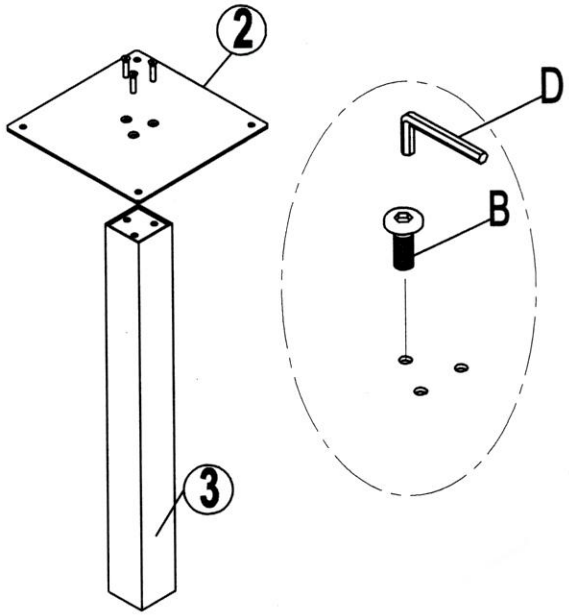


STEP 03

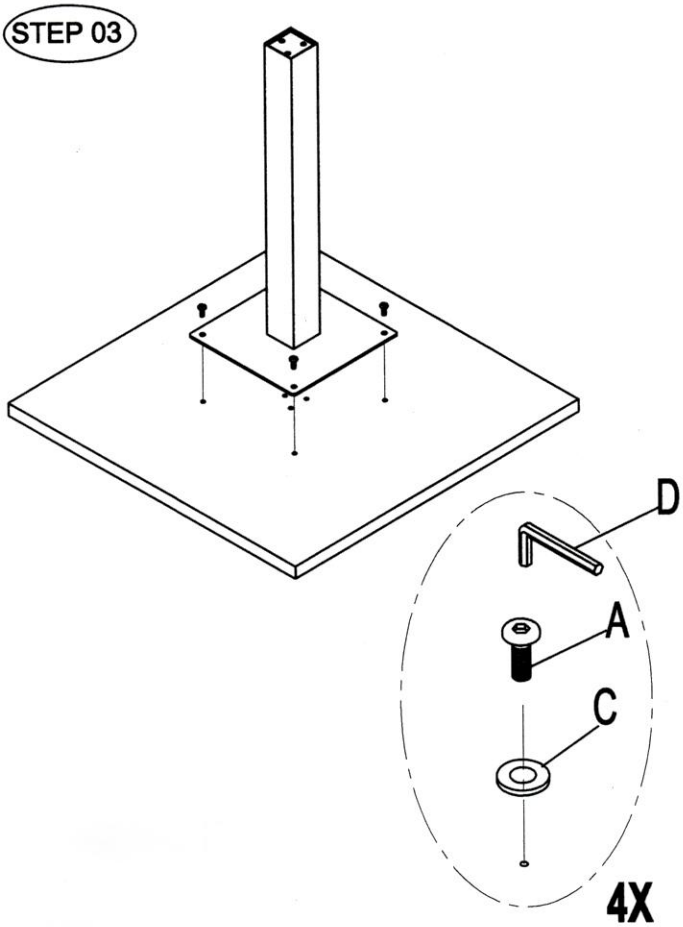

STEP 03

ASSEMBLY INSTRUCTIONS

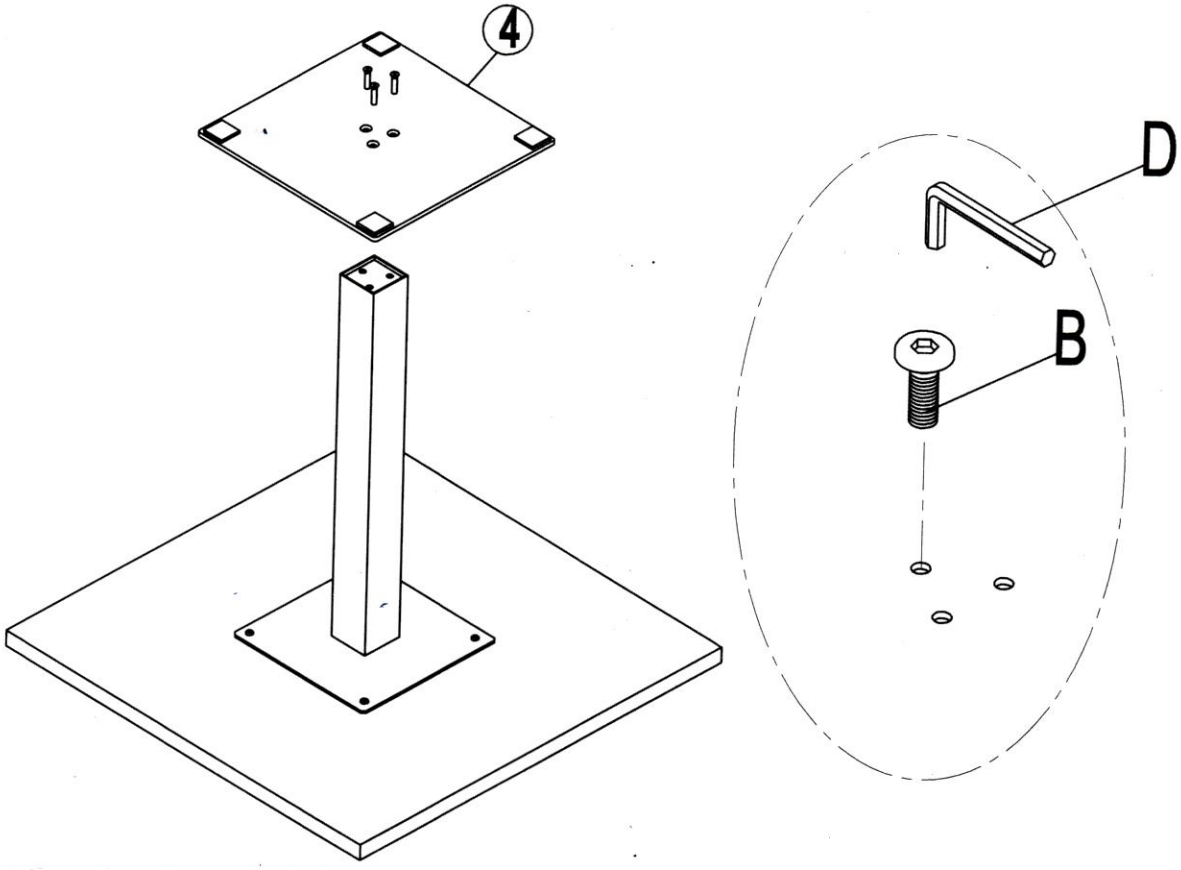


STEP 04

