Assembly Instructions
BRIGHTON TABLE 70X70 CM

Leg		Table Top		Washer - Ø8/Ø16 mm		Hex. Nut - M8/13mm		Wrench Key - 13mm		
A	4 pcs	B	1 pc	C	8 pcs	D	16 pcs	E	1 pc	

1

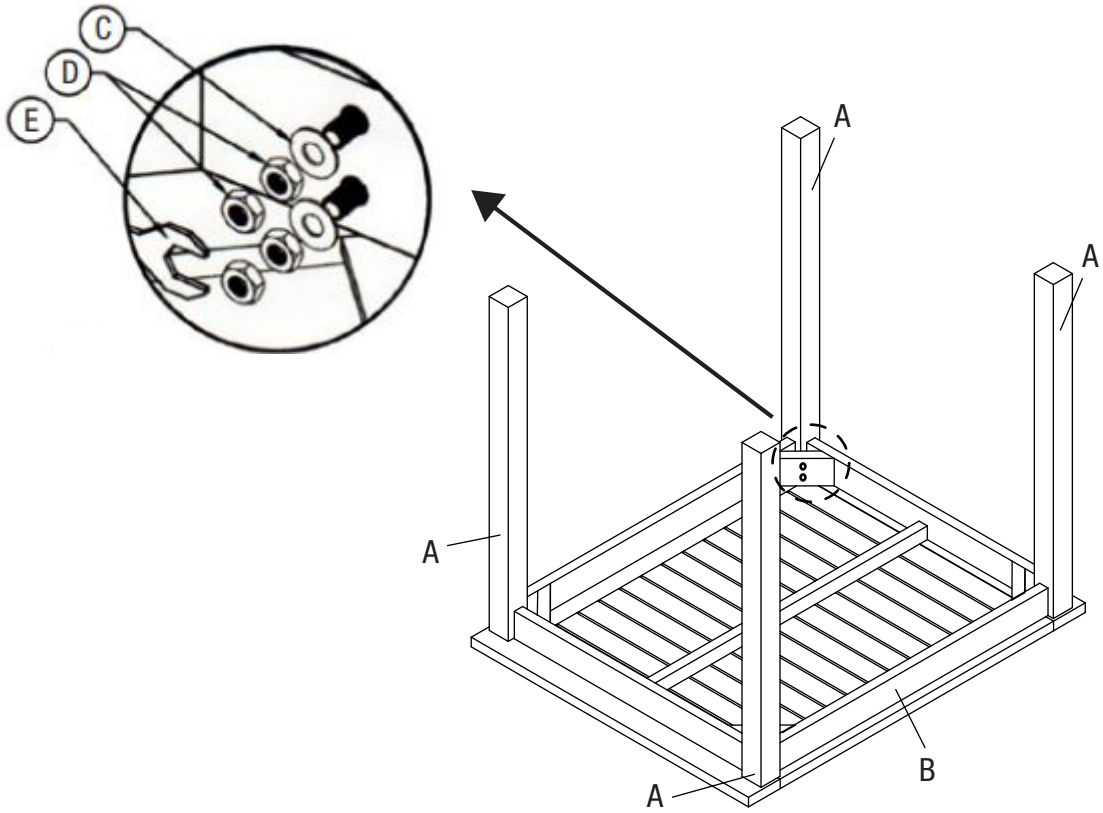

2

