60 min

10 / 13

Mattis BK by meise

140x200

A-86	B-86	C-86	D-86	E-86	F-86	G-86	H-86	I-86	J-86	K-86	LL/LR	M-86	N-86
H 195	M8		M6*30	M6*20	1.415*183*22	980*700 mm	984*50*20 mm	215*40*40		530*20*30		36 cm 850 N	M8*16
4	4	4	24	20	1	4	2	4	16	1	1 / 1	2	4

O-86	P-86	Q-86	R-86	S-86	T-86	U-86	V-86	W-86	X-86	Y-86
M8	M6*65	820*95*60	4*20	850*30*40	4	1.390*1.950 mm	530*30*40	M6	M6	
4	22	2	8	4	1	1	1	20	4	4

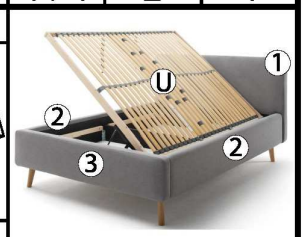

1

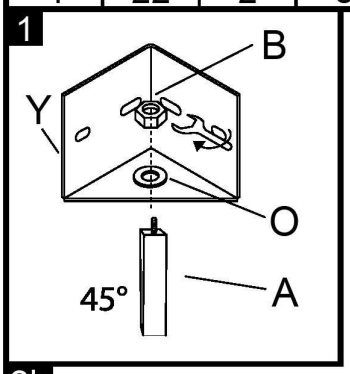

2b

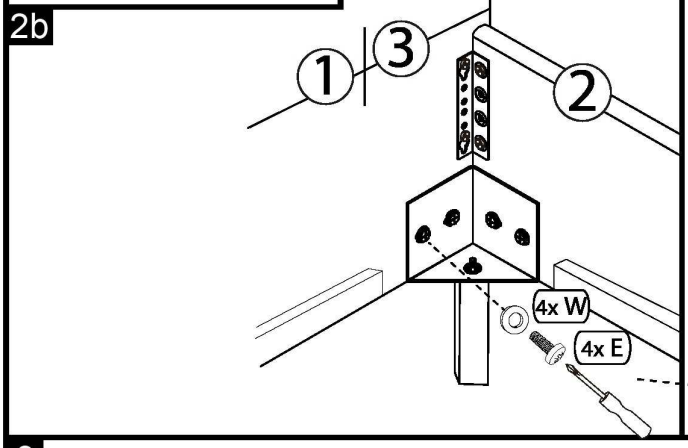

2a

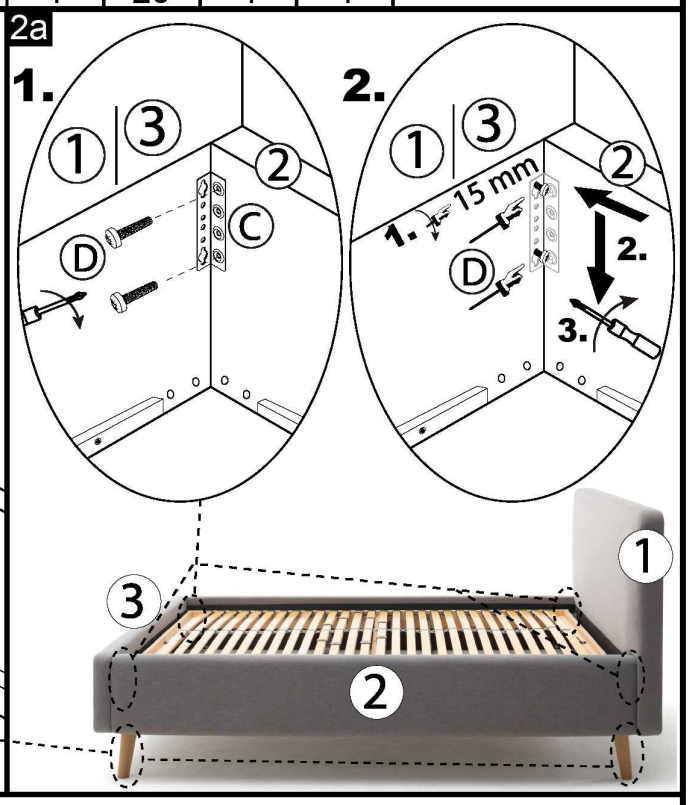

3

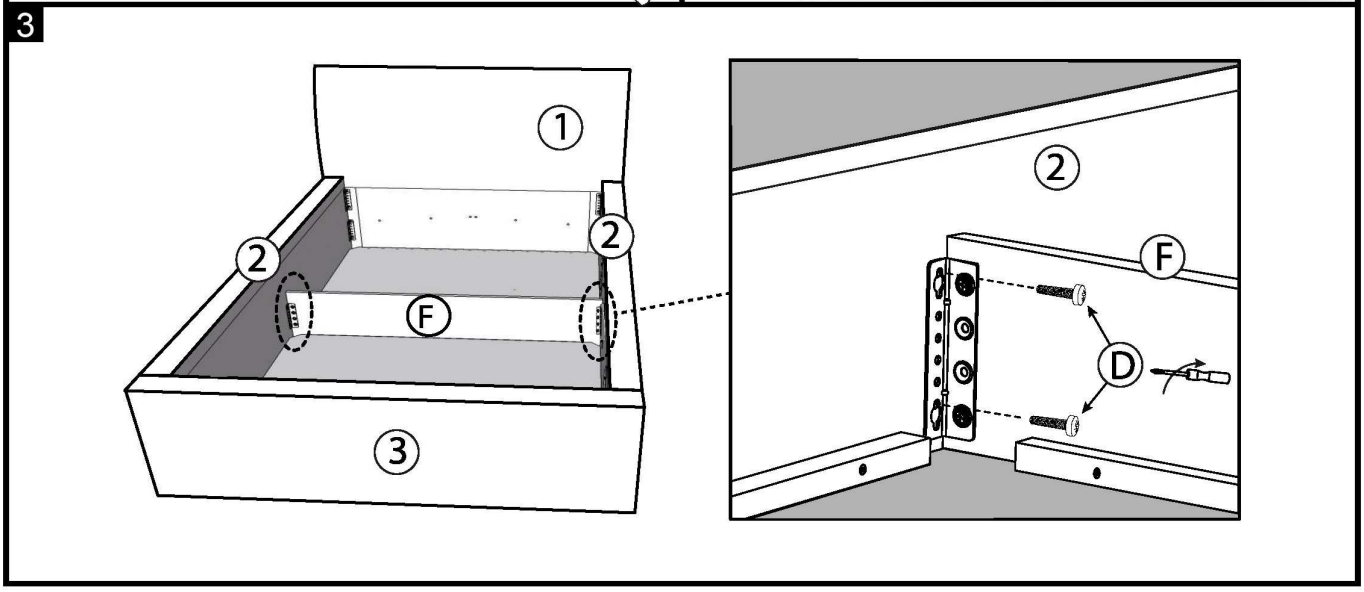

u

60 min | 10 / 13

MATTIS BK by meise

140x200

4

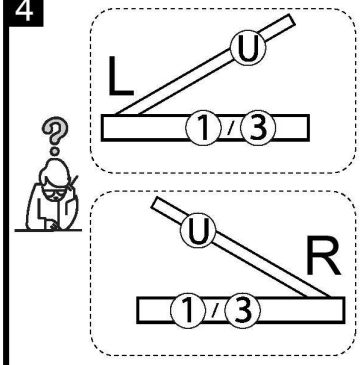

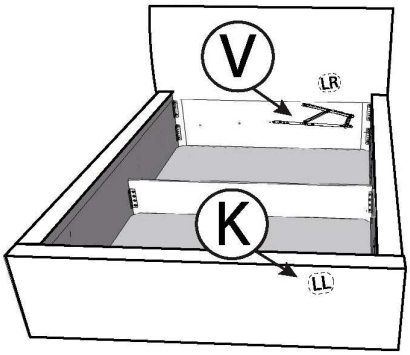

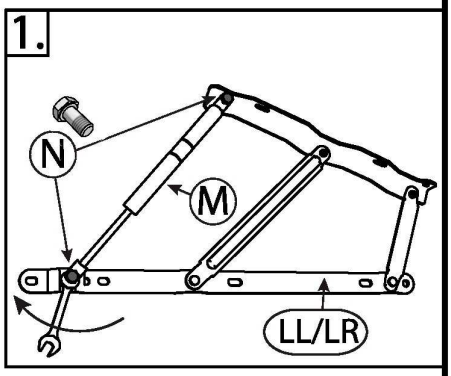

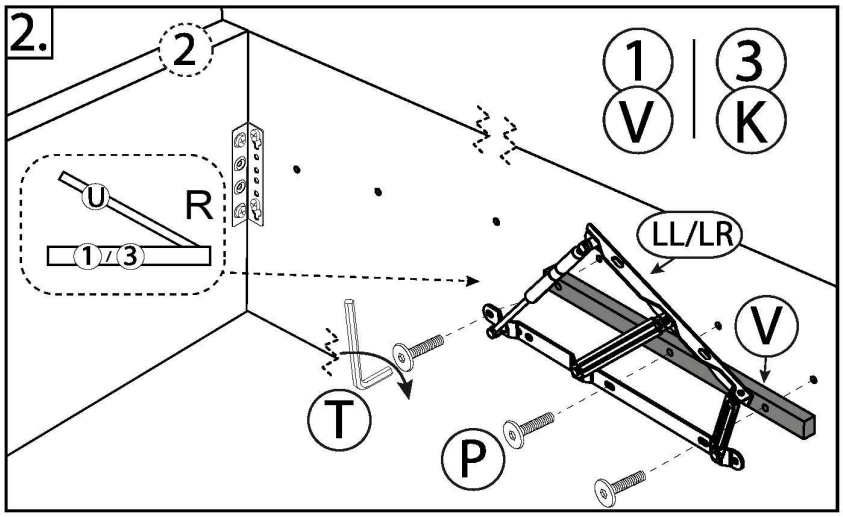

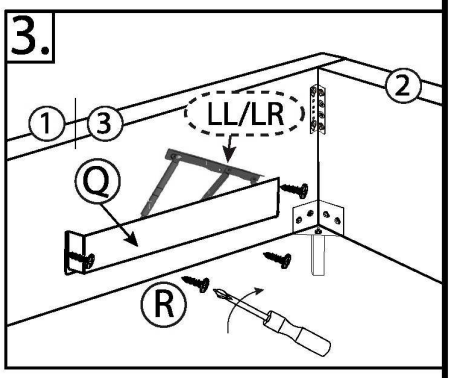

5

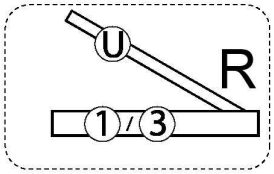

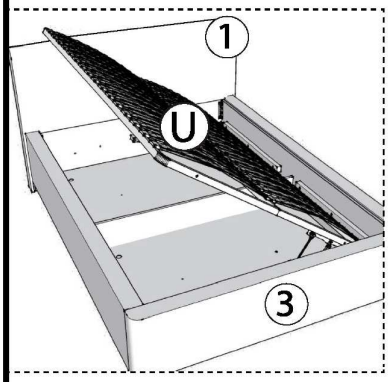

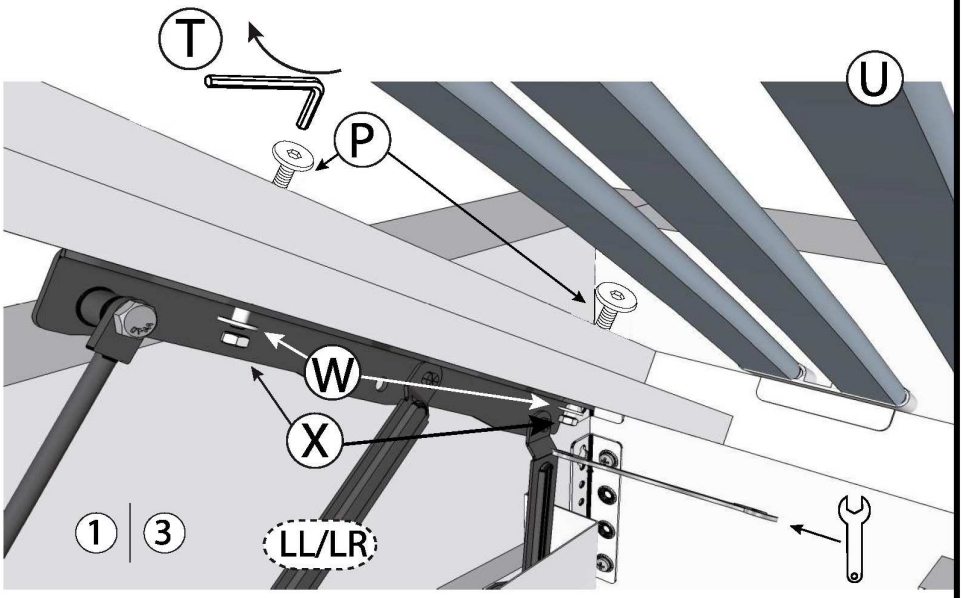

60 min | 10 / 13

MATTIS BK by meise

140x200

6

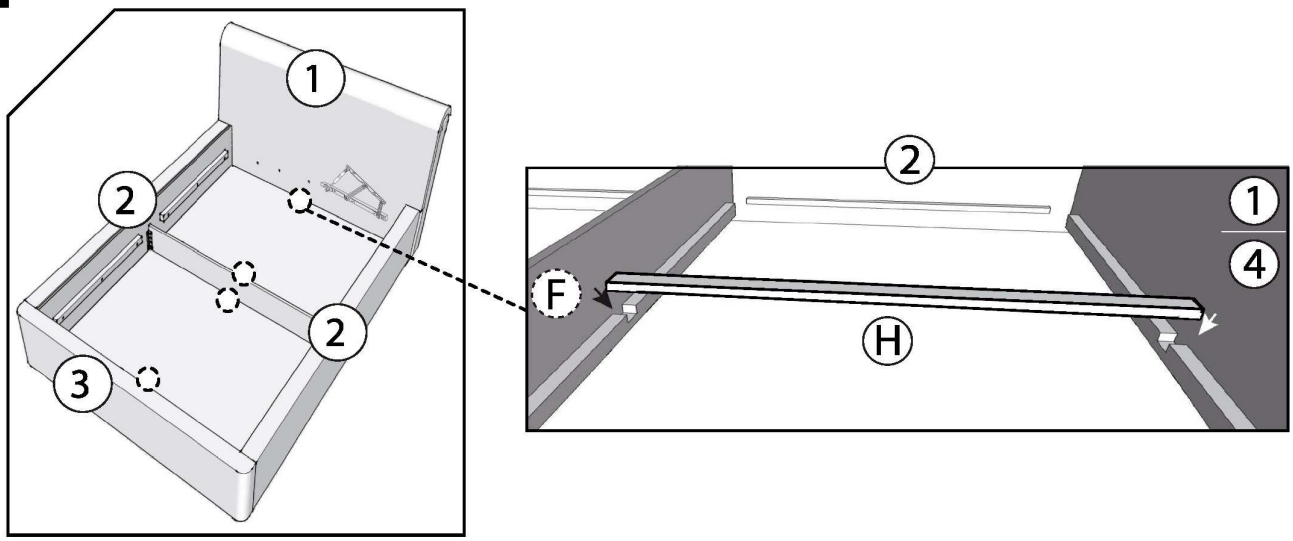

7

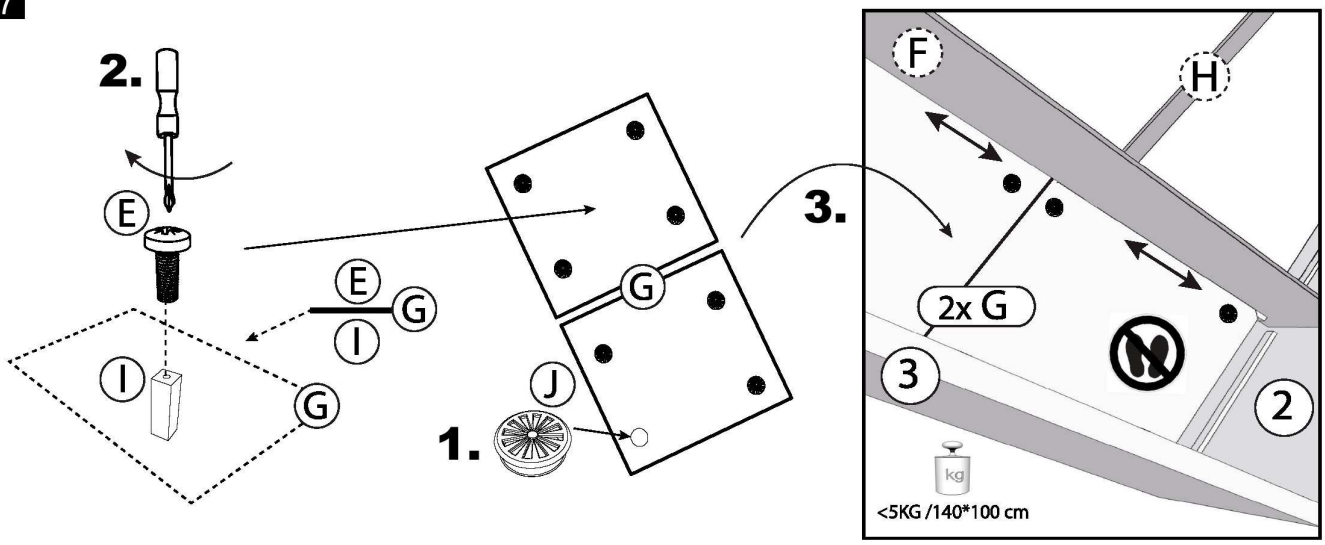

8

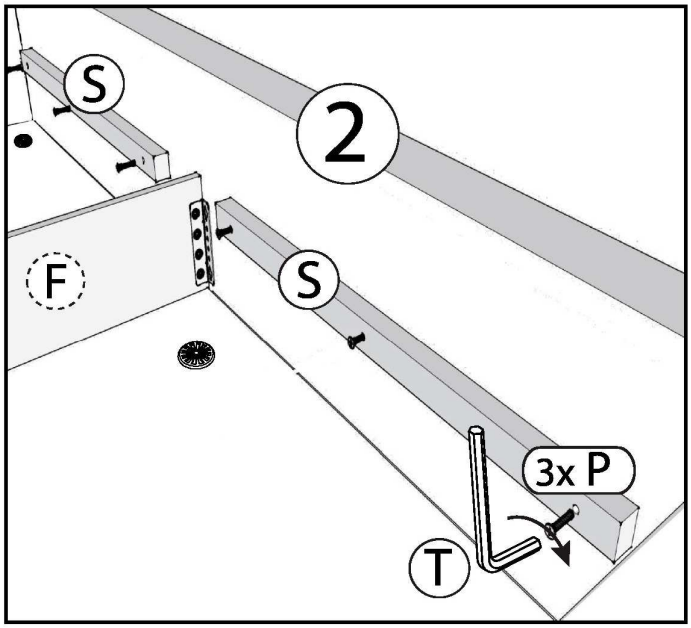

MATTIS by meise

13 | 30 min

A-86	B-86	C-86	D-86	E-86	F-86	G-86	H-86	I-86	J-86	K-86	L-86	M-86	N-86
		ca.195	M6*30	1975* 70*30	M6*20	M6	ca. 200-320	4*20	3,5*20			M8	M8
8	4	4	18	1	16	18	2	4	8	1	4	4	4

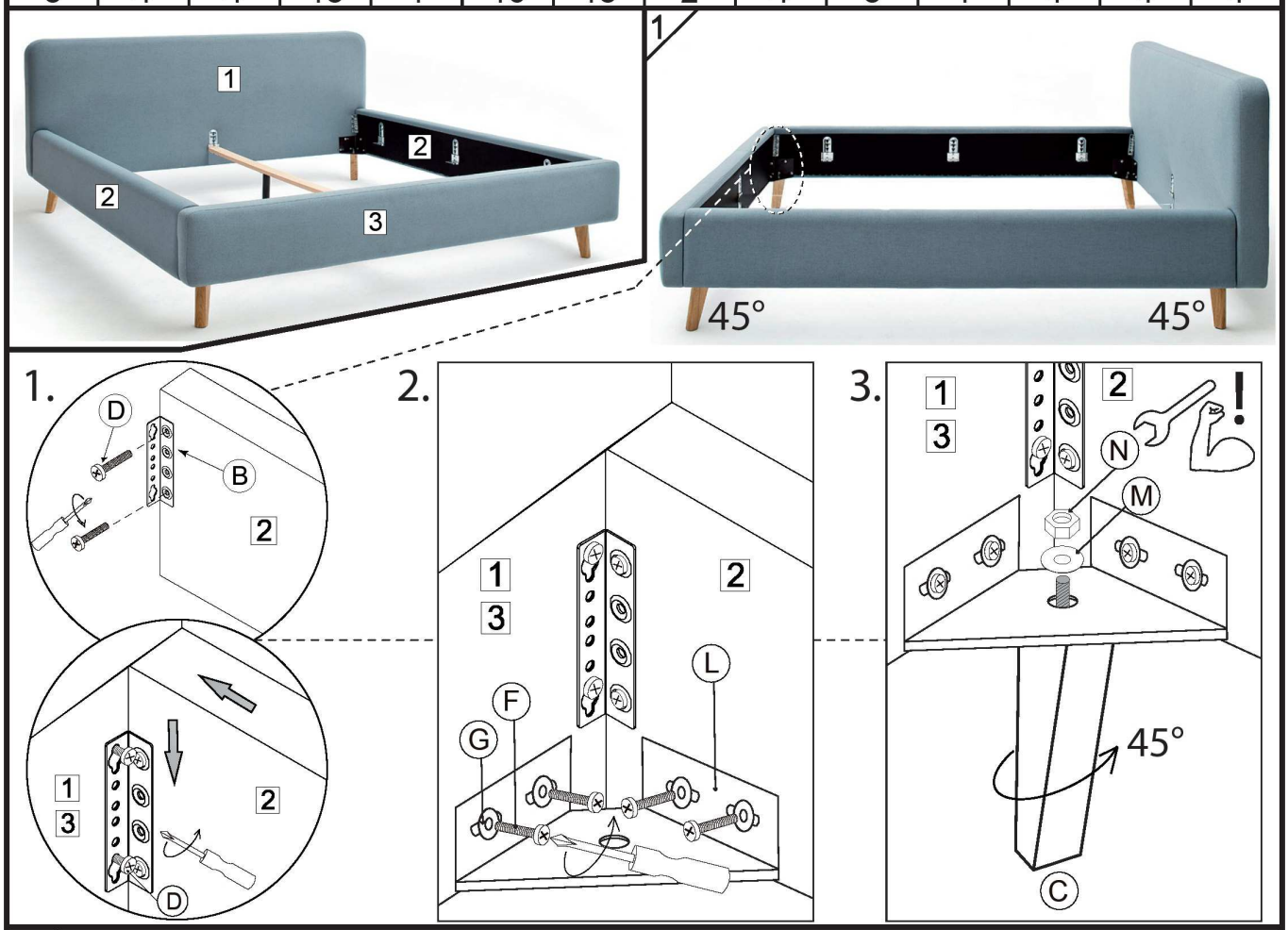

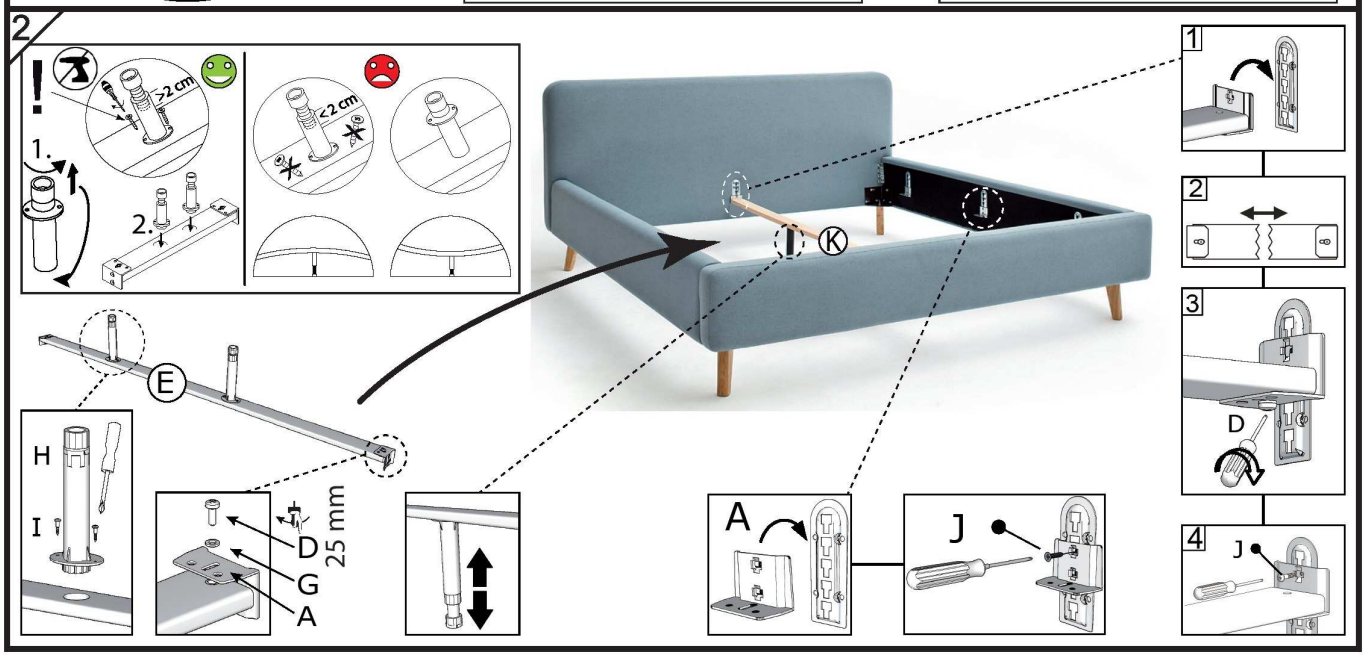

60 min

10 / 13

Mattis BK by meise

160x200
180x200

A-86	B-86	C-86	D-86	E-86	F-86	G-86	H-86	I-86	J-86	K-86	LL/LR	M-86	N-86
H 195	M8		M6*30	M6*20	2005*183*94	160/180: 78/88*99 cm	160/180: 780/880* 50*20	215*40*40		530*30*20		36 cm 350 N	M8*16
4	4	4	32	20	1	4	2	4	16	2	2 / 2	4	8

O-86	P-86	Q-86	R-86	S-86	T-86	UL/UR	V-86	W-86	X-86	Y-86
M8	M6*65	160 cm: 0 820*95*60	4*20	1.800*40*30	4	160/180/ 200: 79/89/99*195cm	530*30*40	M6	M6	
4	20	4	16	2	1	1 / 1	2	24	8	4

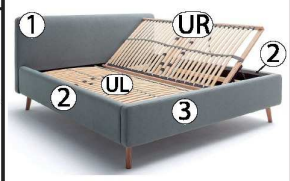

1

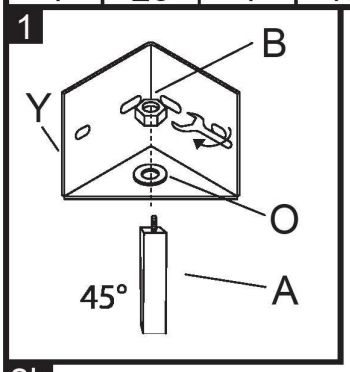

2b

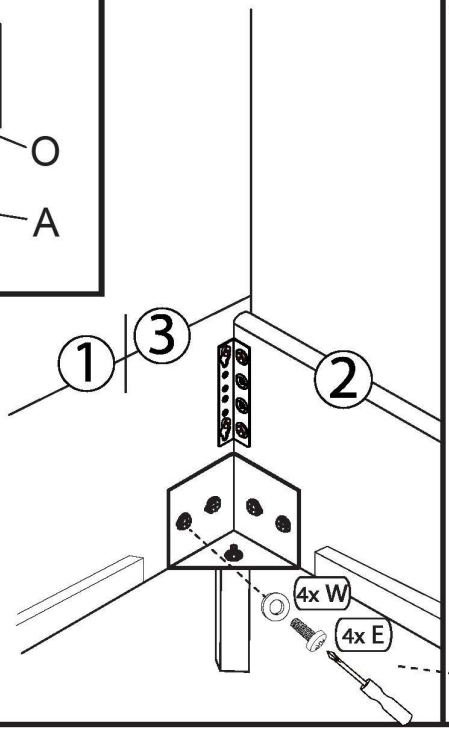

2a

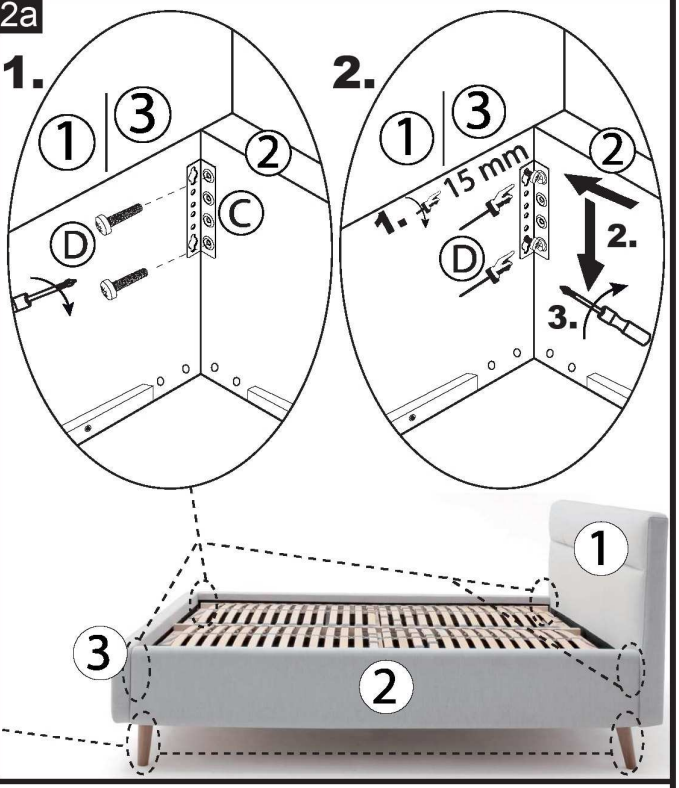

3

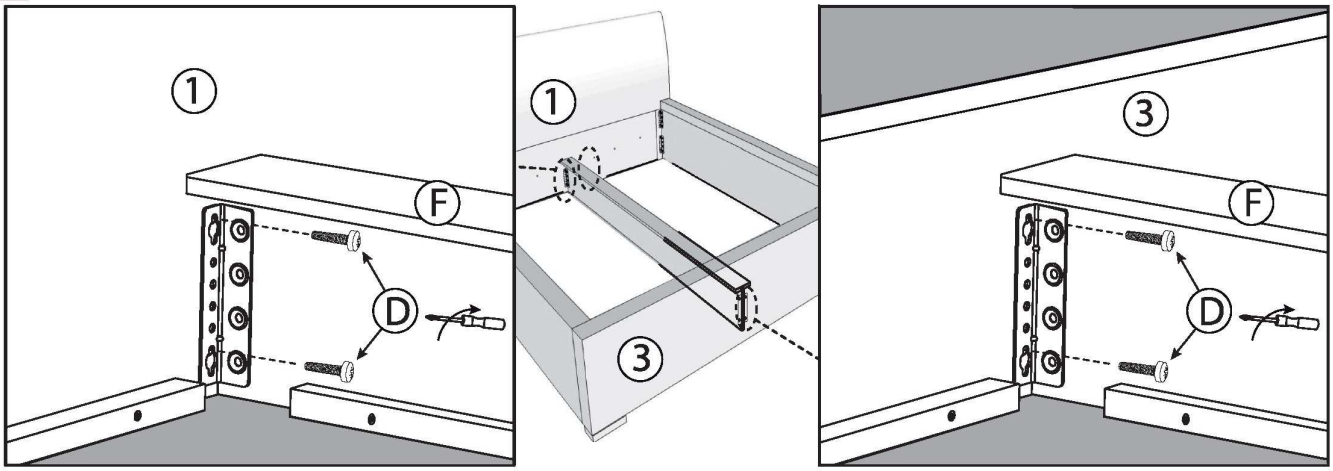

60 min

10 / 13

MATTIS BK by meise

4

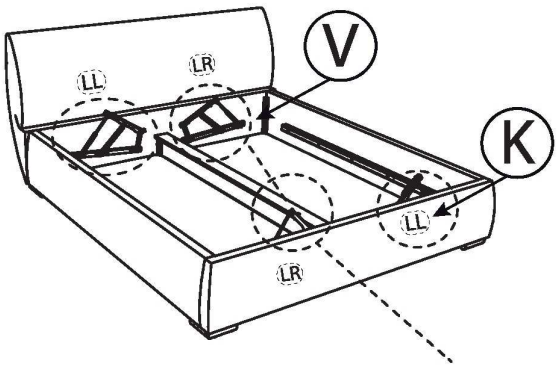

1.

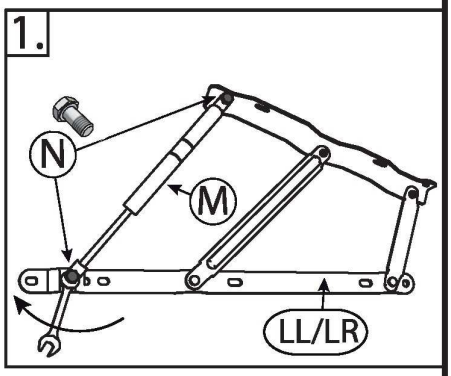

2.

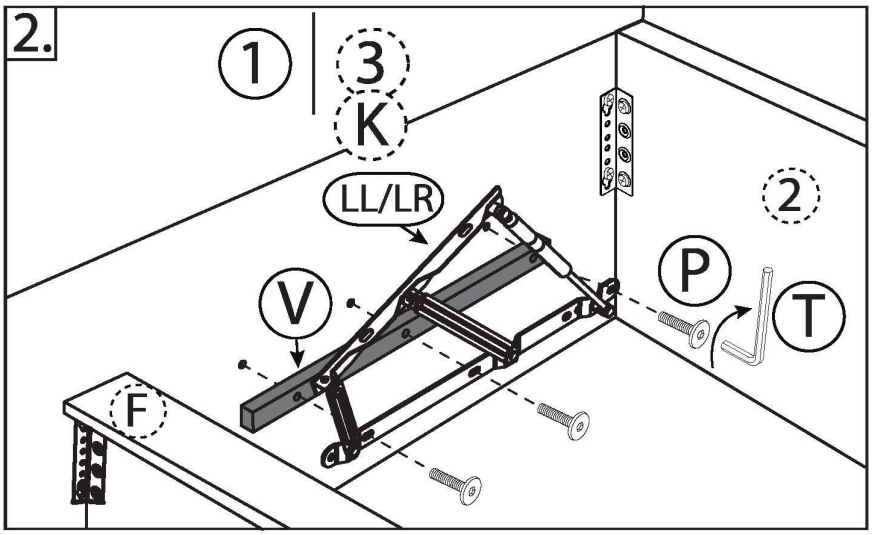

3. ~~160 x 200 cm~~
180 x 200 cm

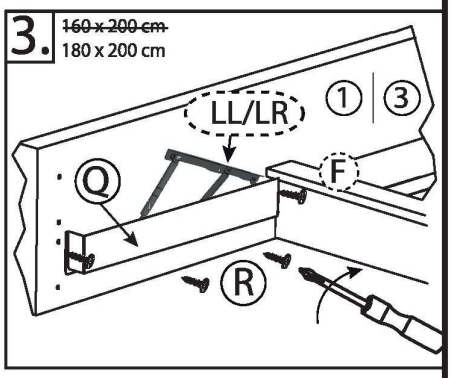

5

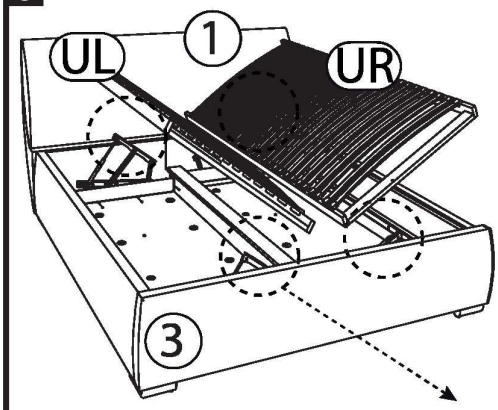

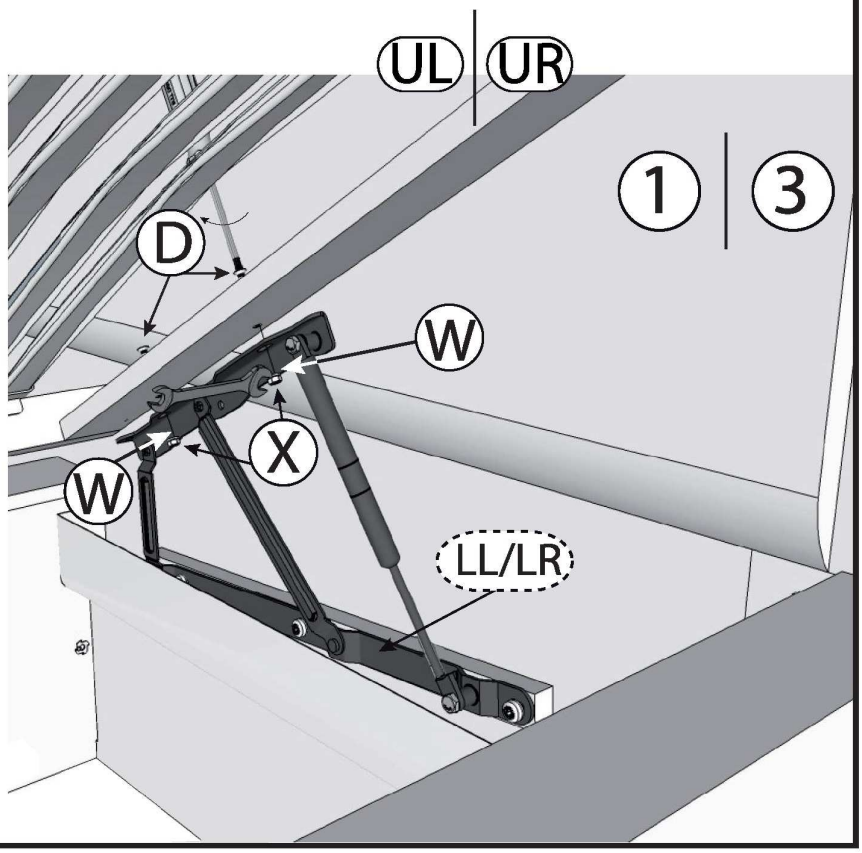

MATTIS BK by meise

6

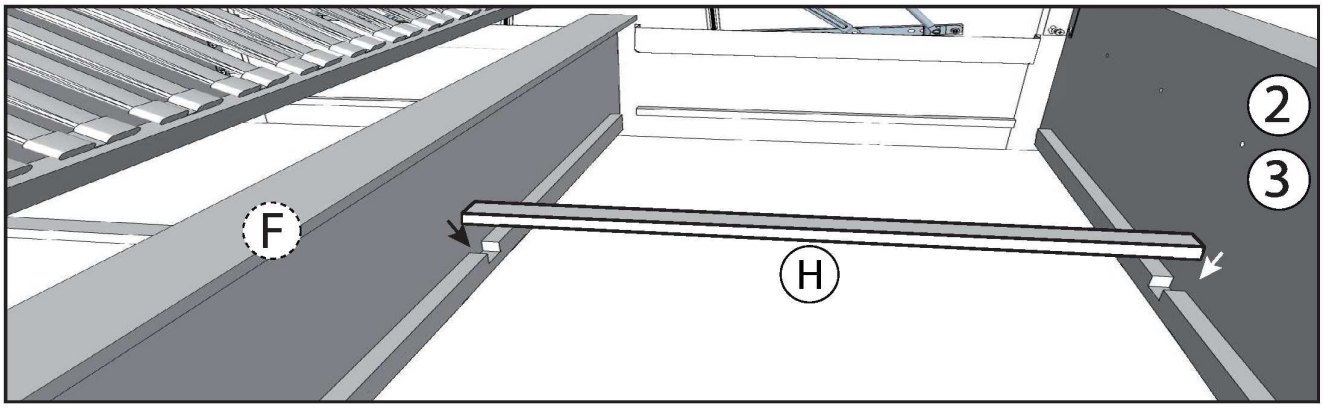

7

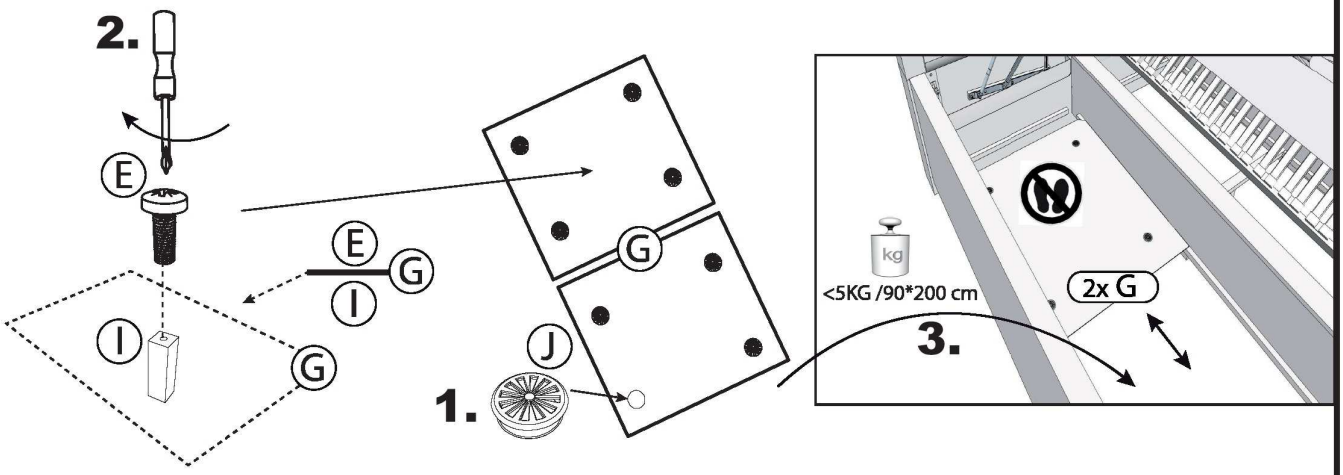
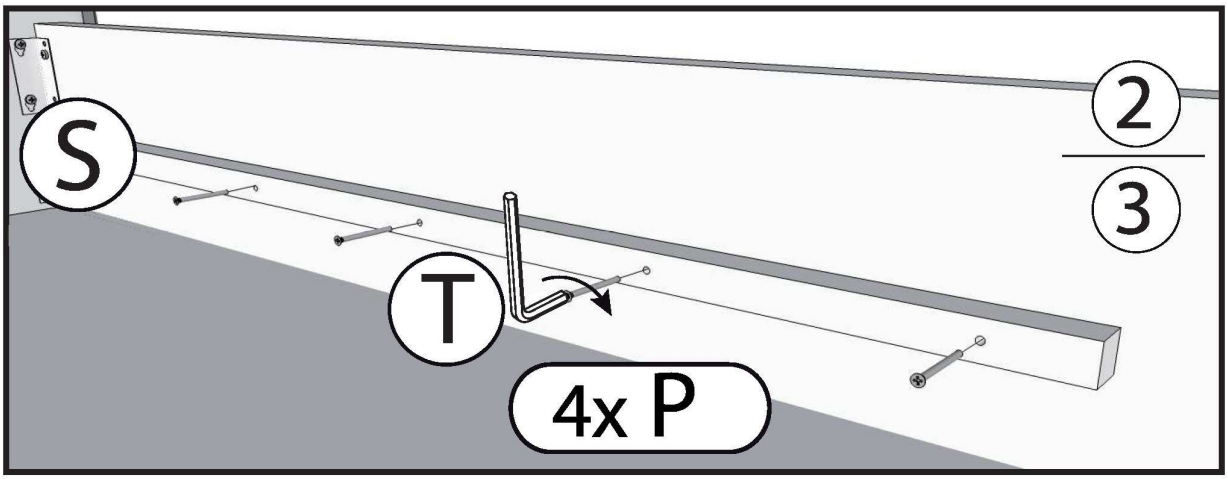
8