24270305/22
24270305/35
24270305/09

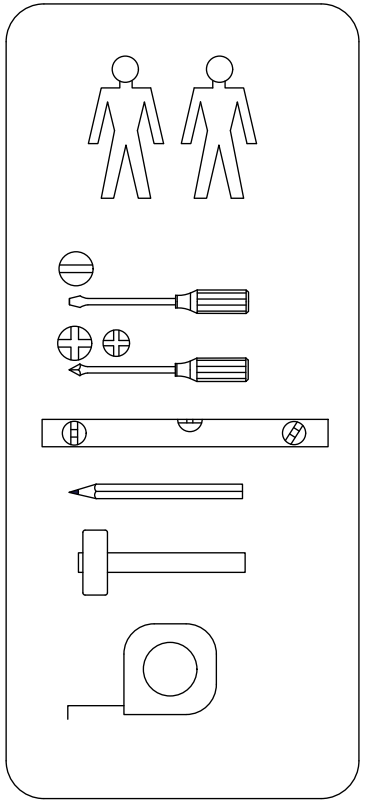

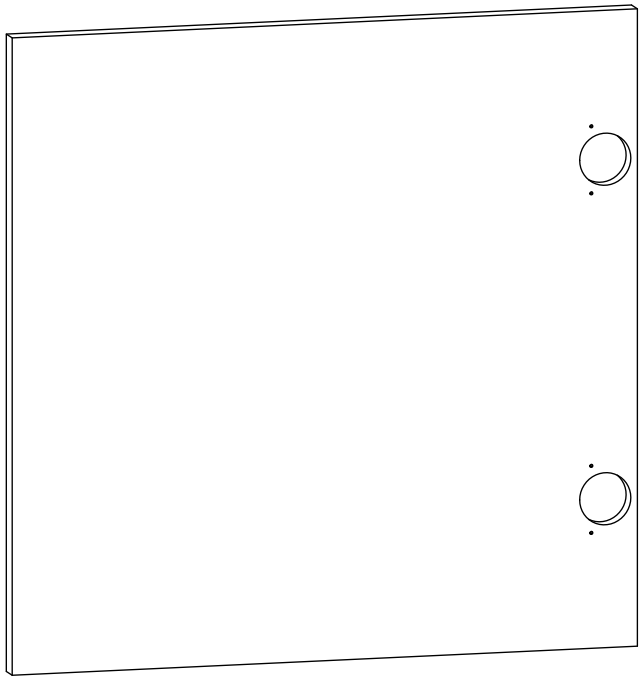

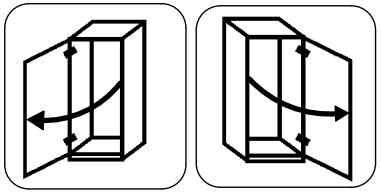

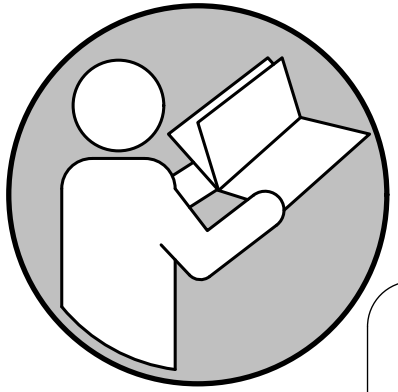

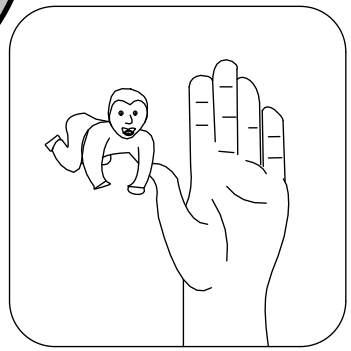

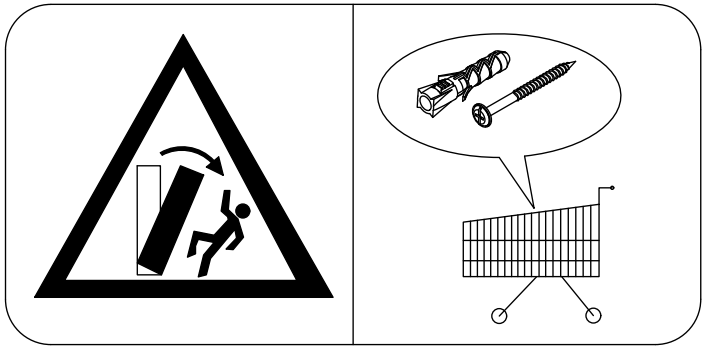

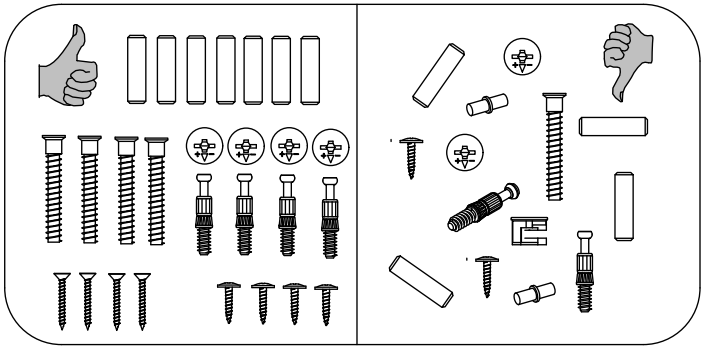

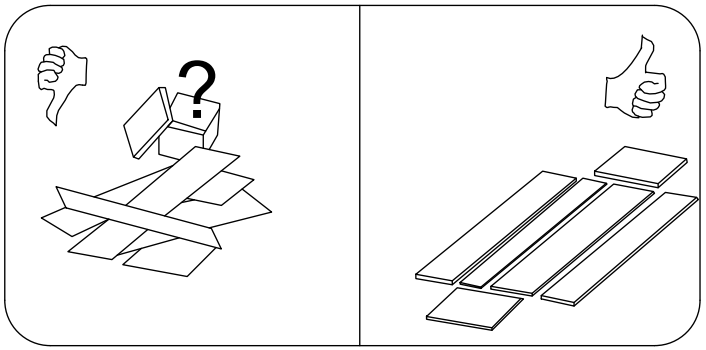

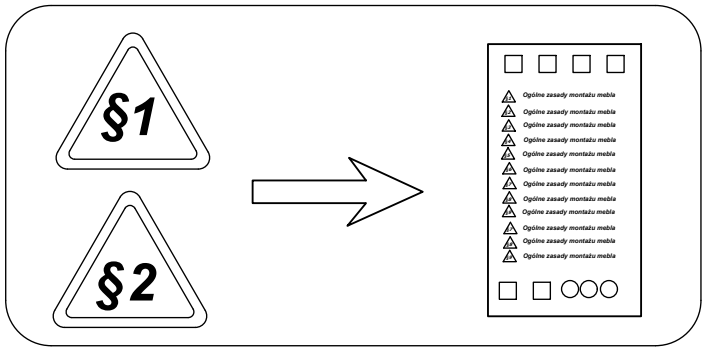
§1
§2
Ogólne zasady montażu mebla

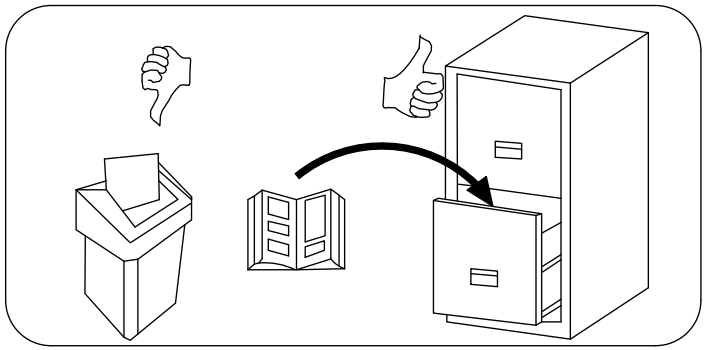

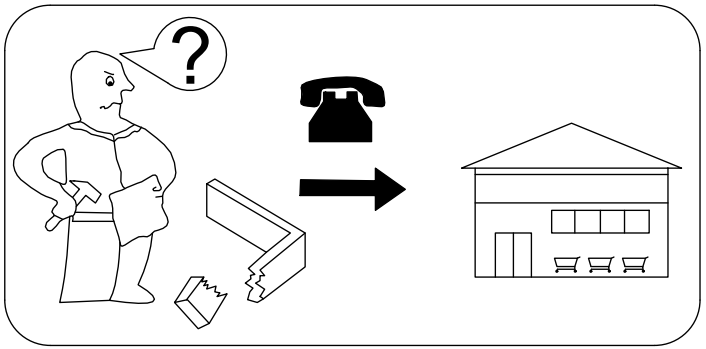

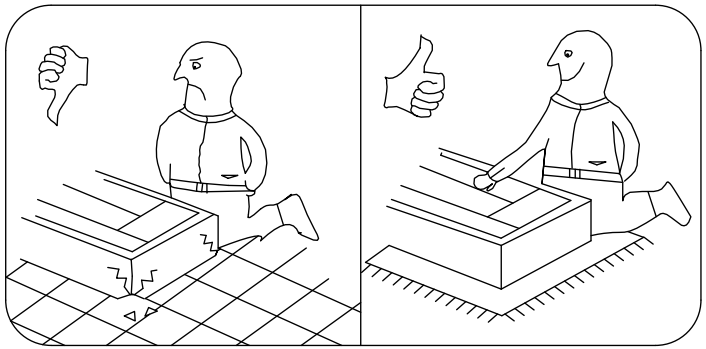

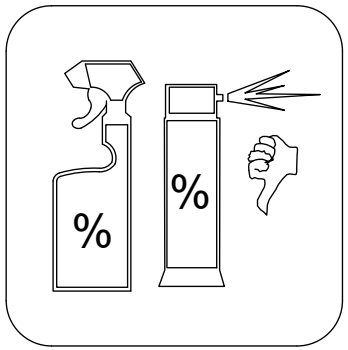
%
%

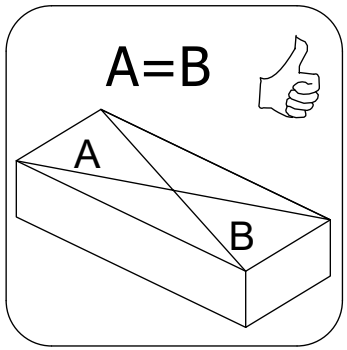
A=B
A
B

B1	B2	C1	C2	C3	C4	D
S655-0001	-.2	428	428	15	1	1/1

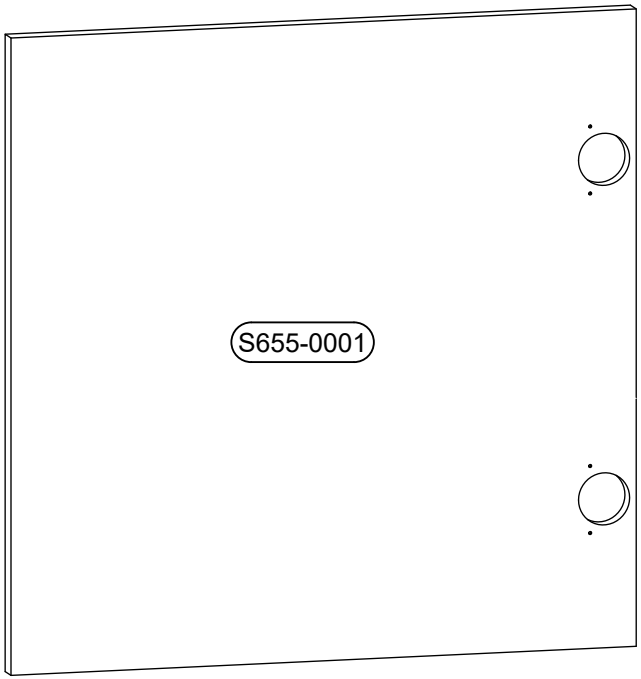

1:1

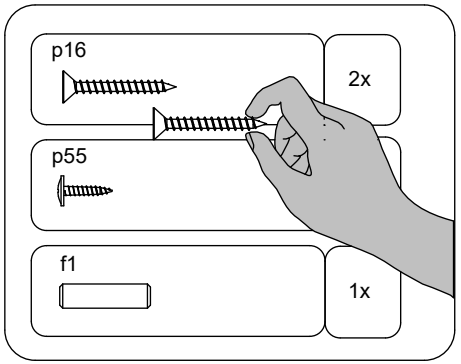

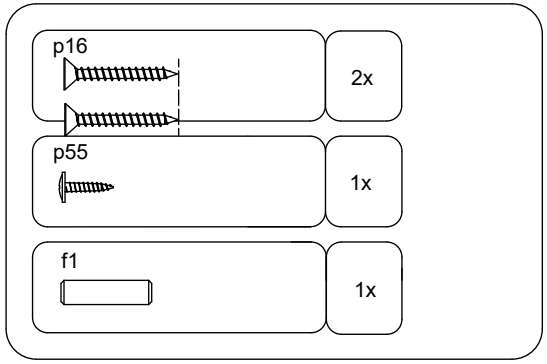

e69 Ø4.2x13.5 mm	4x
p51 Ø3.5x15 mm	4x
z28\4 Ø3x12 mm	2x

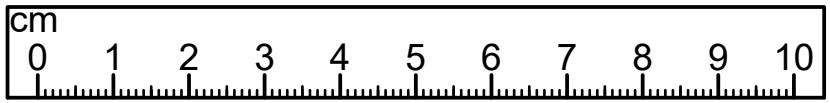

~~1:1~~

a211

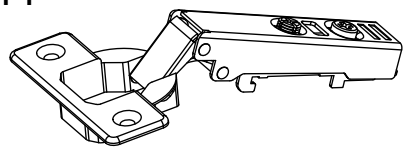

2x

b90\2

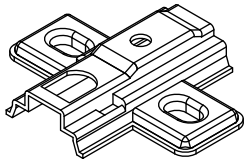

2x

z28\5

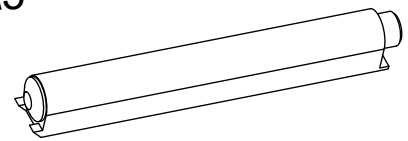

1x

z28\2

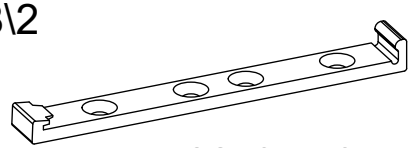

82x9.5x6.5 mm

1x

1

a111	2x	p51 Ø3.5x15 mm	4x

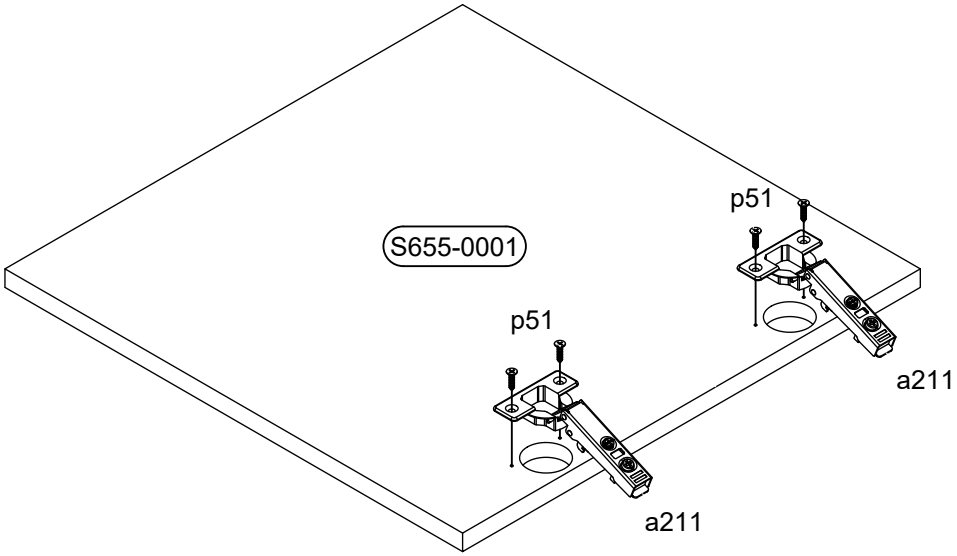

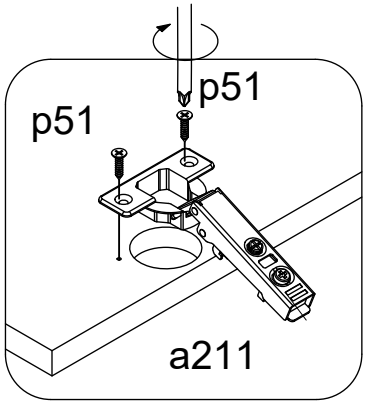

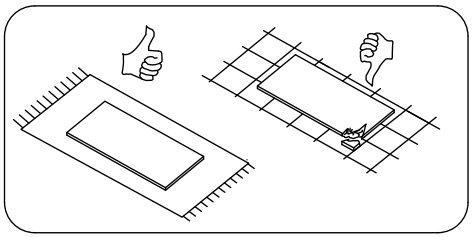

2A

b90\2	2x	e69 Ø4.2x13.5 mm	4x	z28\2 82x9.5x6.5 mm	1x	z28\4 Ø3x12 mm	2x

§6 §14

§19

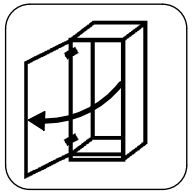

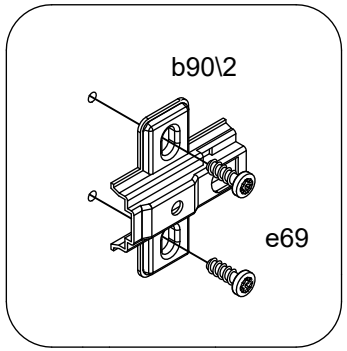

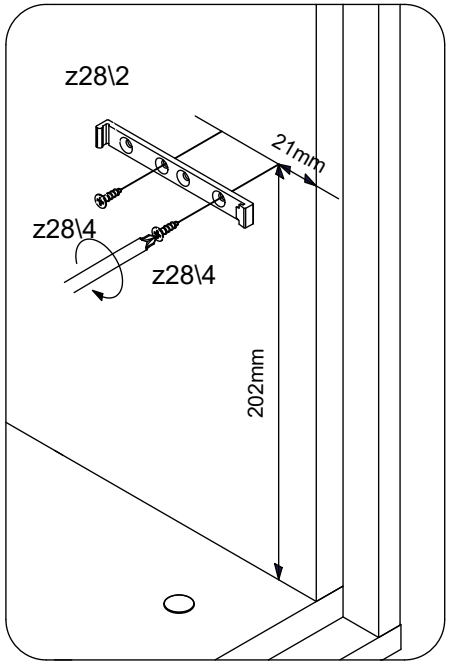

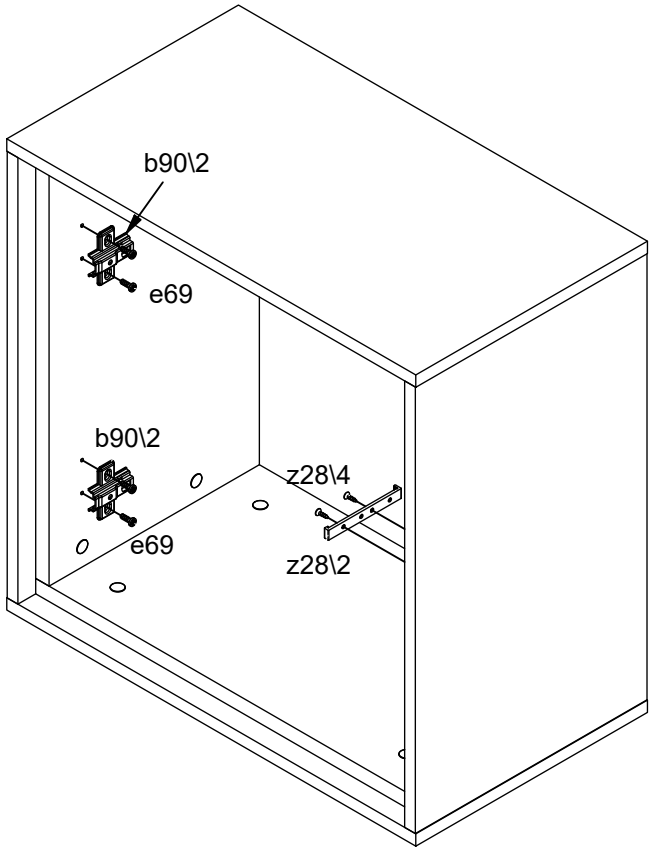

3A

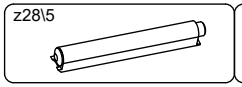

1x

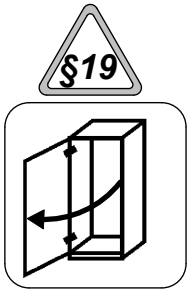

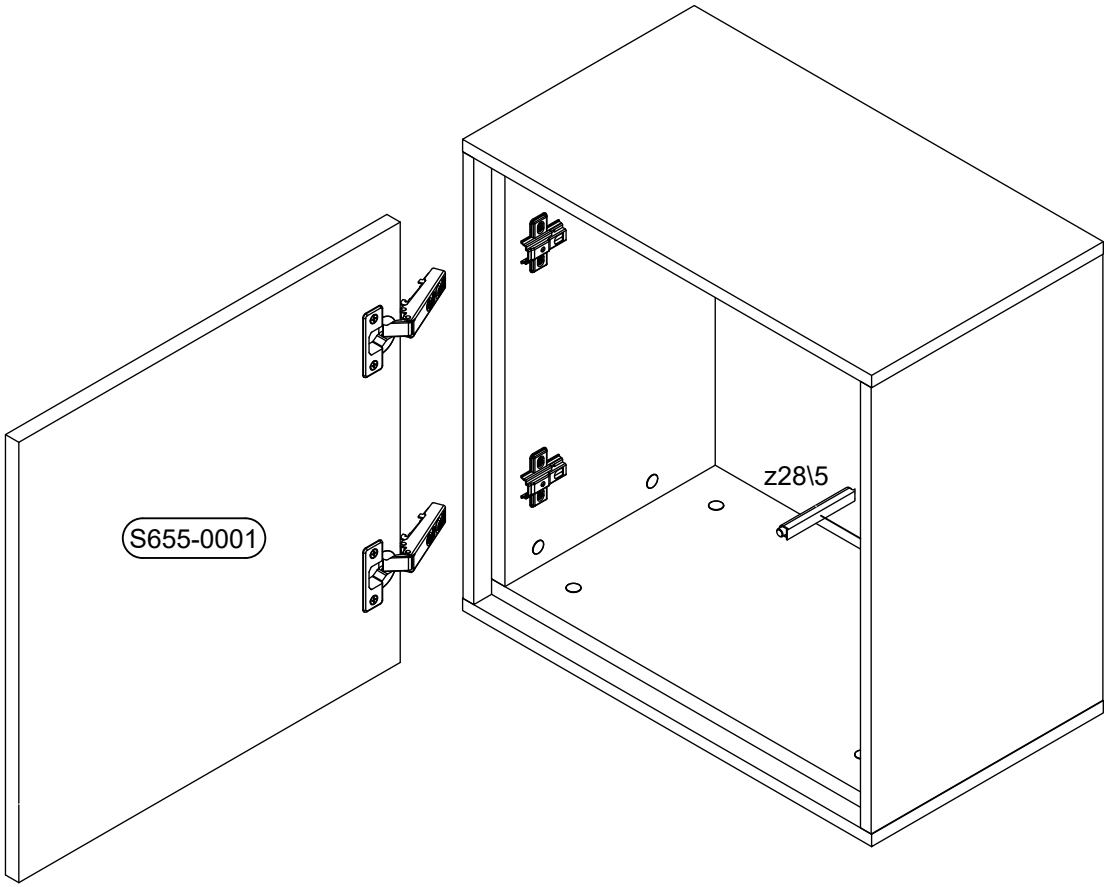

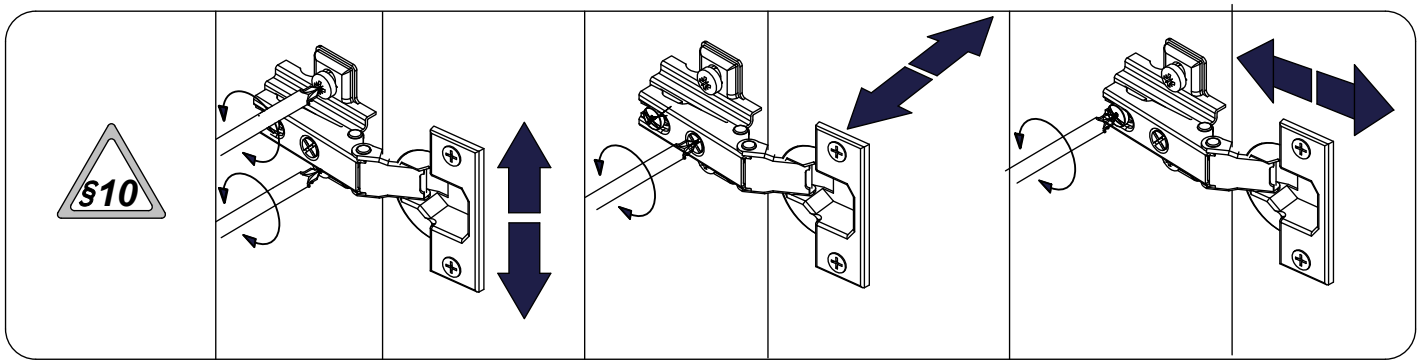

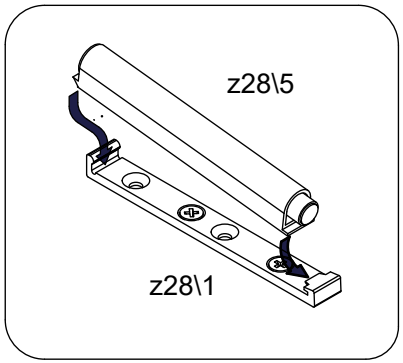

2B

b90\2	e69	z28\2	z28\4
2x	4x	1x	2x
	Ø4.2x13.5 mm	82x9.5x6.5 mm	Ø3x12 mm

§6 §14

§19

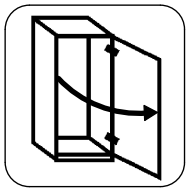

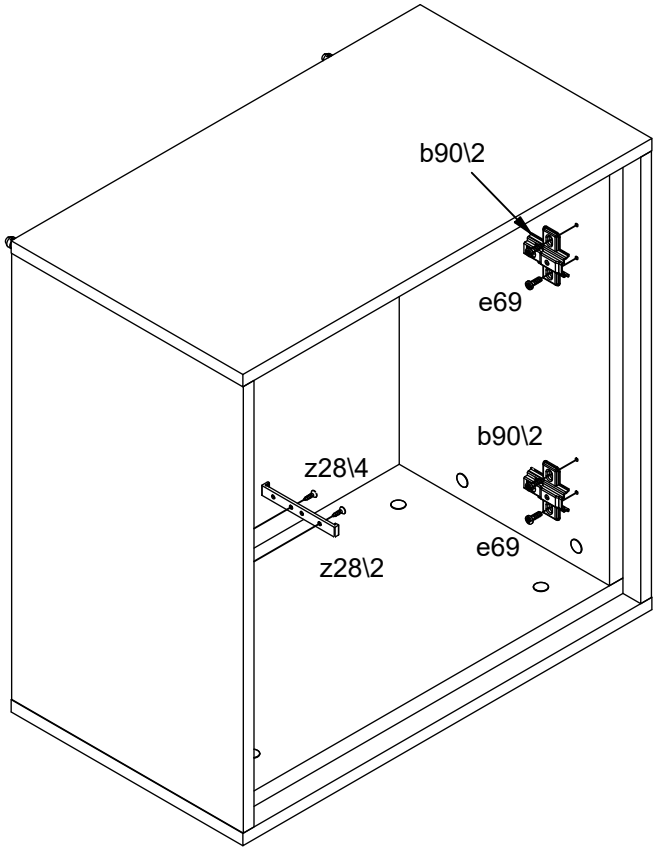

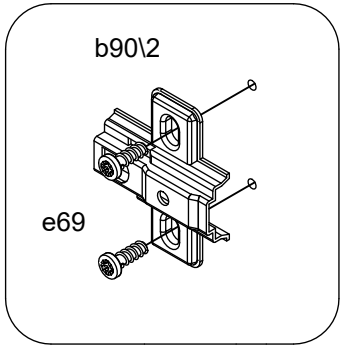

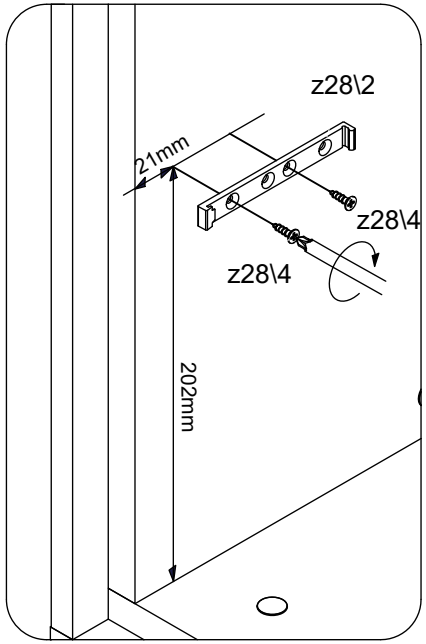

3B

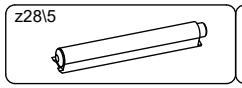
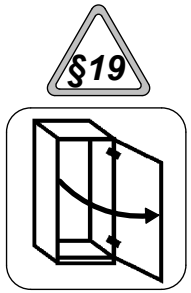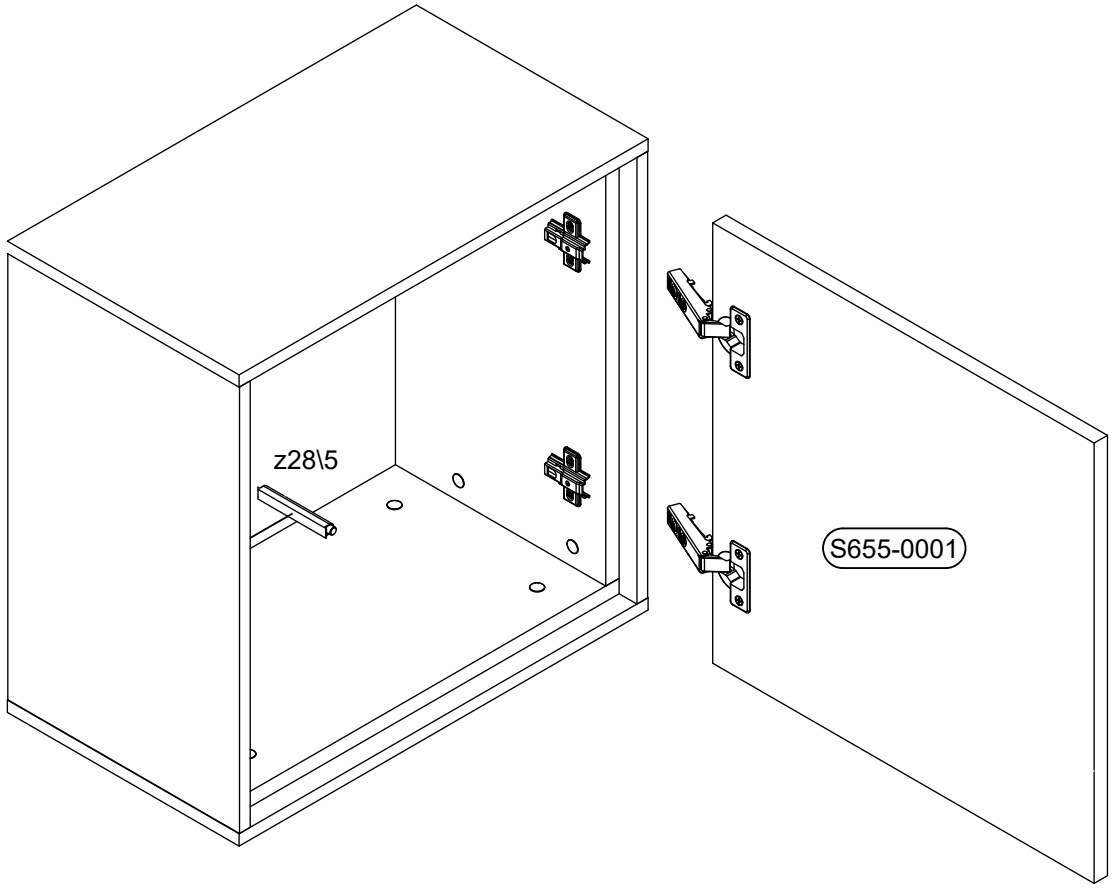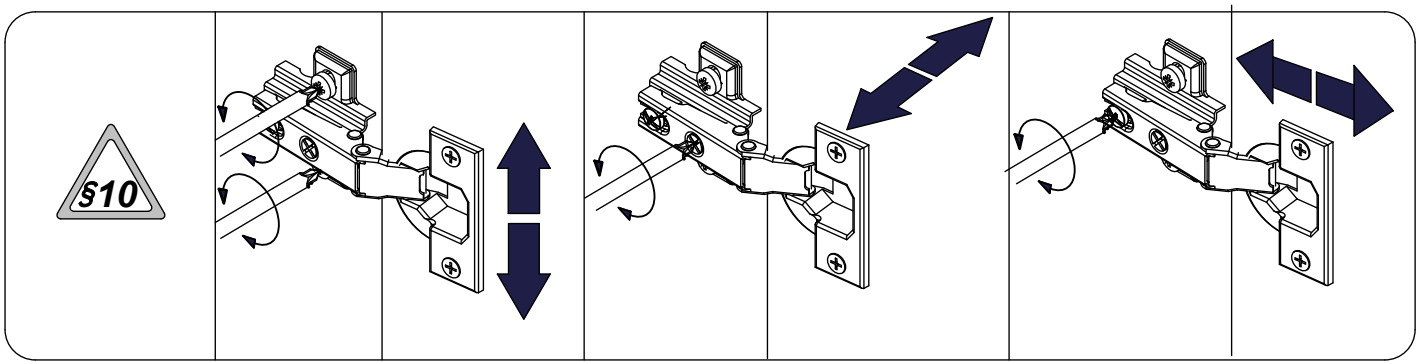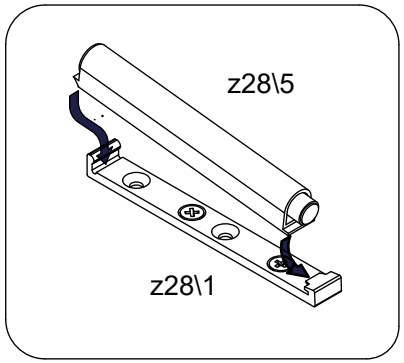
1x