ASSEMBLY INSTRUCTIONS

ITEM NO.: 25359/25559

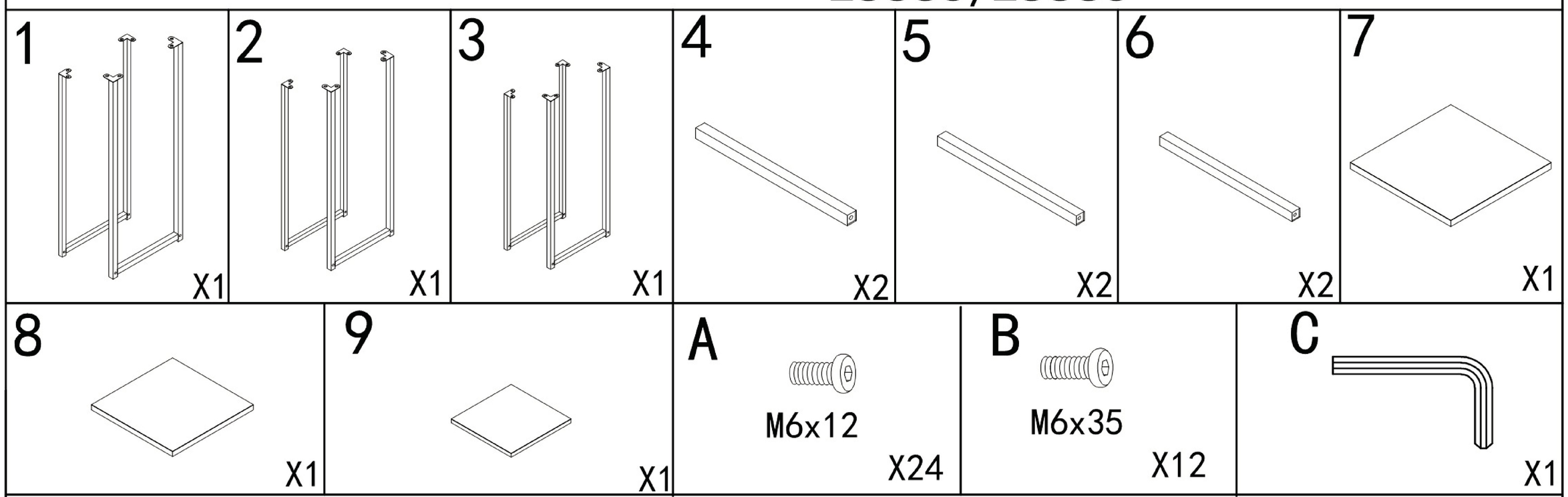

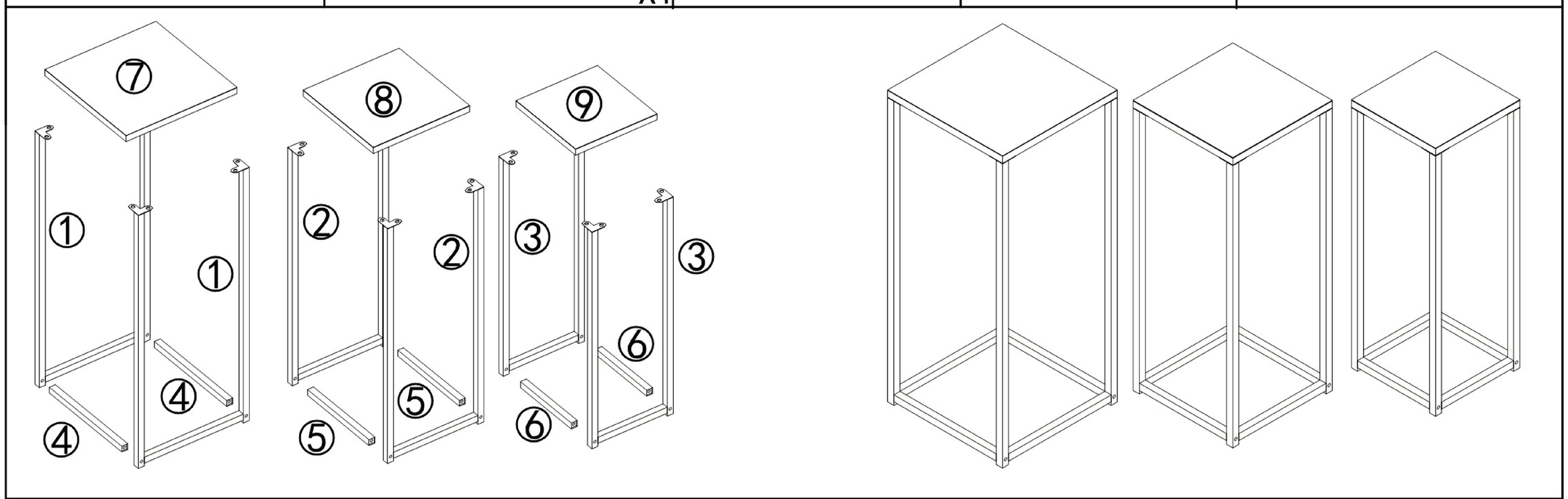

STEP 1:

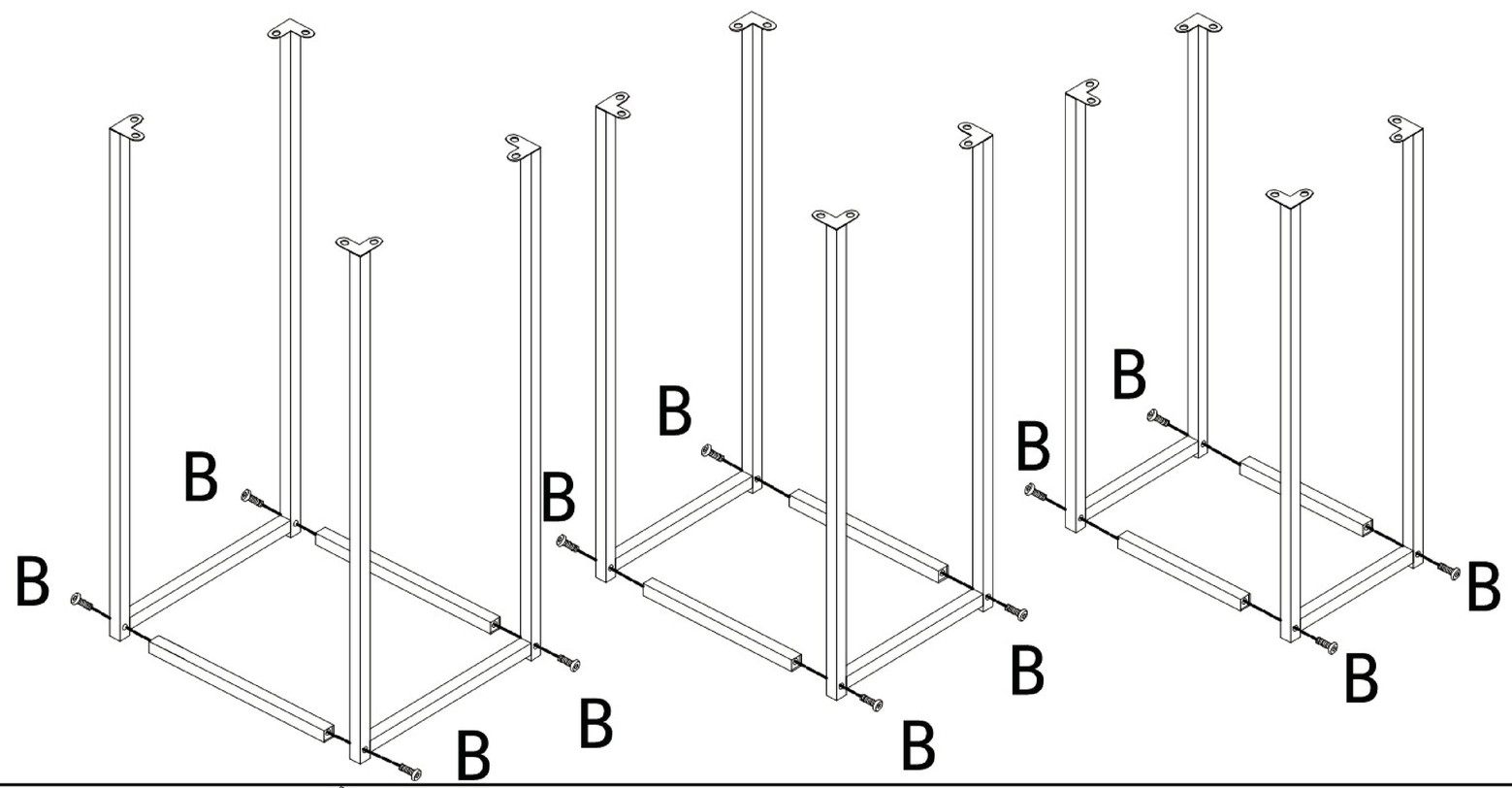
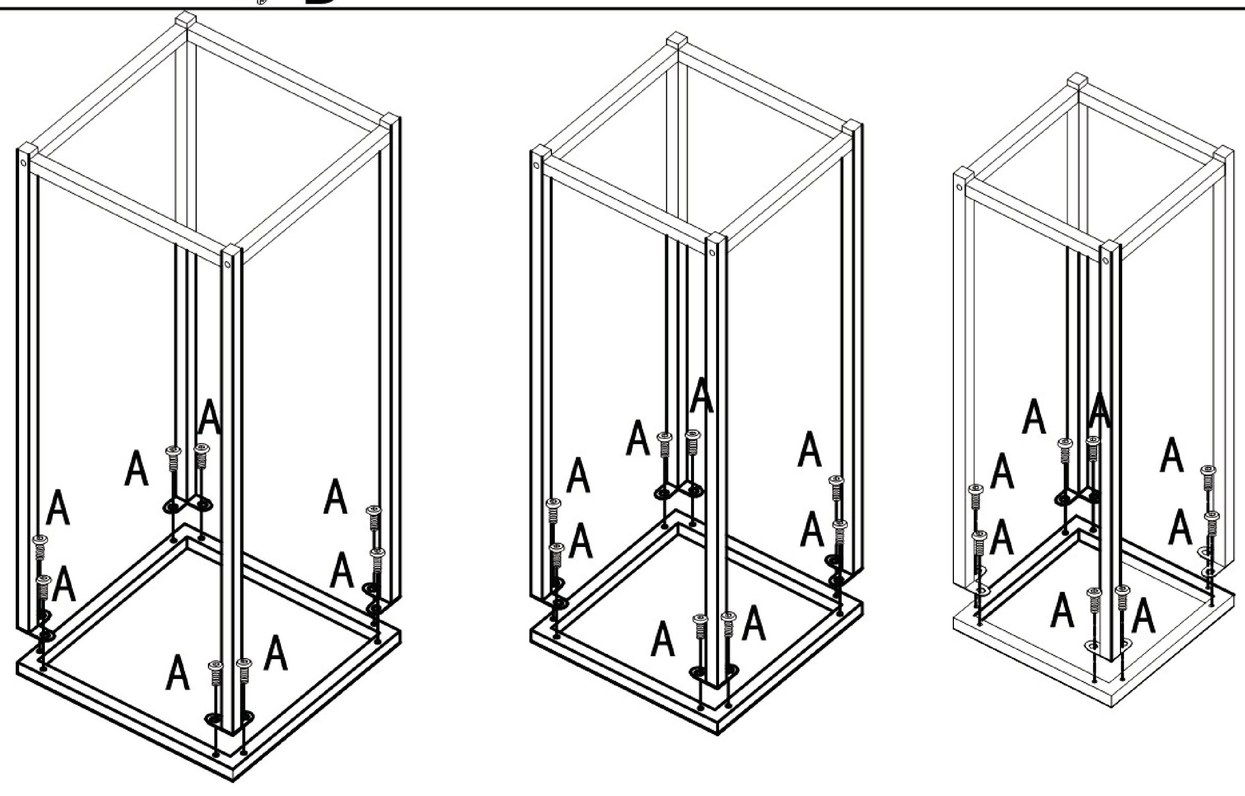
STEP 2: