17130164-01
SIDEBOARD

BDSK Handels GmbH & Co.KG
Mergentheimer Straße 59
DE-97084 Würzburg
E-Mail:Info@xxxlutz.at

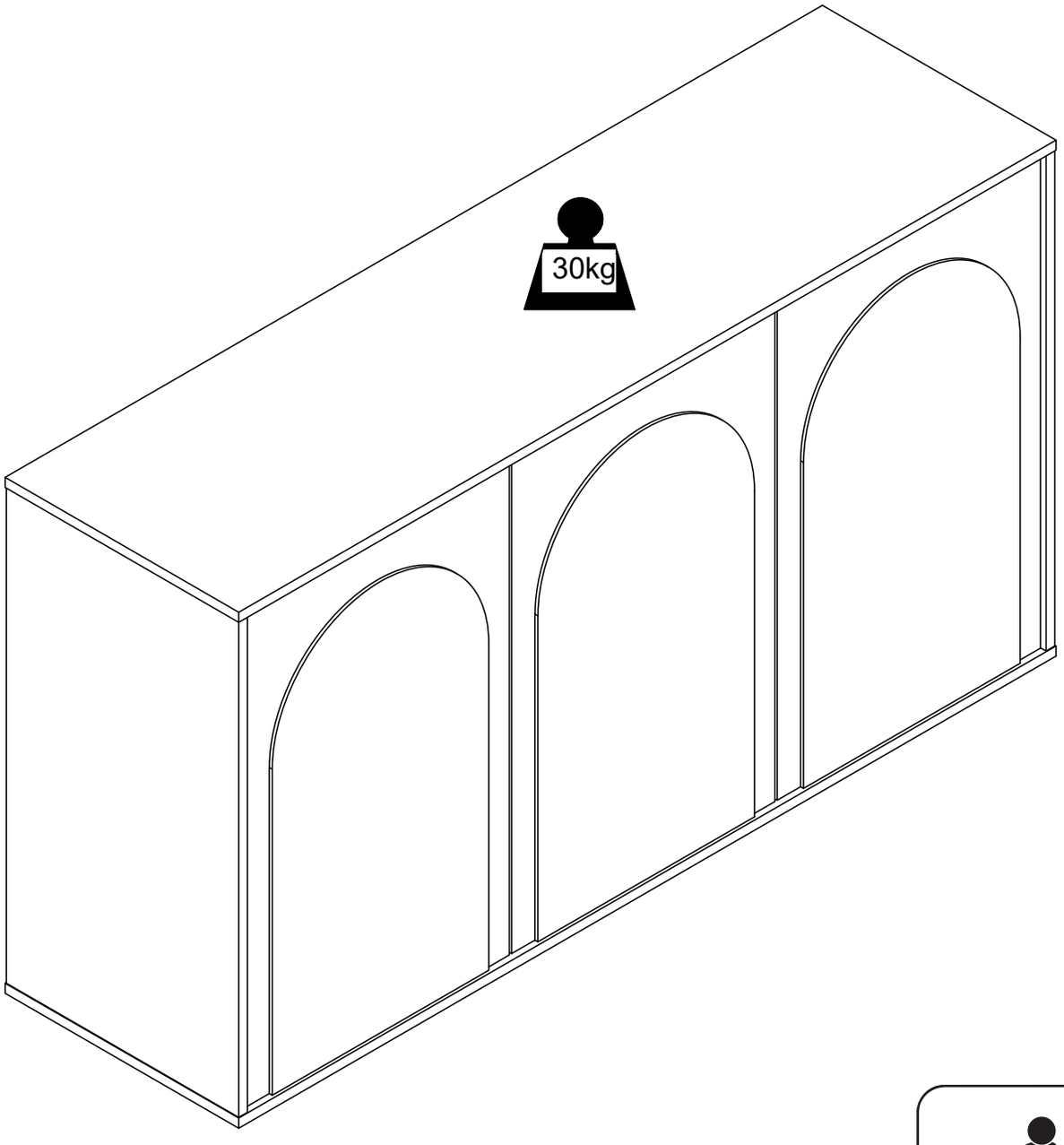



22
PAP

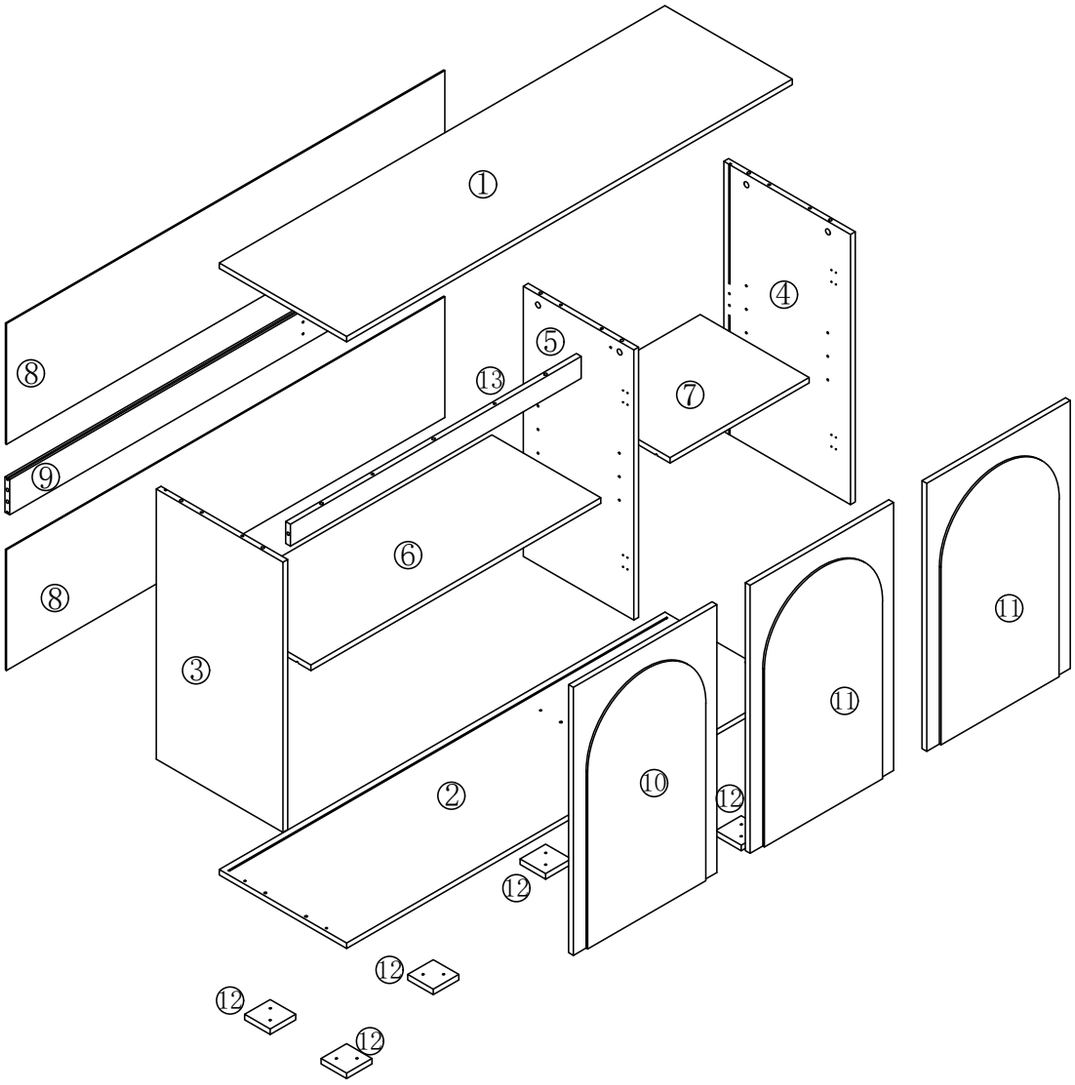

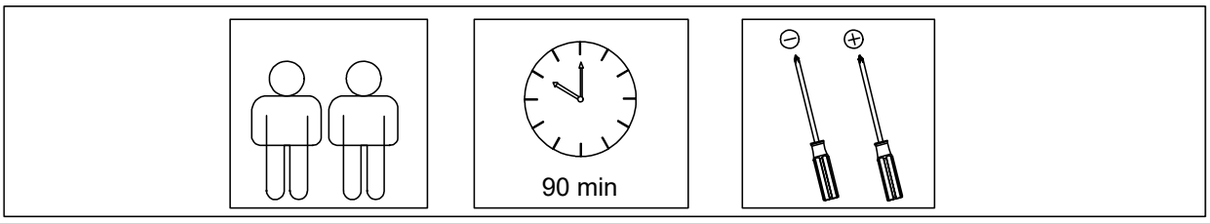

A ×15	B ×15	C ×14	D ×10	E ×58	F ×14	G ×9
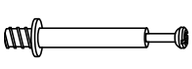		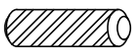	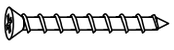		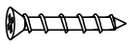	
M6x35MM	φ15x10	Φ 6x30	M4x40MM	M3.5x14MM	M4x20MM	M3x12MM

H ×6	I ×6	J ×8	K ×3	L ×16	M ×2	N ×2
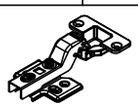				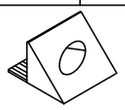	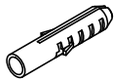	

O ×3
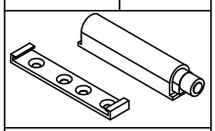

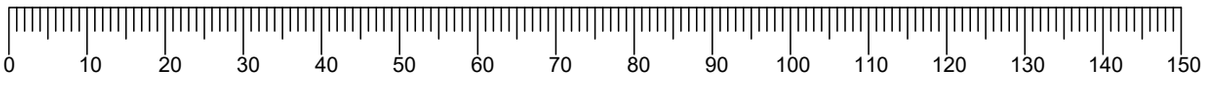

1

A	×15
M6x35MM	

G	×6
M3x14MM	

O	×3

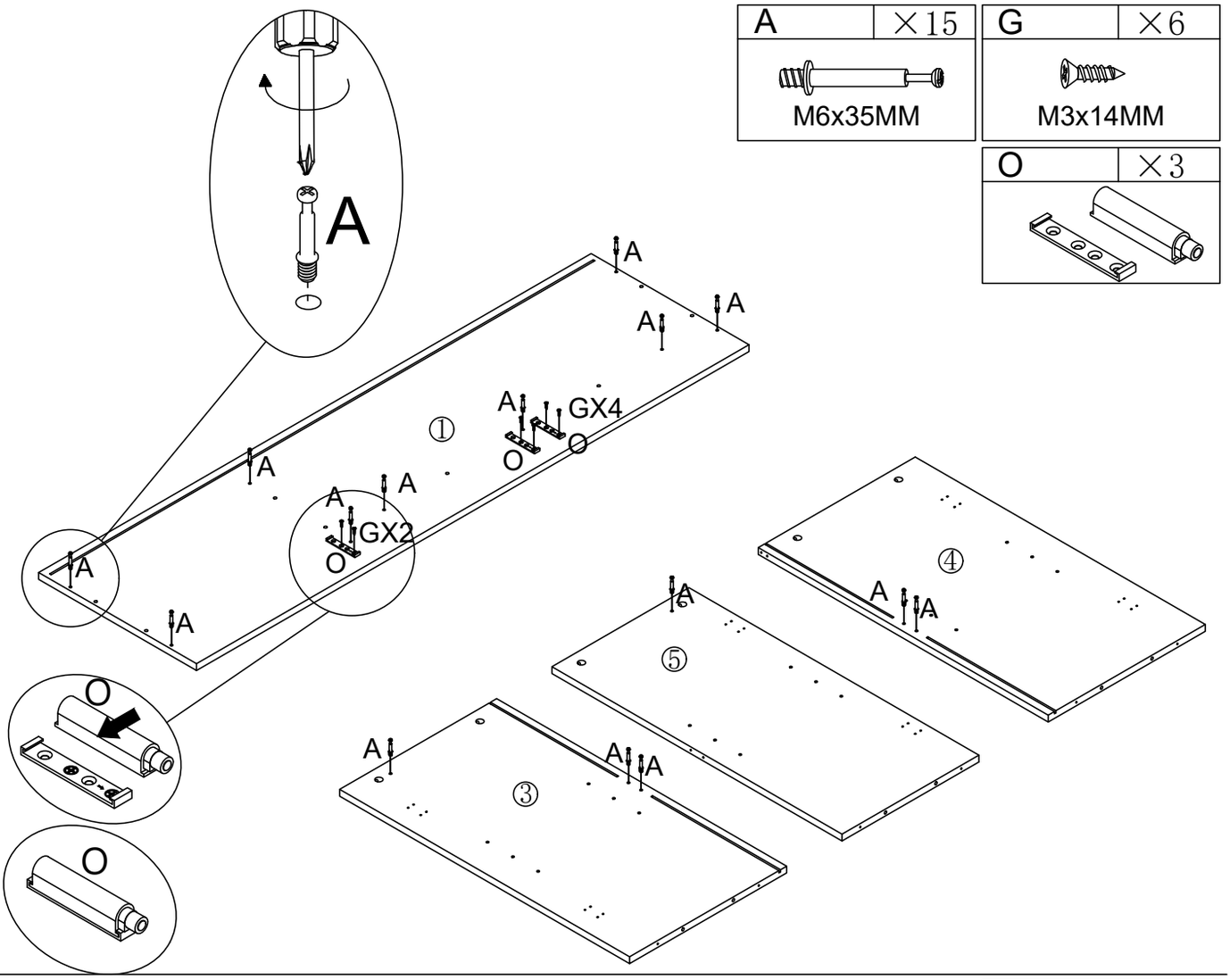

2

D	×2
M4x40MM	

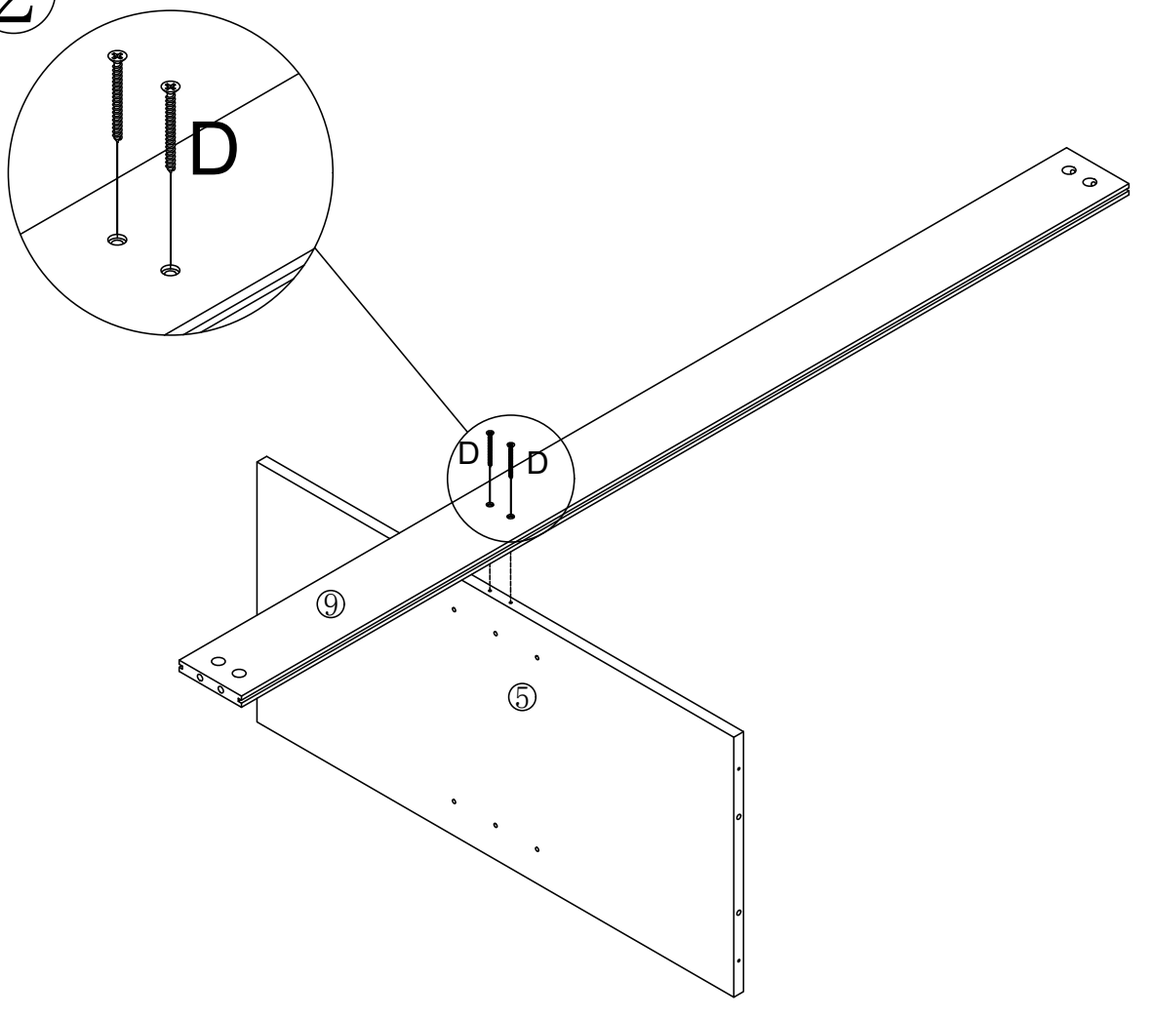

③

B	×4
φ15x10	

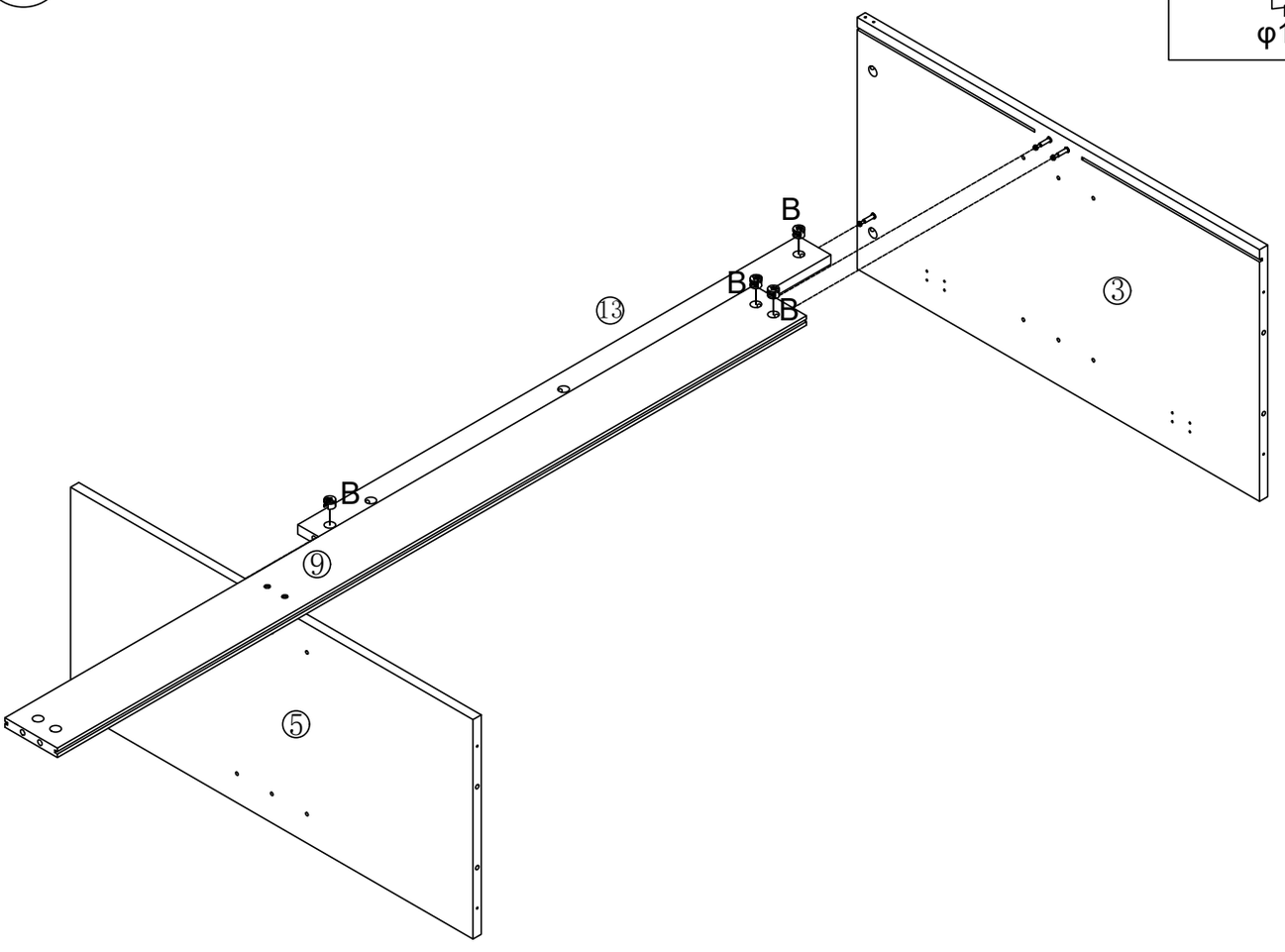

④

B	×2
φ15x10	

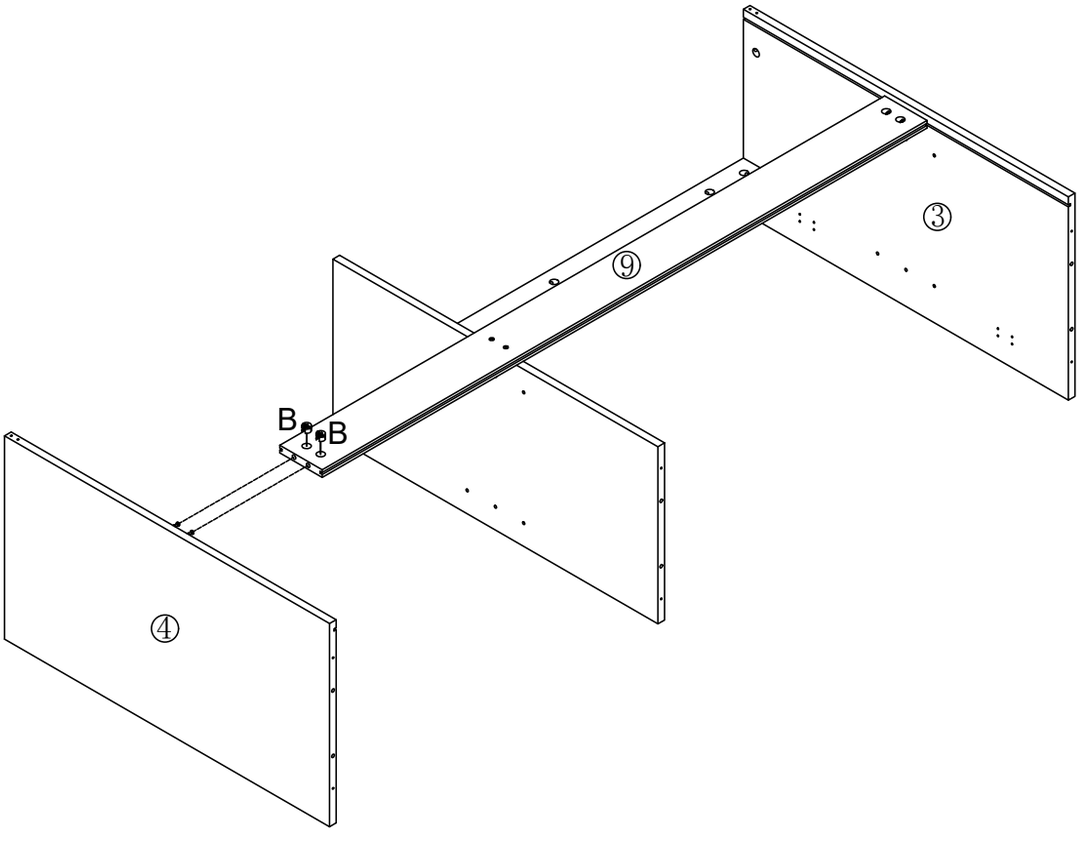

5

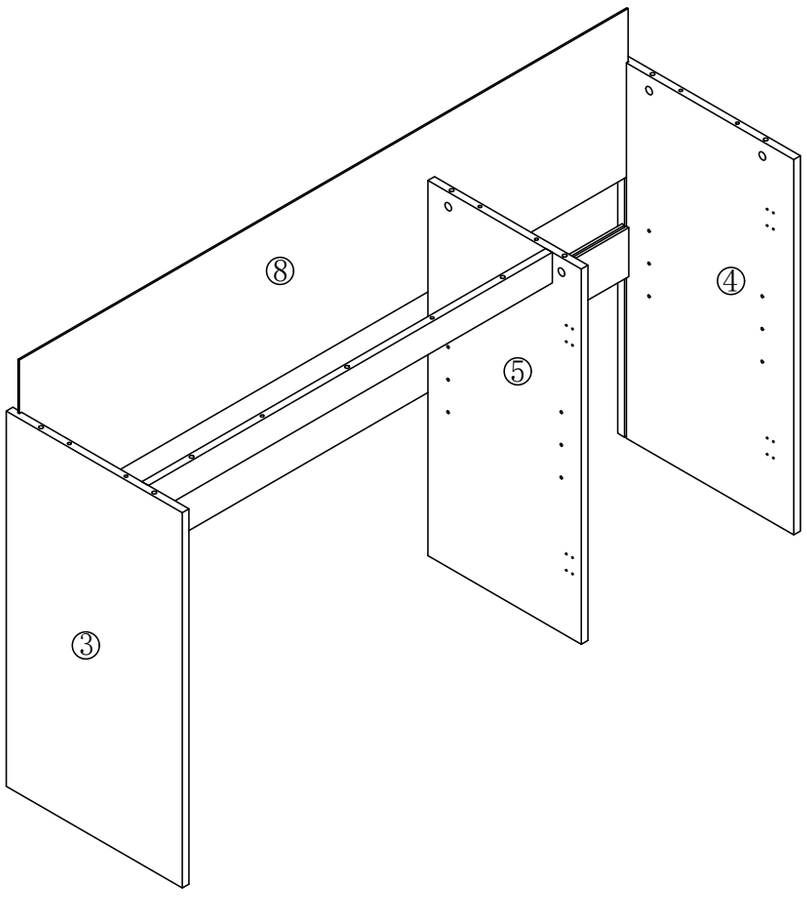

6

B	×9
φ15x10	

C	×8
φ6x30	

I	×6

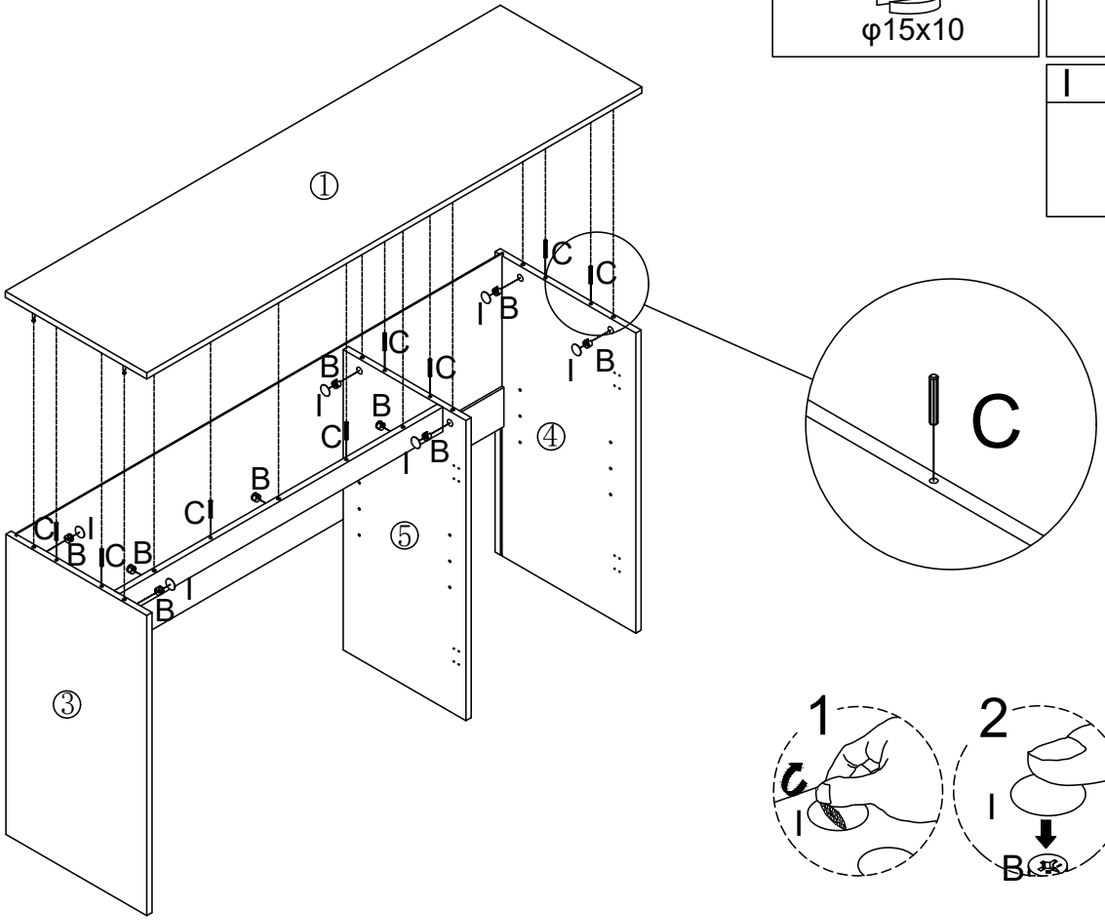

7

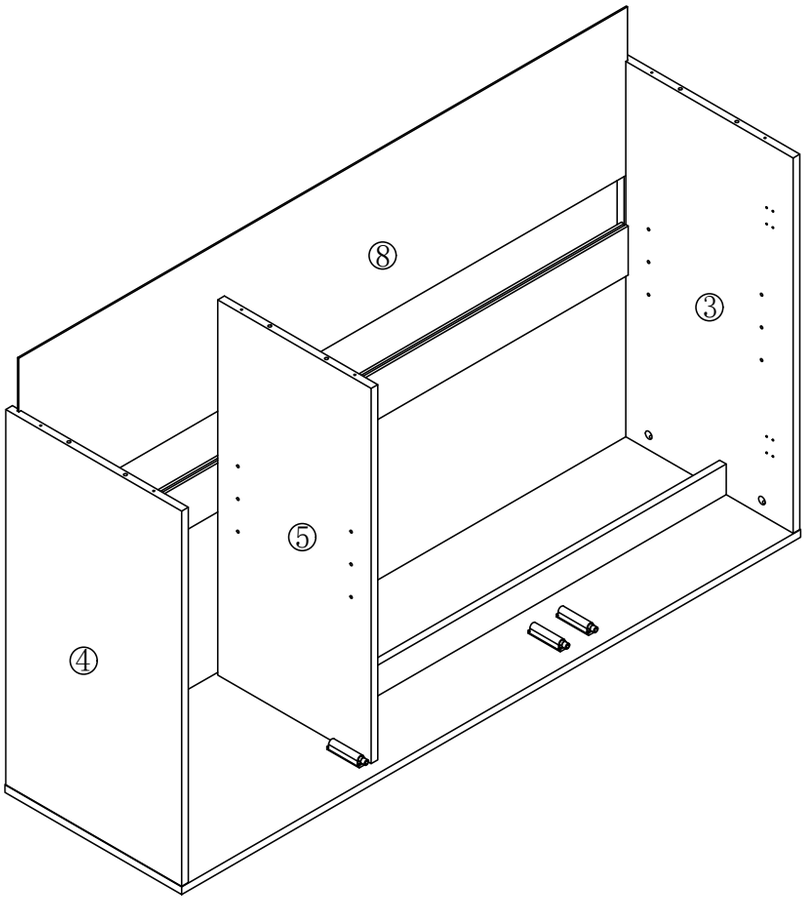

8

C	×6
φ6x30	

D	×6
M4x40MM	

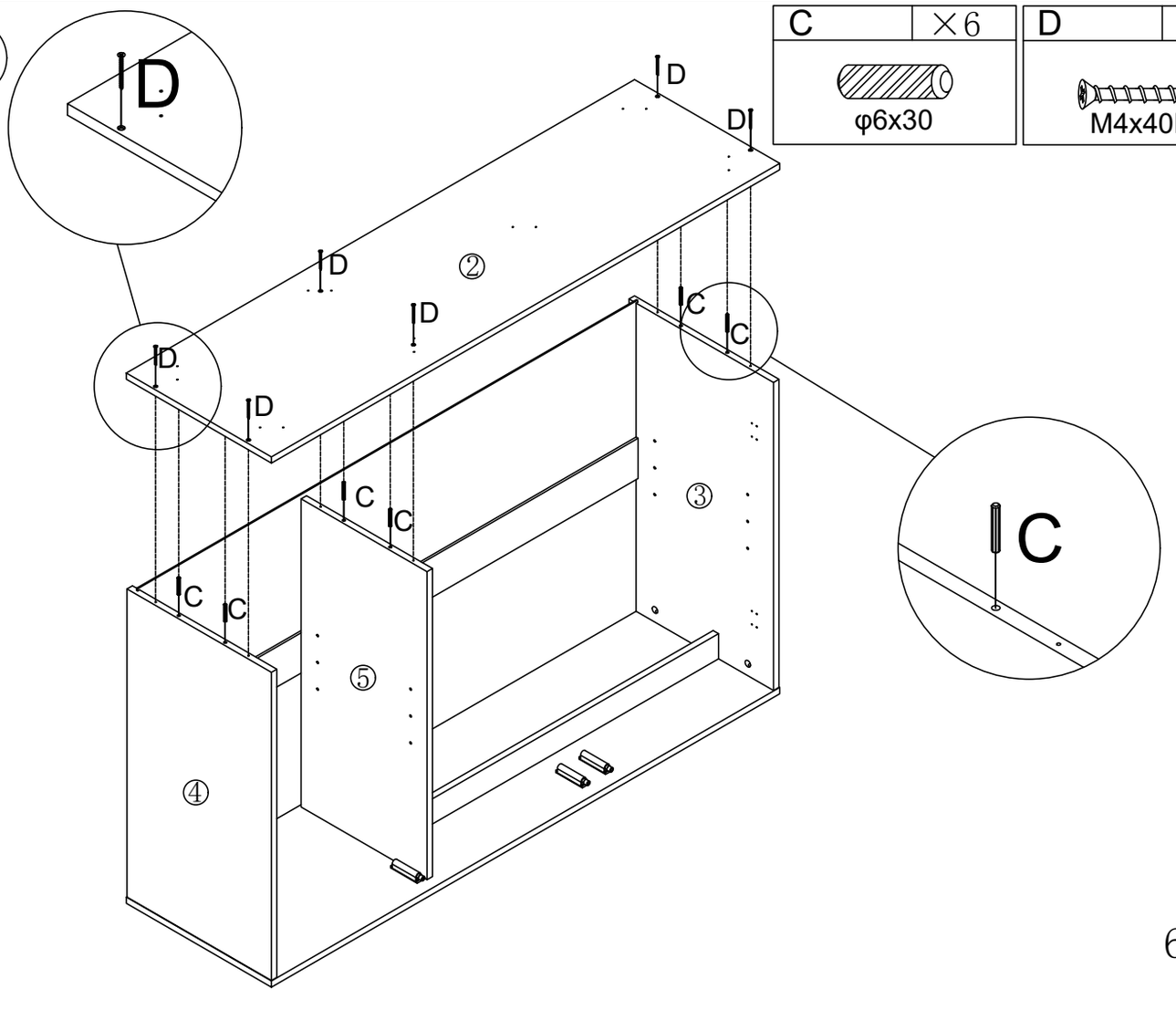

9

F	×14
M4x20MM	

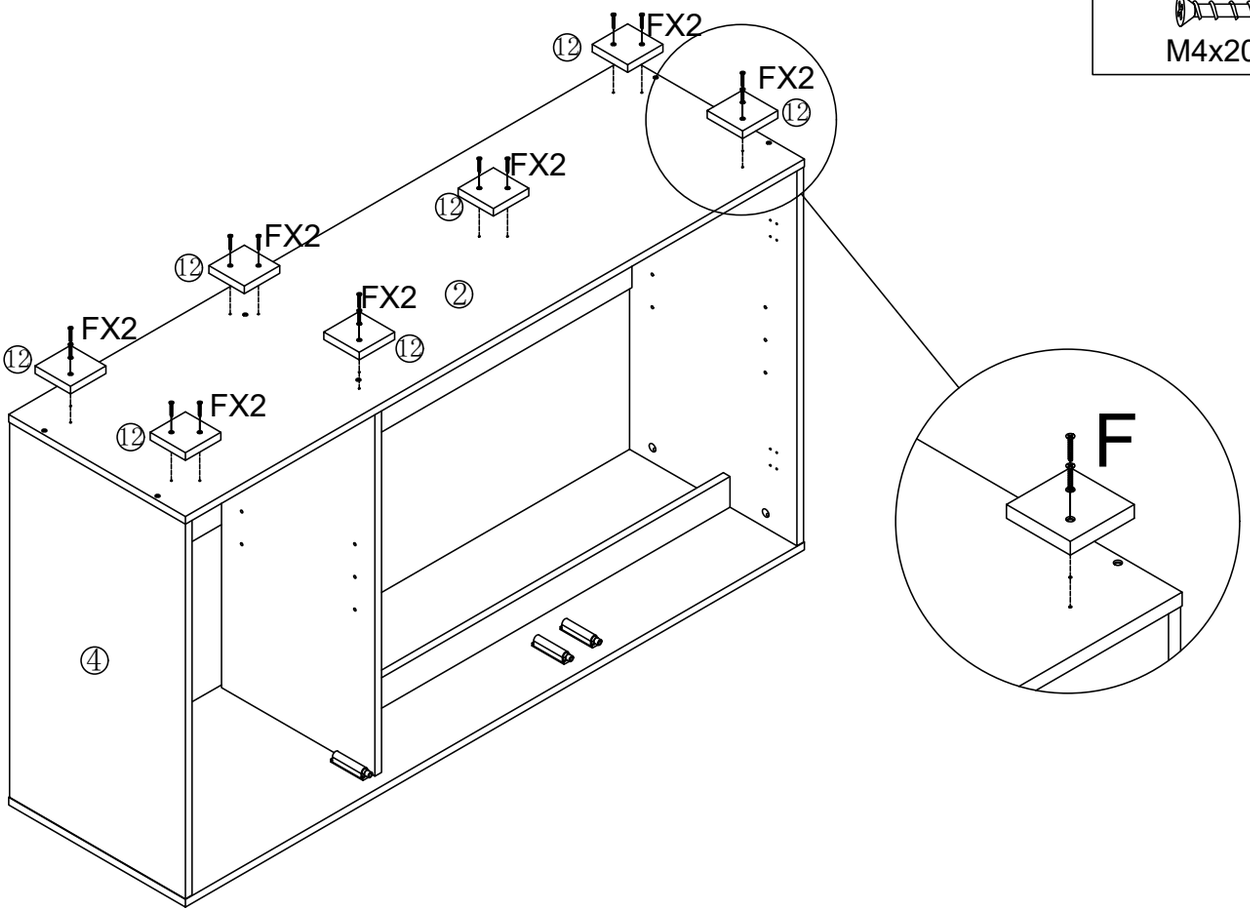

10

L	×16

E	×22
M3.5x14MM	

N	×2

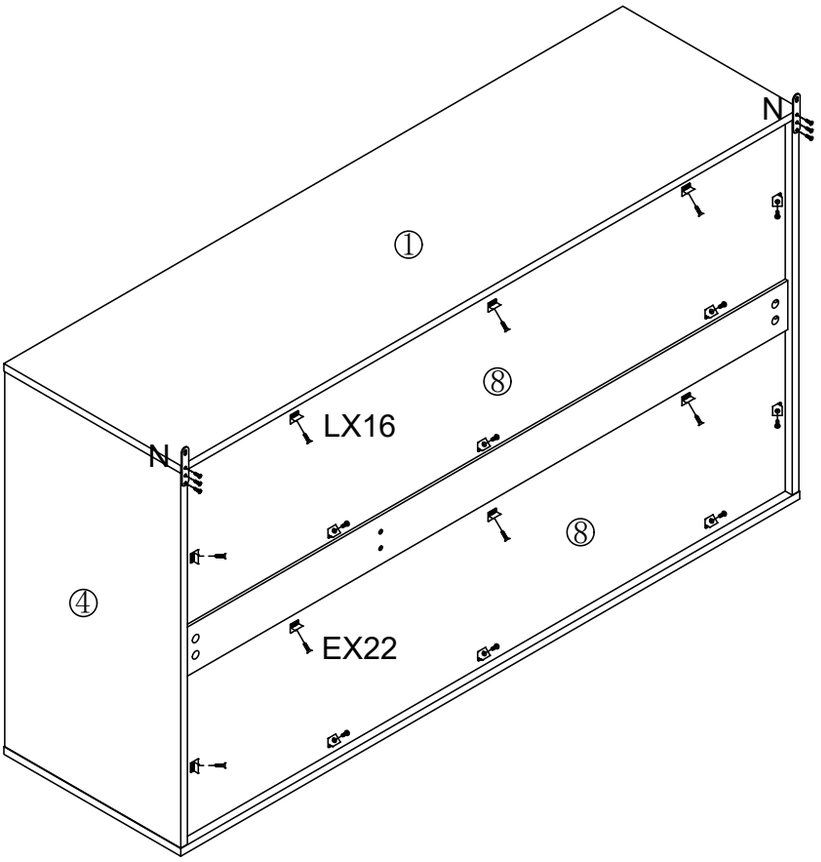

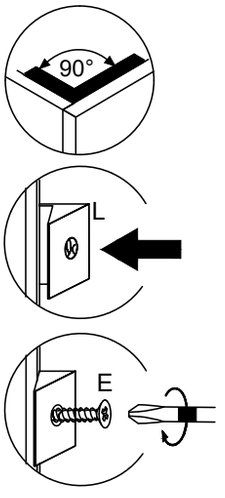

11

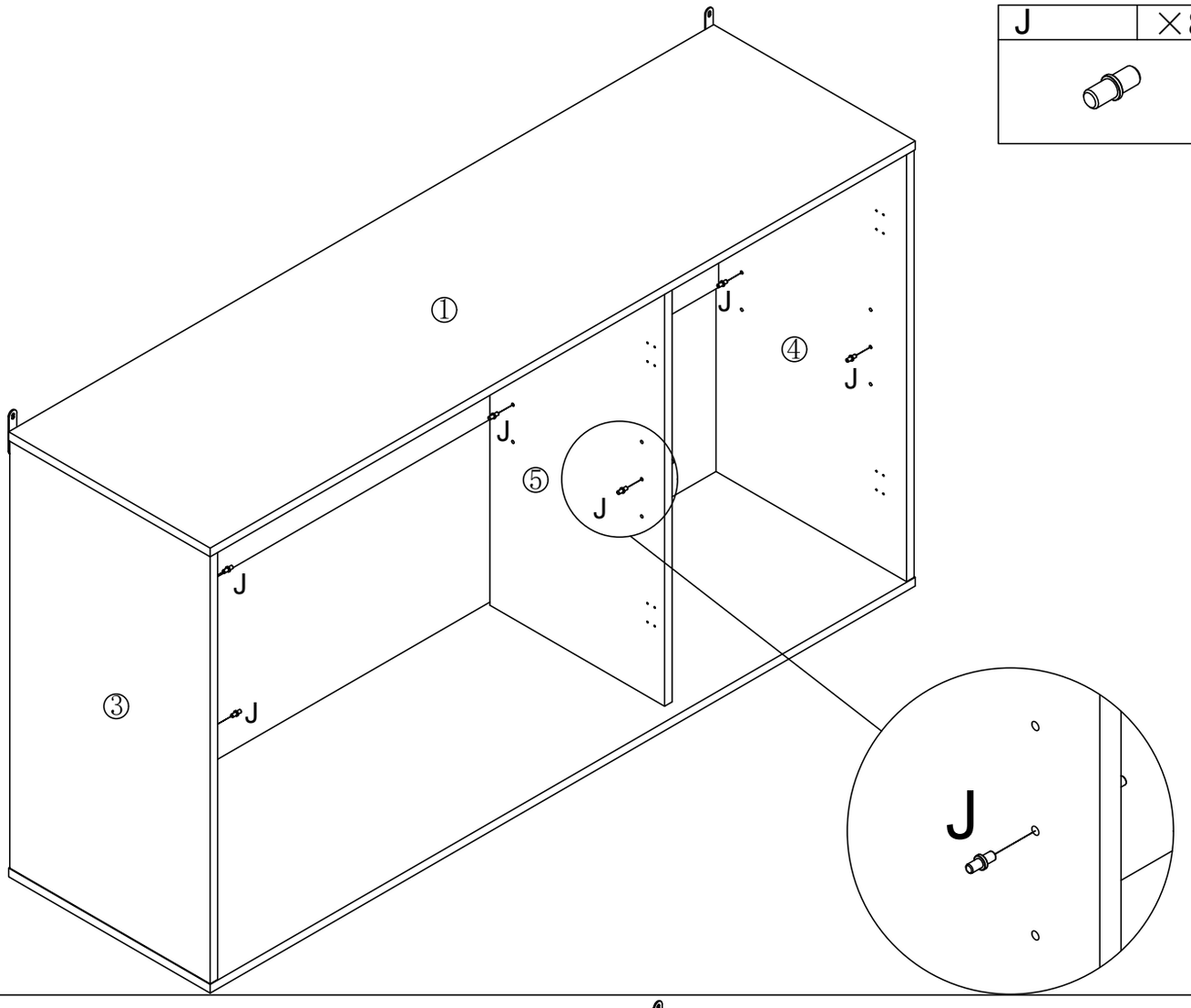

12

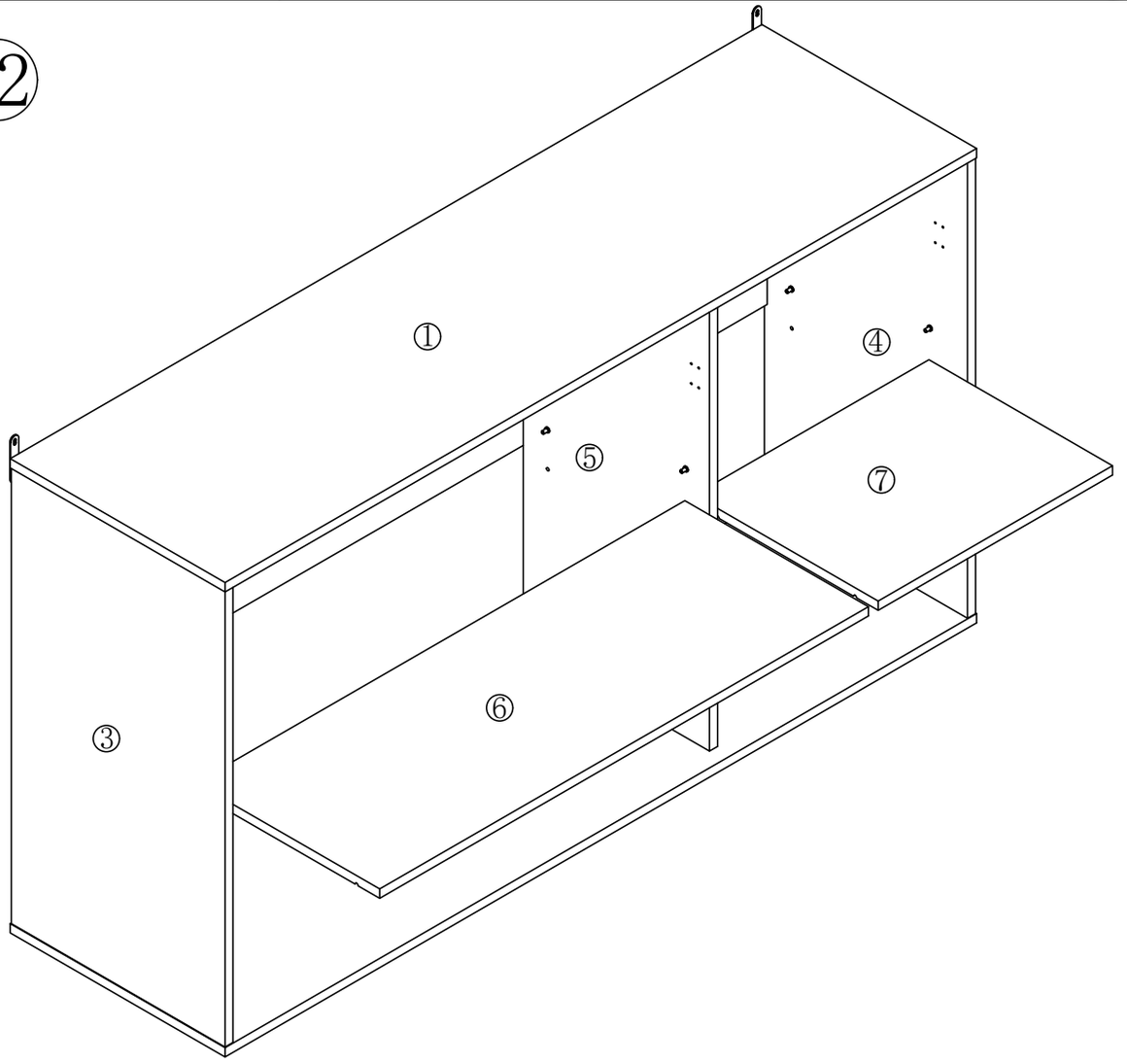

⑬

E	×12	H	×6
M3.5x14MM			
G	×3	K	×3
M3x14MM			

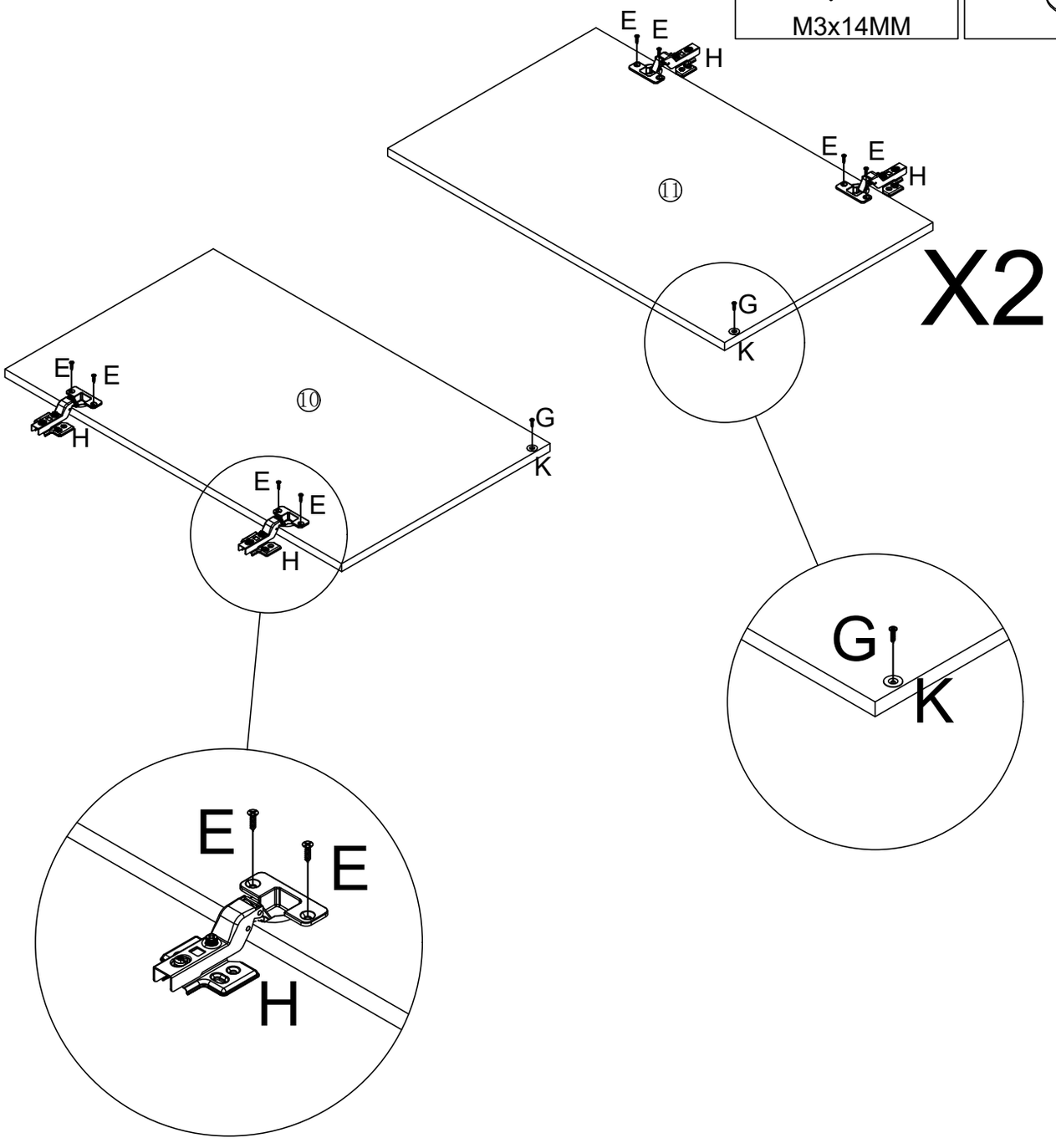

⑭

E	×24
M3.5x14MM	

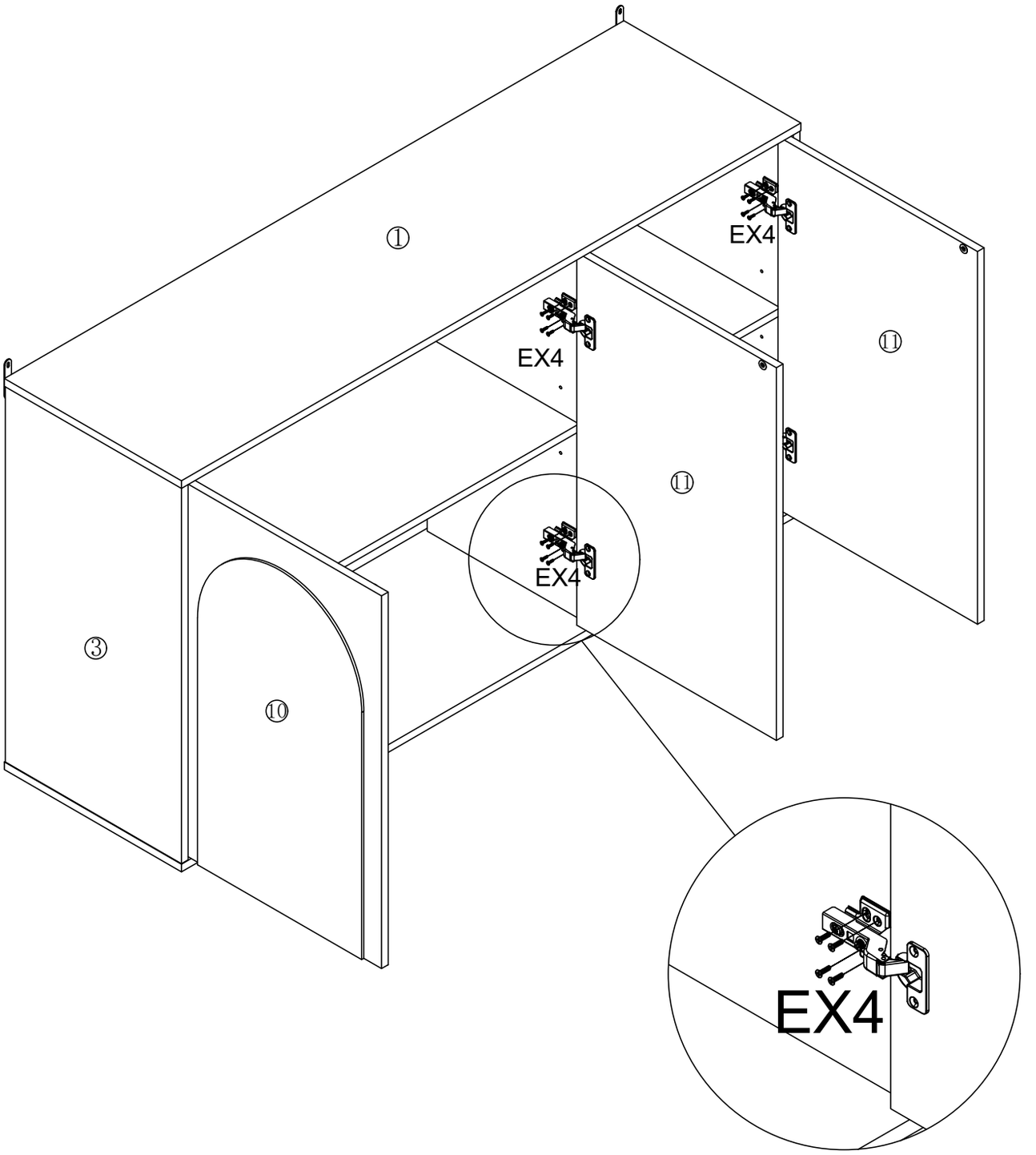

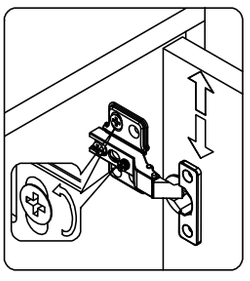

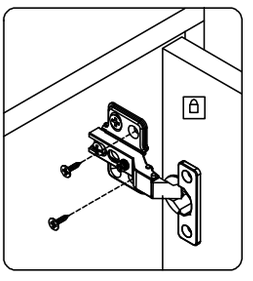

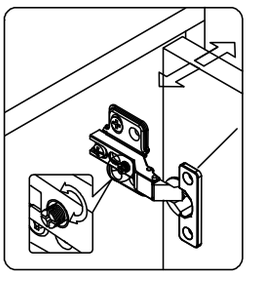

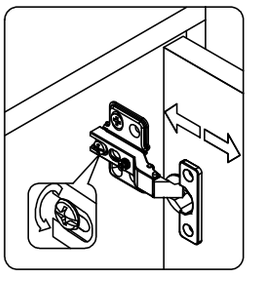

15

D	×2
M4x40MM	

M	×2

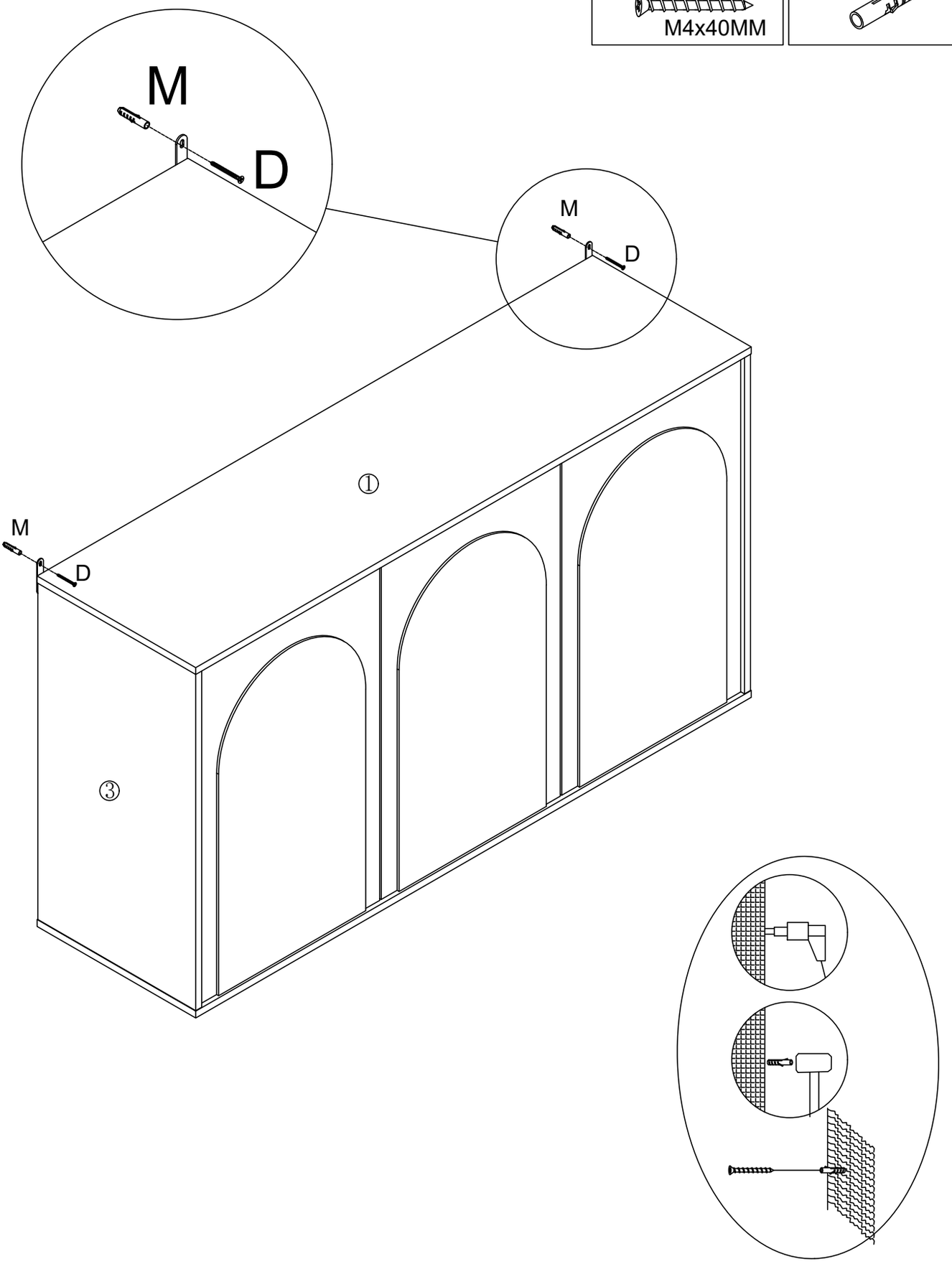

16

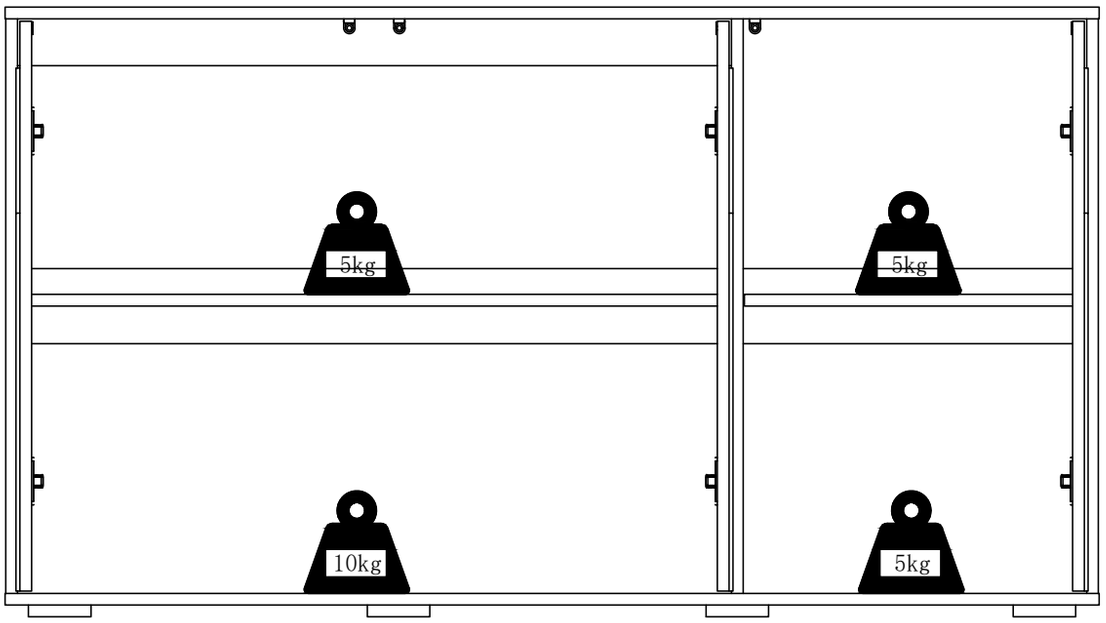

17

