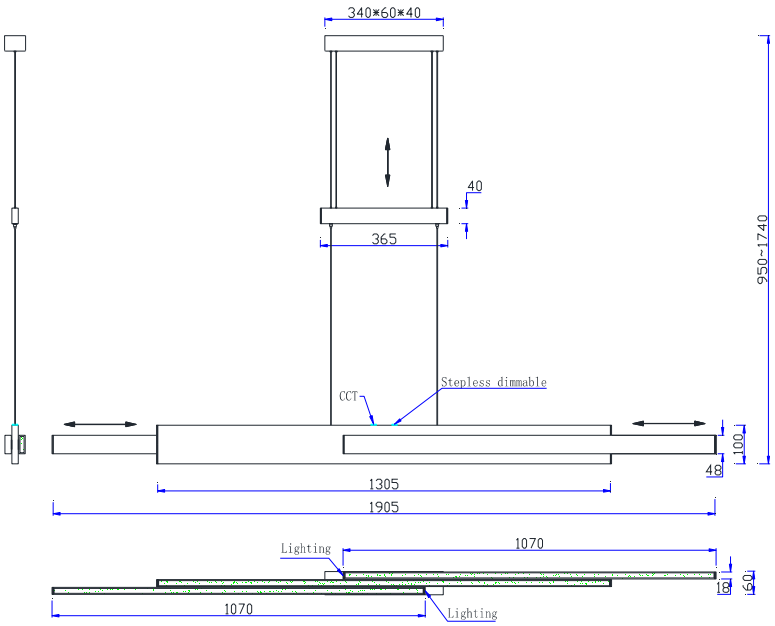
340*60*40
40
365
950~1740
Stepless dimmable
CCT
100
48
1305
1905
Lighting
1070
60
10
1070
Lighting

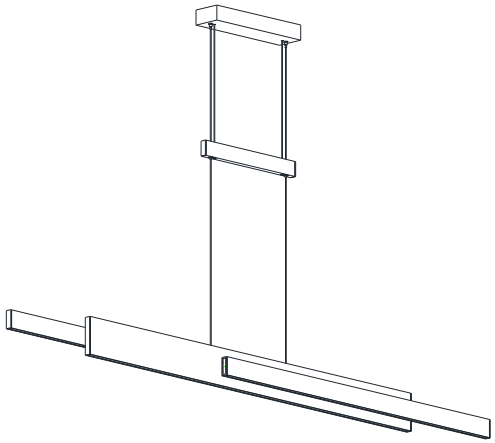

MR344531XX