BLANCO

# BLANCO LINUS-S HD Silgranit-Look

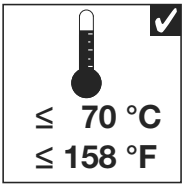


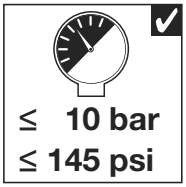

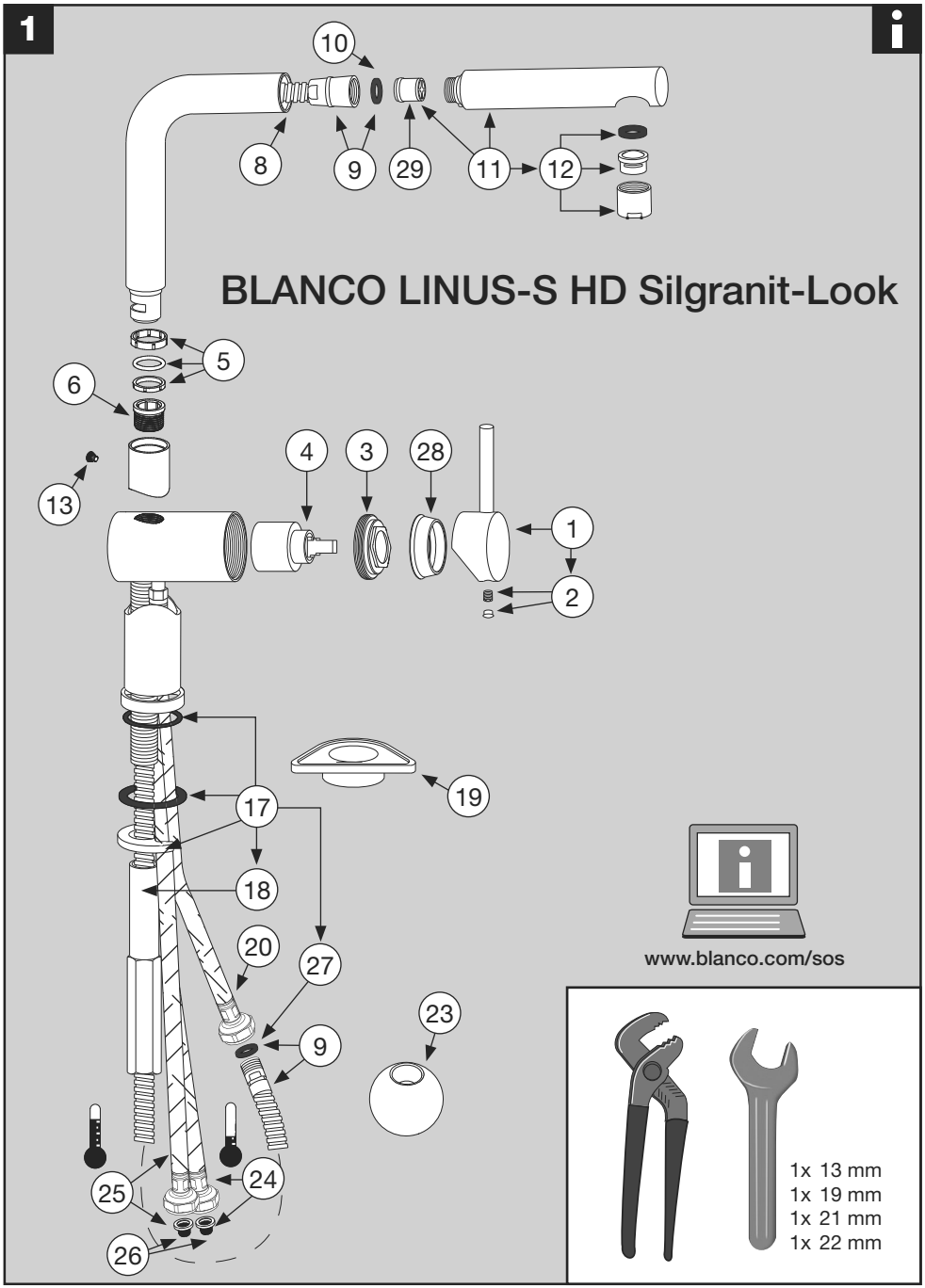
1
BLANCO LINUS-S HD Silgranit-Look
10
8
9
29
11
12
5
6
13
4
3
28
1
2
19
17
18
20
27
23
9
25
24
26
www.blanco.com/sos
1x 13 mm
1x 19 mm
1x 21 mm
1x 22 mm

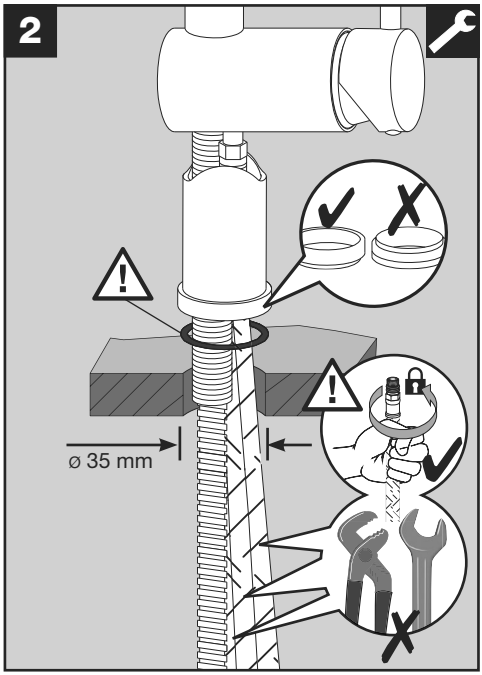
2
ø 35 mm

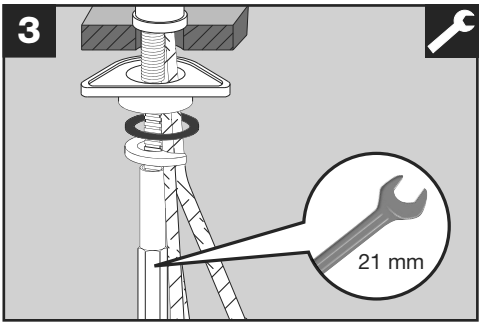
3
21 mm

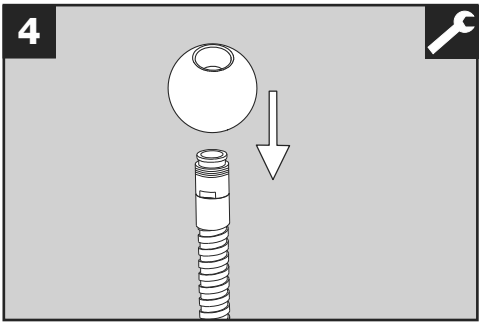
4

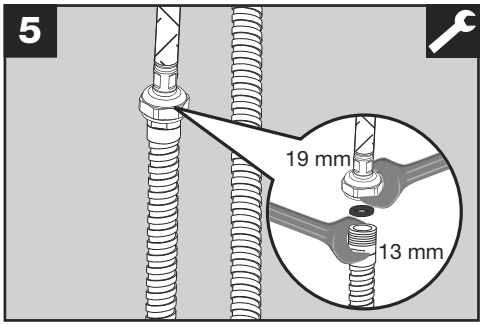
5
19 mm
13 mm

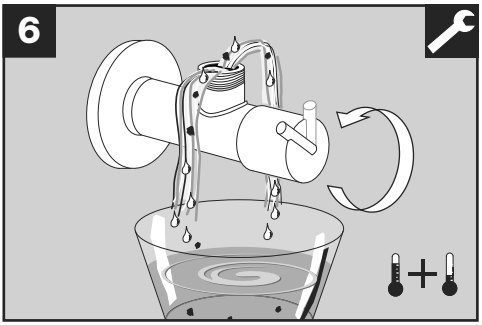
6

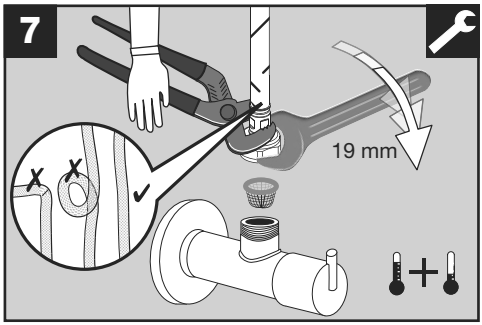
7
19 mm

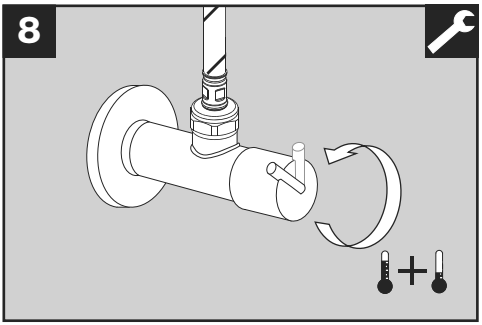
8

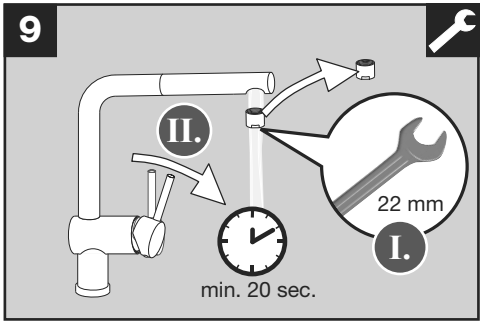
9
II.
22 mm
I.
min. 20 sec.

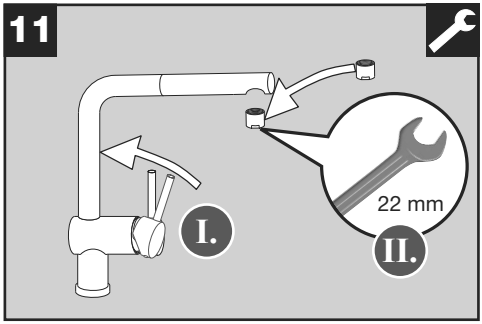
11
I.
22 mm
II.

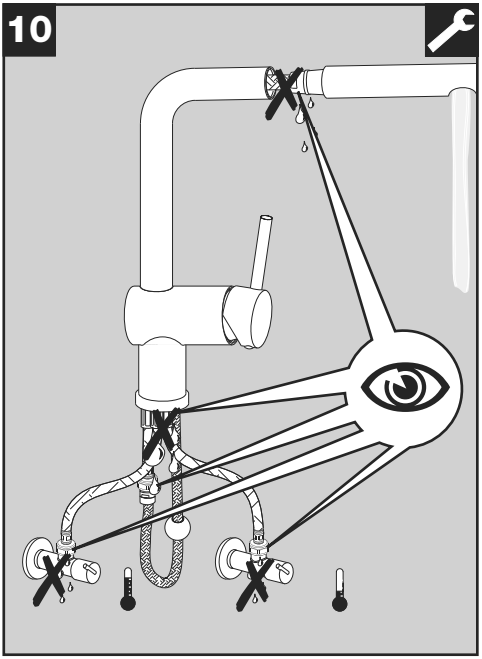
10

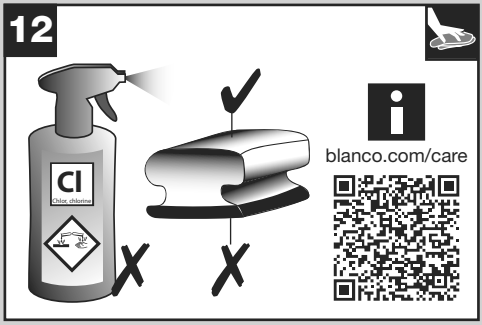
12
Cl
Chlor, chlorine
blanco.com/care

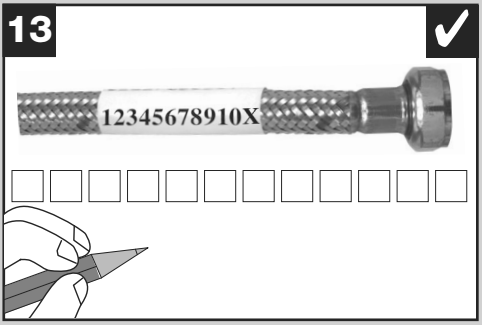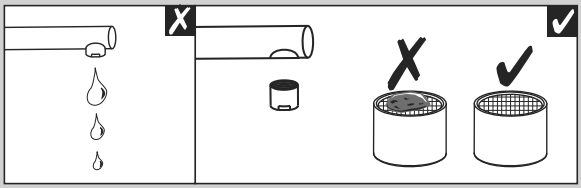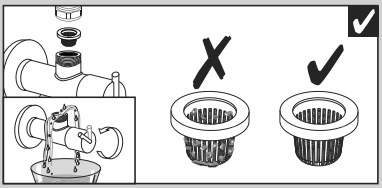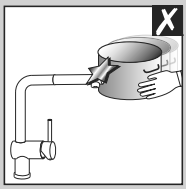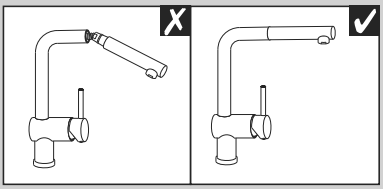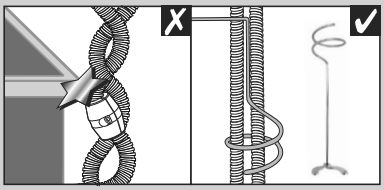
13
12345678910X