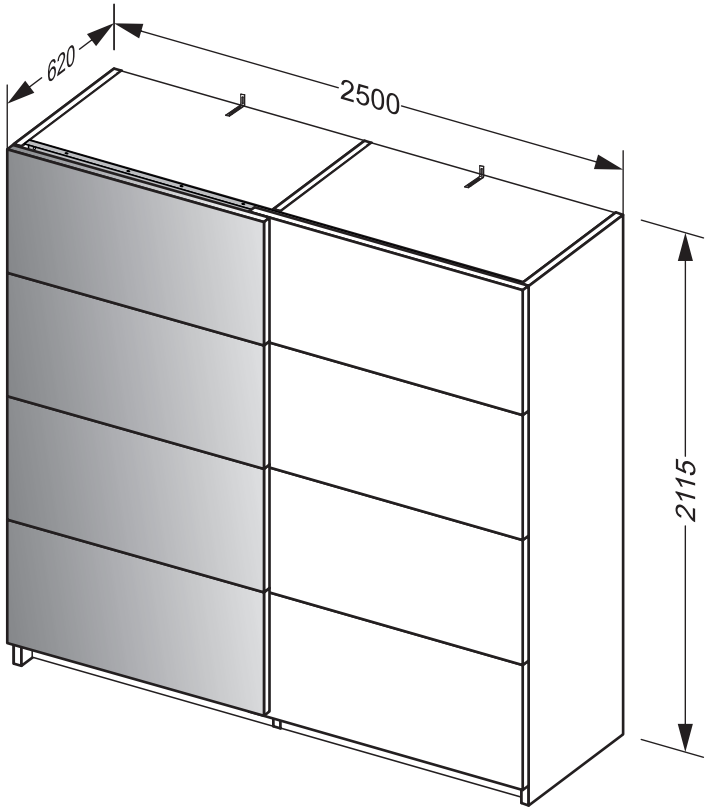
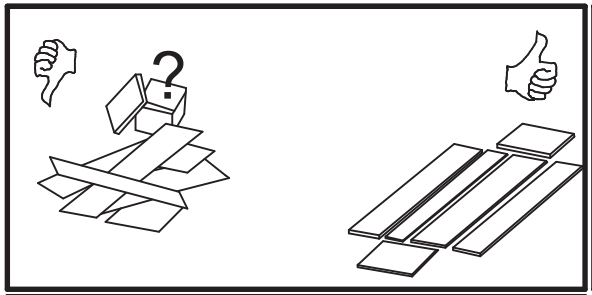
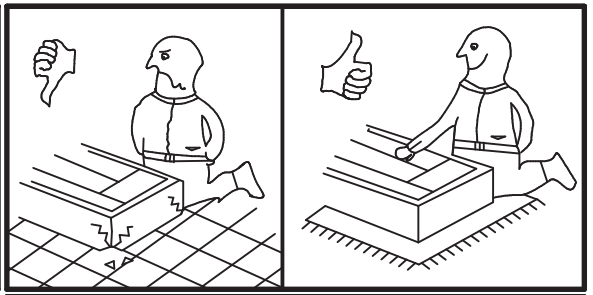


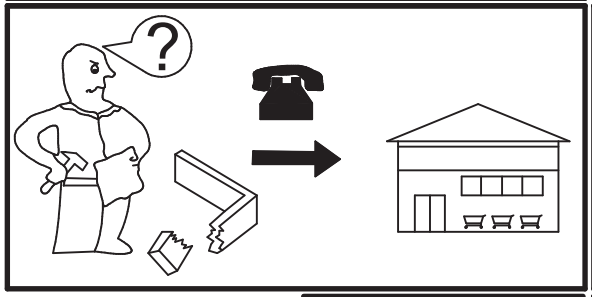
LIVY

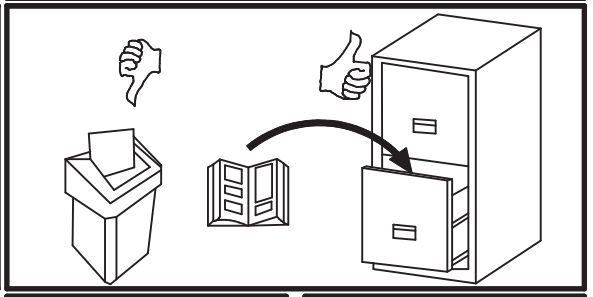
08850017/19



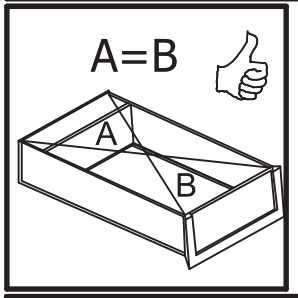


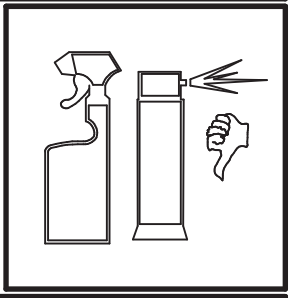




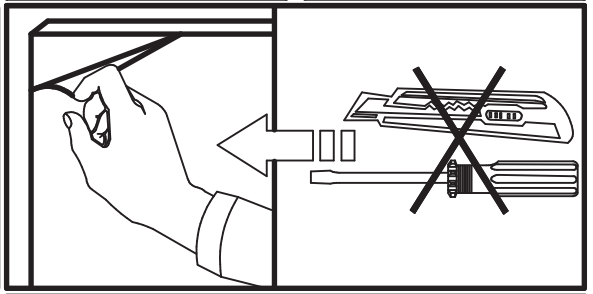


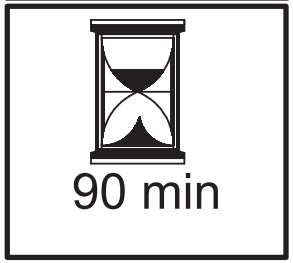


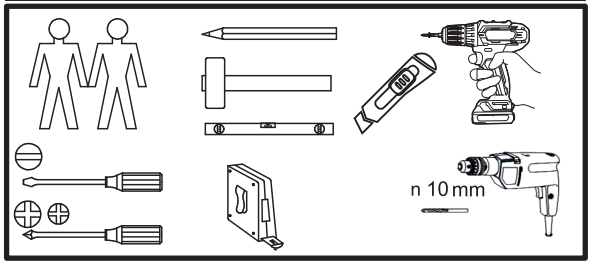


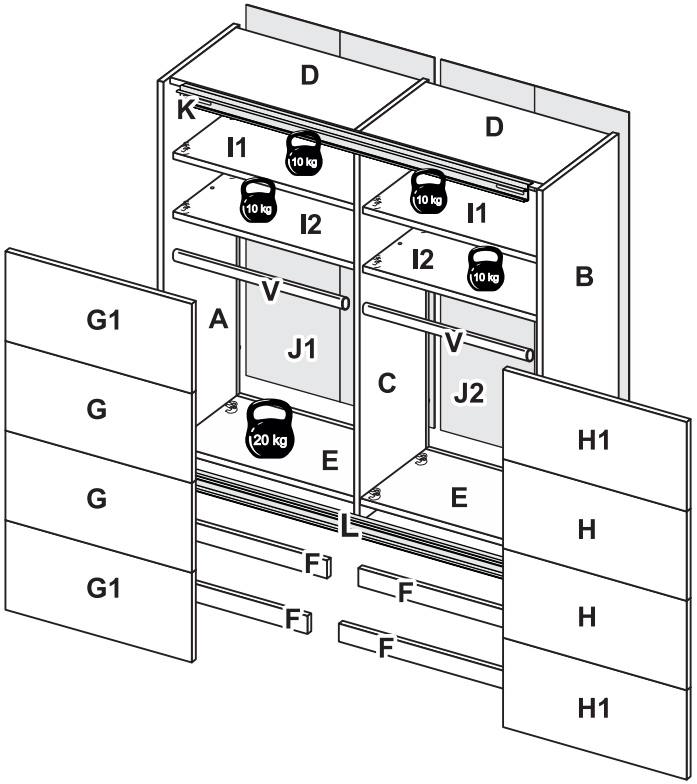






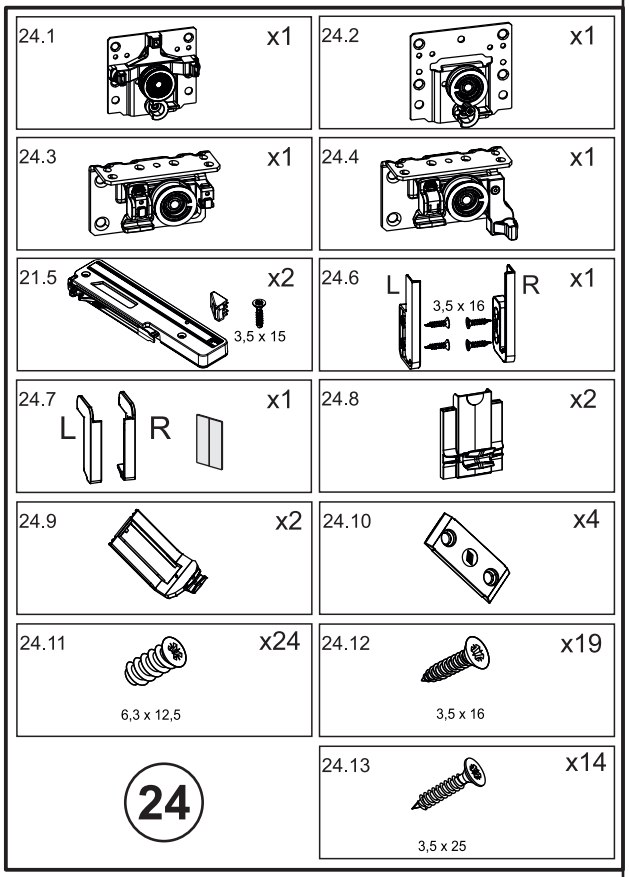


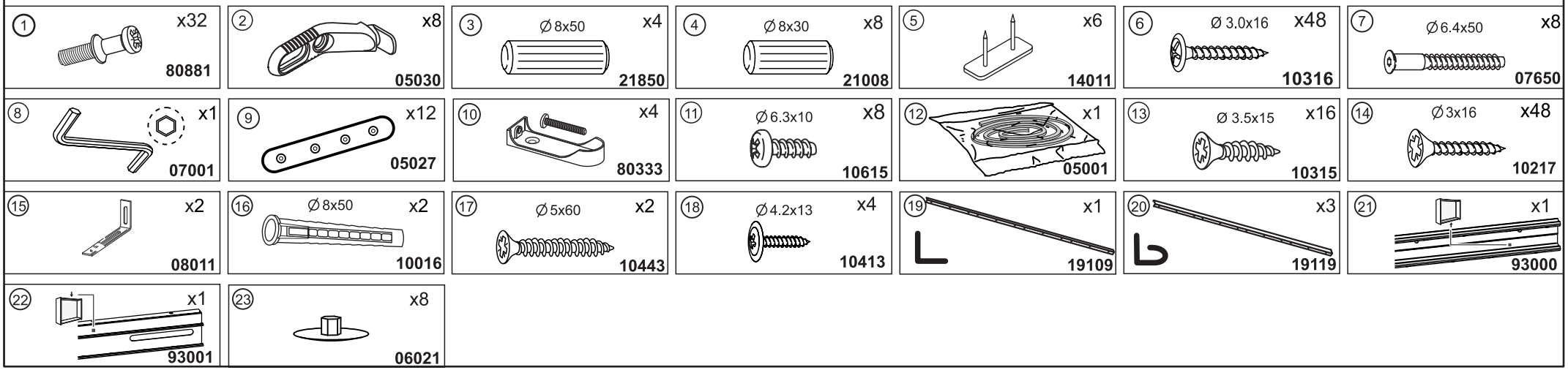


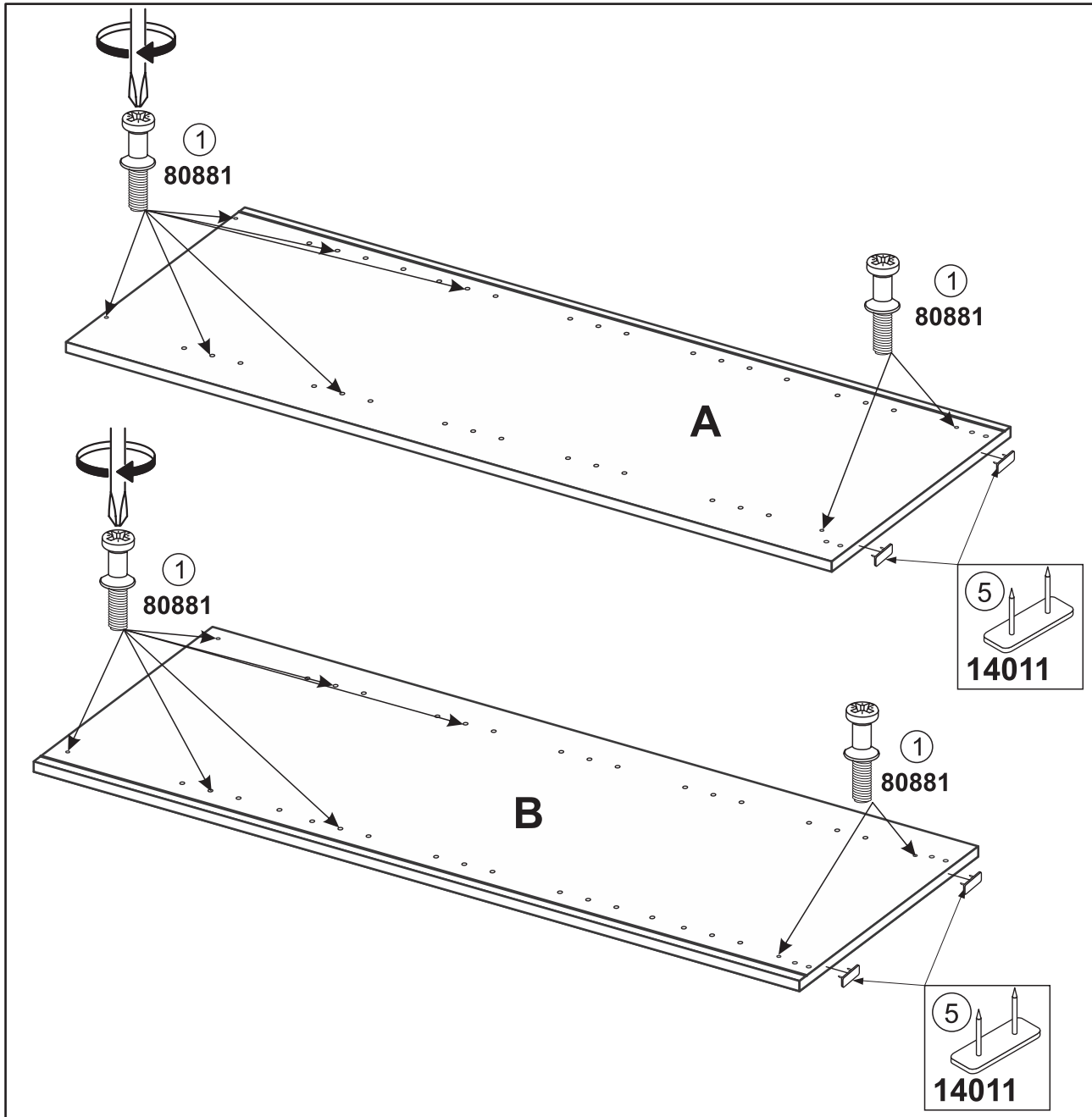


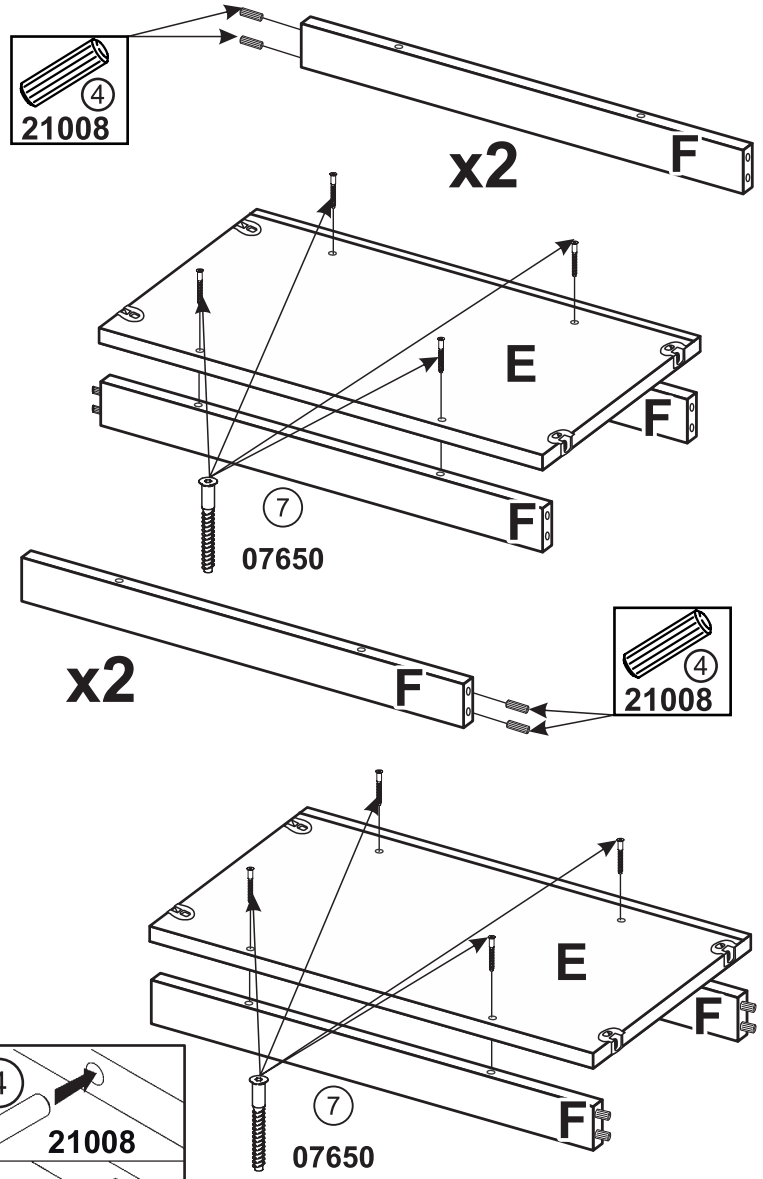
Teil		Maß				St
A	-	2102	x 580	x 16	- **x 1**	**1/7**
B	-	2102	x 552	x 16	- **x 1**	**1/7**
C	-	2102	x 535	x 16	- **x 1**	**2/7**
D	-	1226	x 535	x 16	- **x 2**	**4/7**
E	-	1226	x 535	x 16	- **x 2**	**4/7**
F	-	1226	x 60	x 16	- **x 4**	**4/7**
G	-	1012	x 512	x 16	- **x 2**	**7/7**
G1	-	1012	x 512	x 16	- **x 2**	**7/7**
H	-	1012	x 512	x 16	- **x 2**	**6/7**
H1	-	1012	x 512	x 16	- **x 2**	**6/7**
I1	-	1226	x 521	x 22	- **x 2**	**3/7**
I2	-	1226	x 521	x 22	- **x 2**	**3/7**
J1	-	2018	x 1234	x 3	- **x 1**	**2/7**
J2	-	2018	x 1234	x 3	- **x 1**	**2/7**
K	-	2466мм			- **x 1**	**5/7**
L	-	2462мм			- **x 1**	**5/7**
V	-	1219мм			- **x 2**	**4/7**

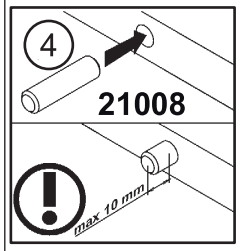




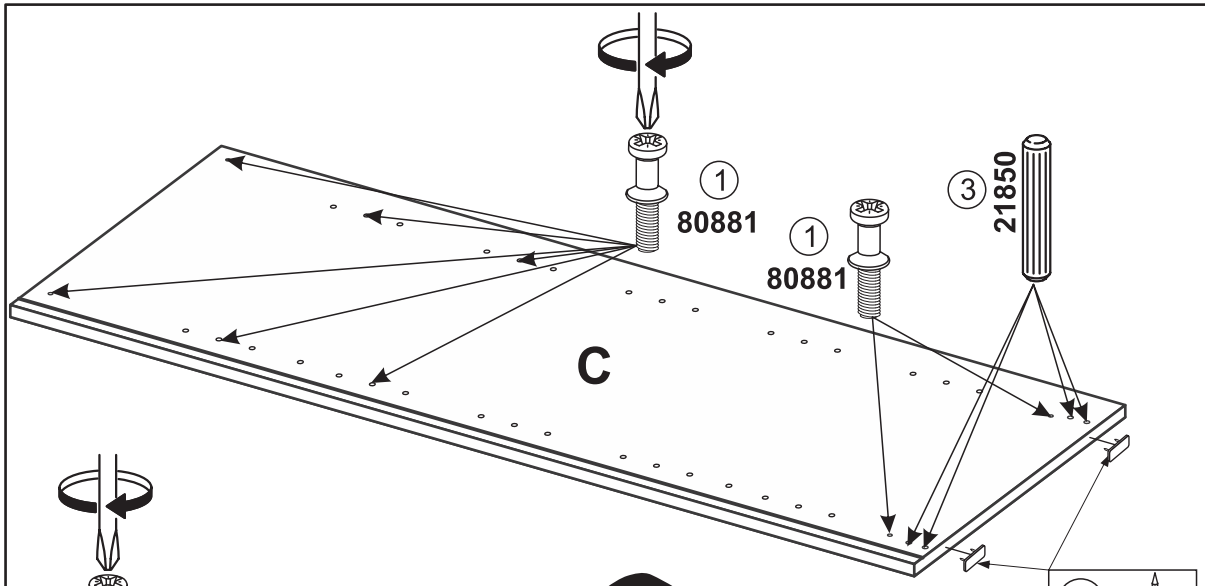


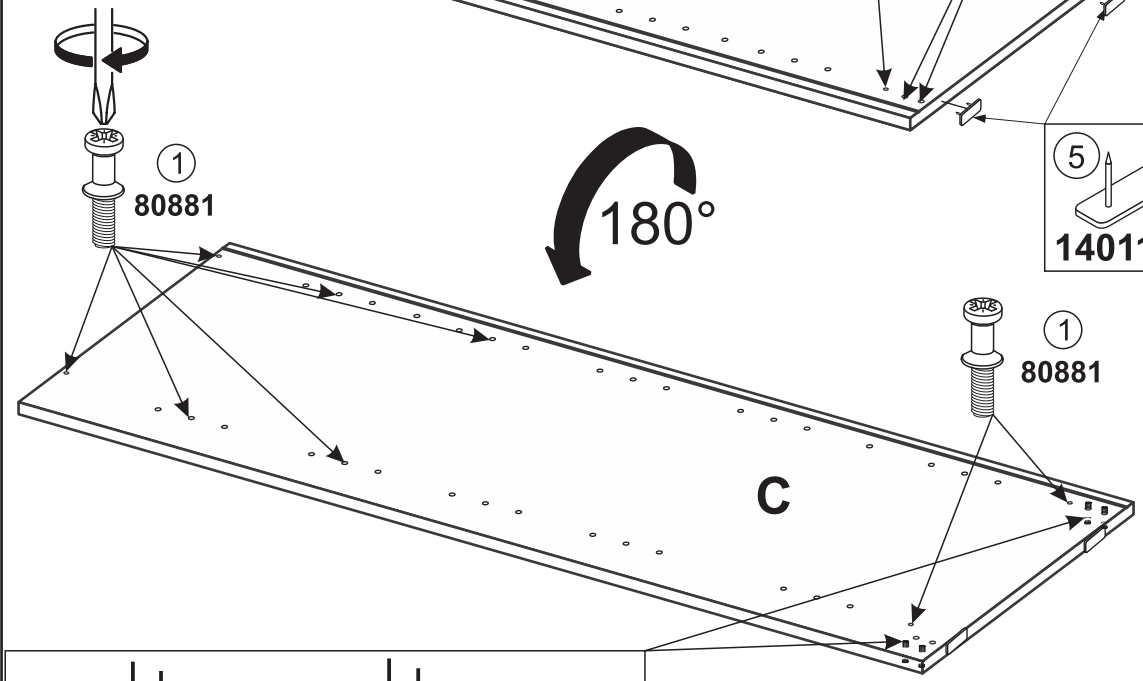


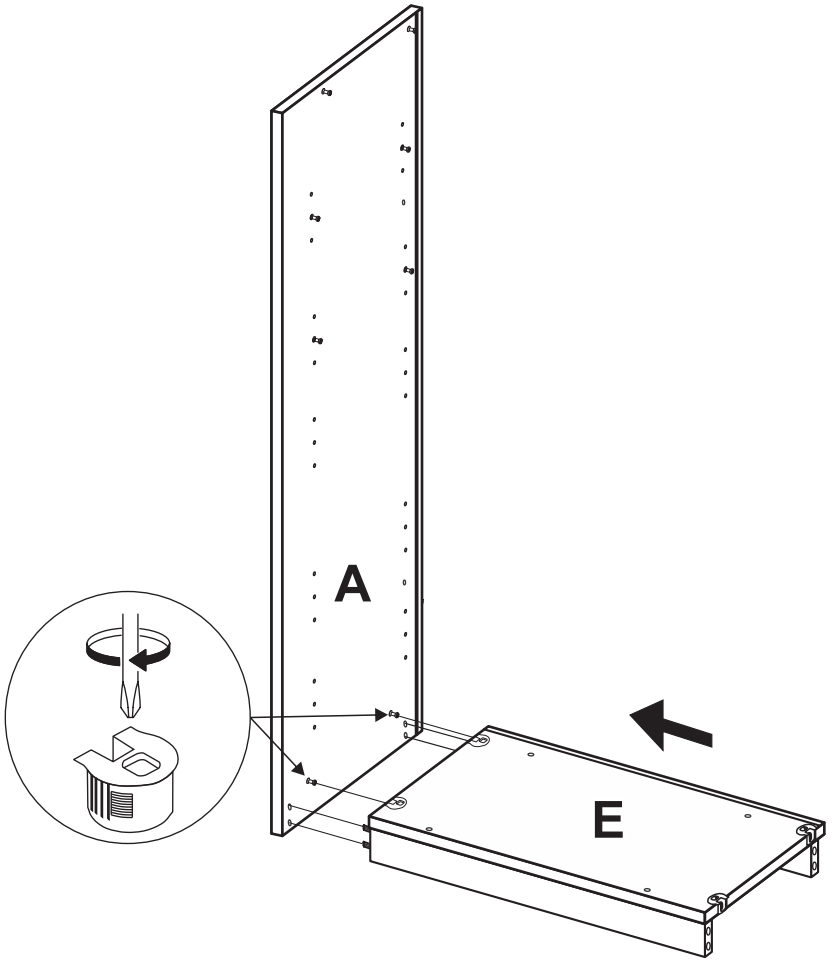


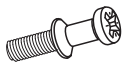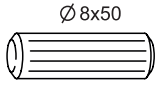
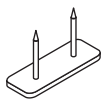


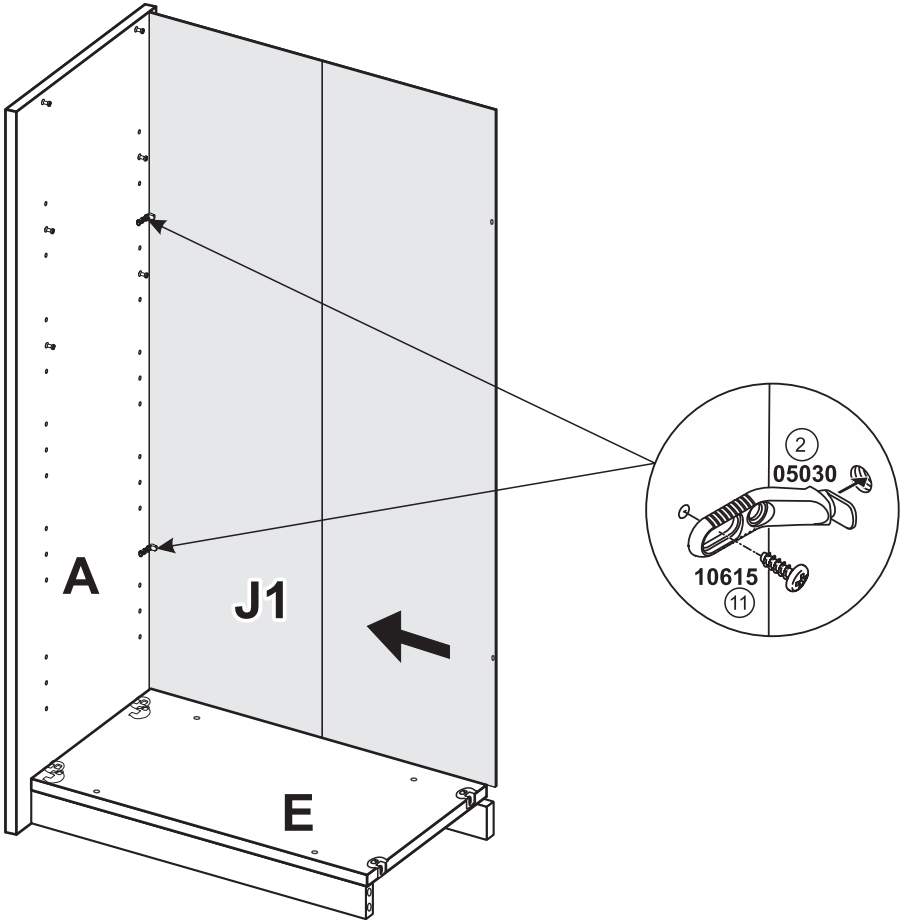
1	x16	80881
5	x4	14011
4	Ø 8x30 x8	21008
7	Ø 6.4x50 x8	07650

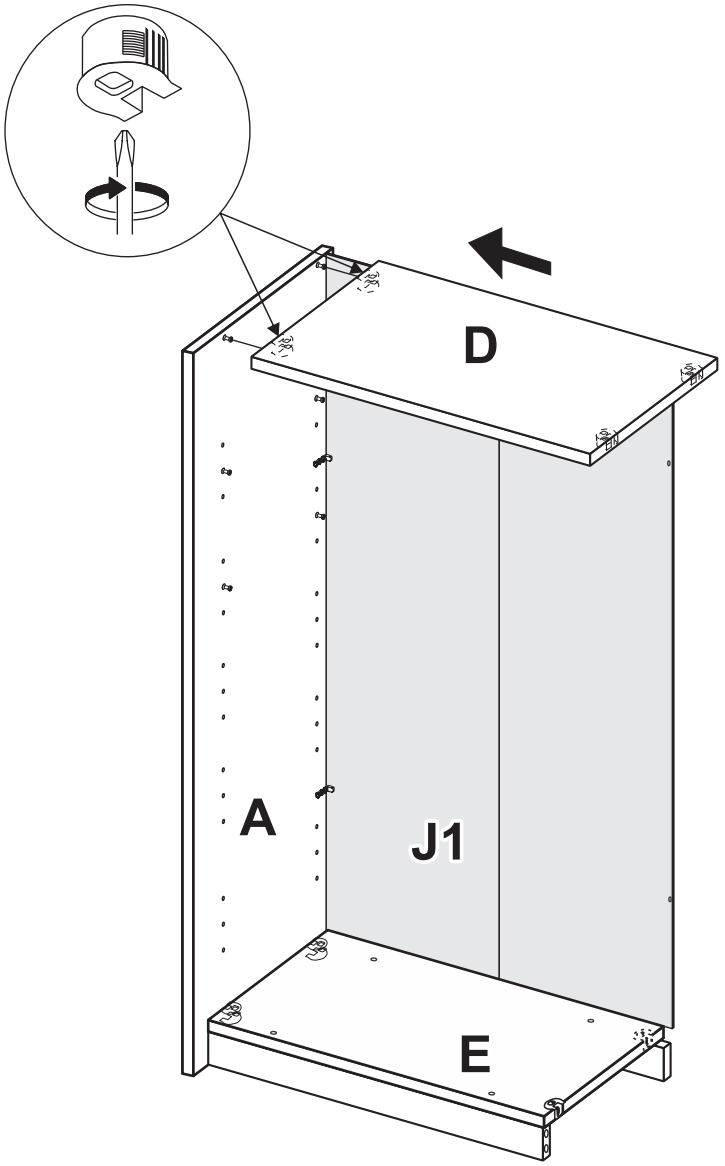




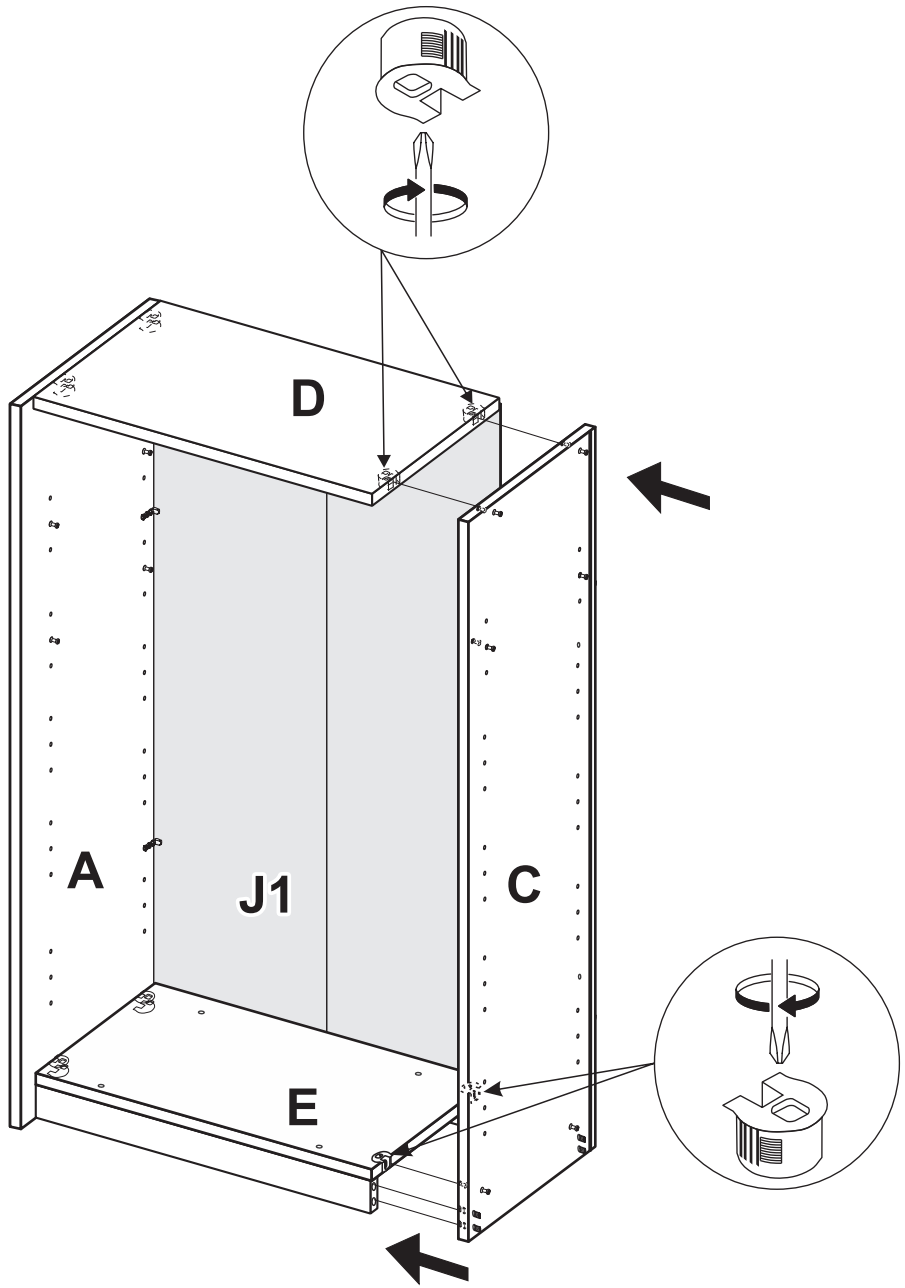


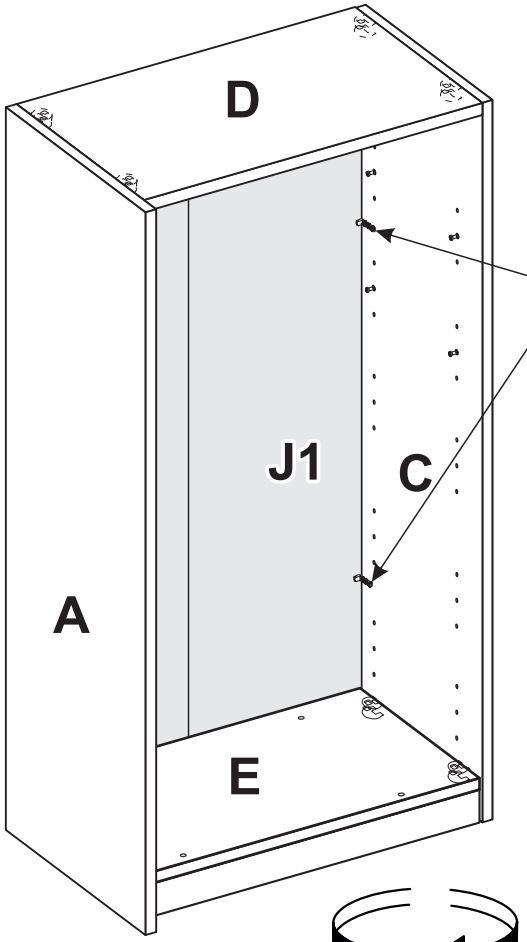
1 	x16	80881
3 	Ø 8x50 x4	21850
5 	x2	14011

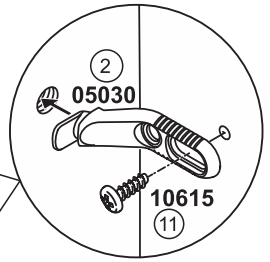


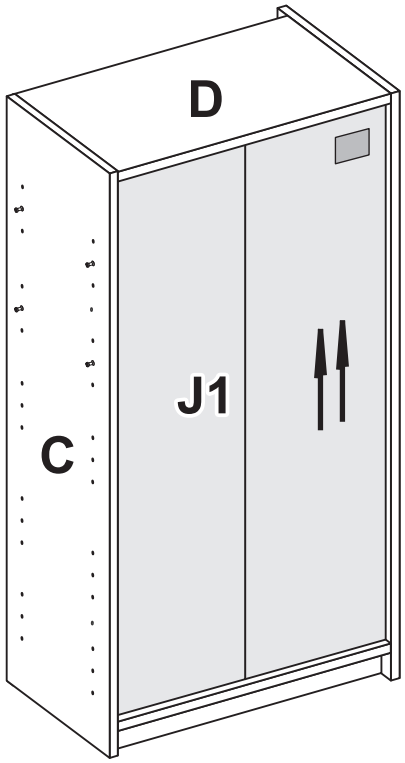


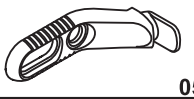
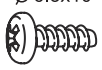
2	x2	11	Ø 6.3x10 x2
05030		10615	

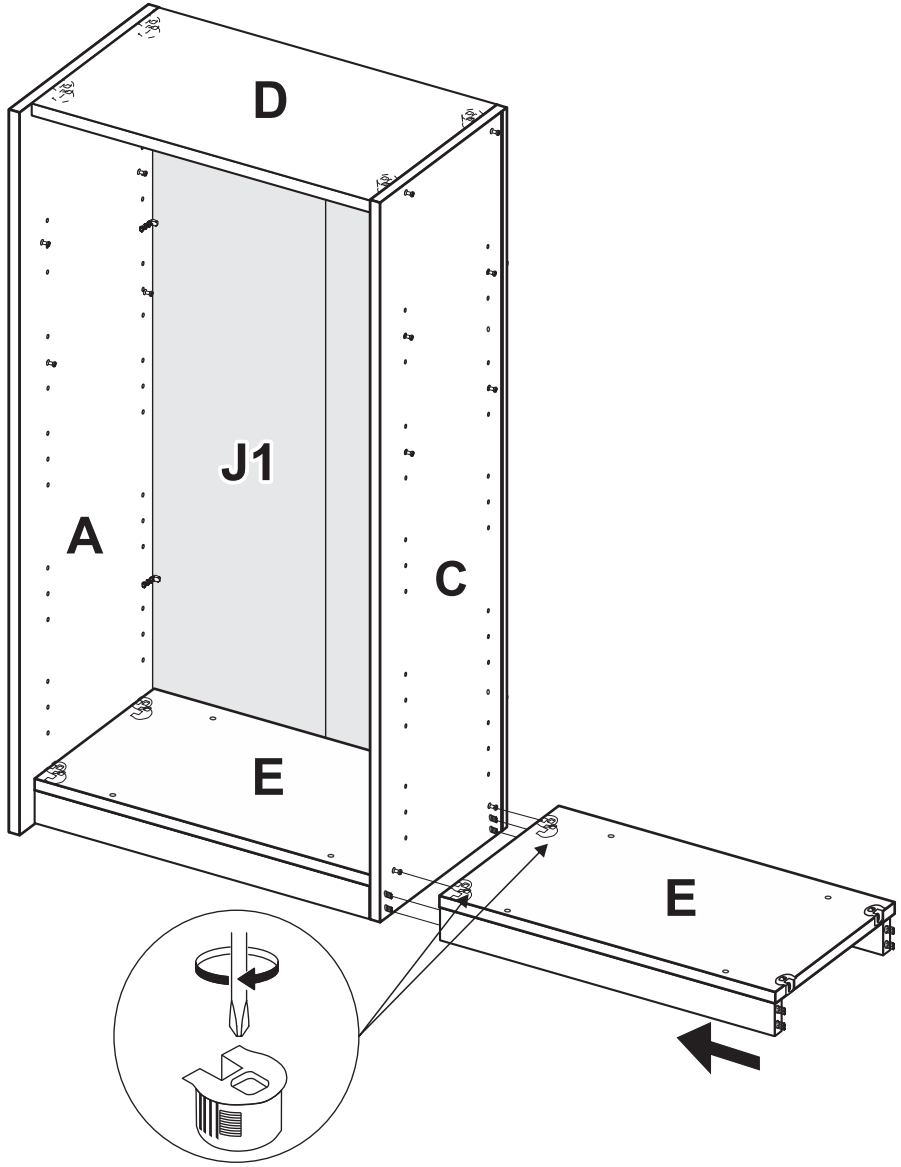


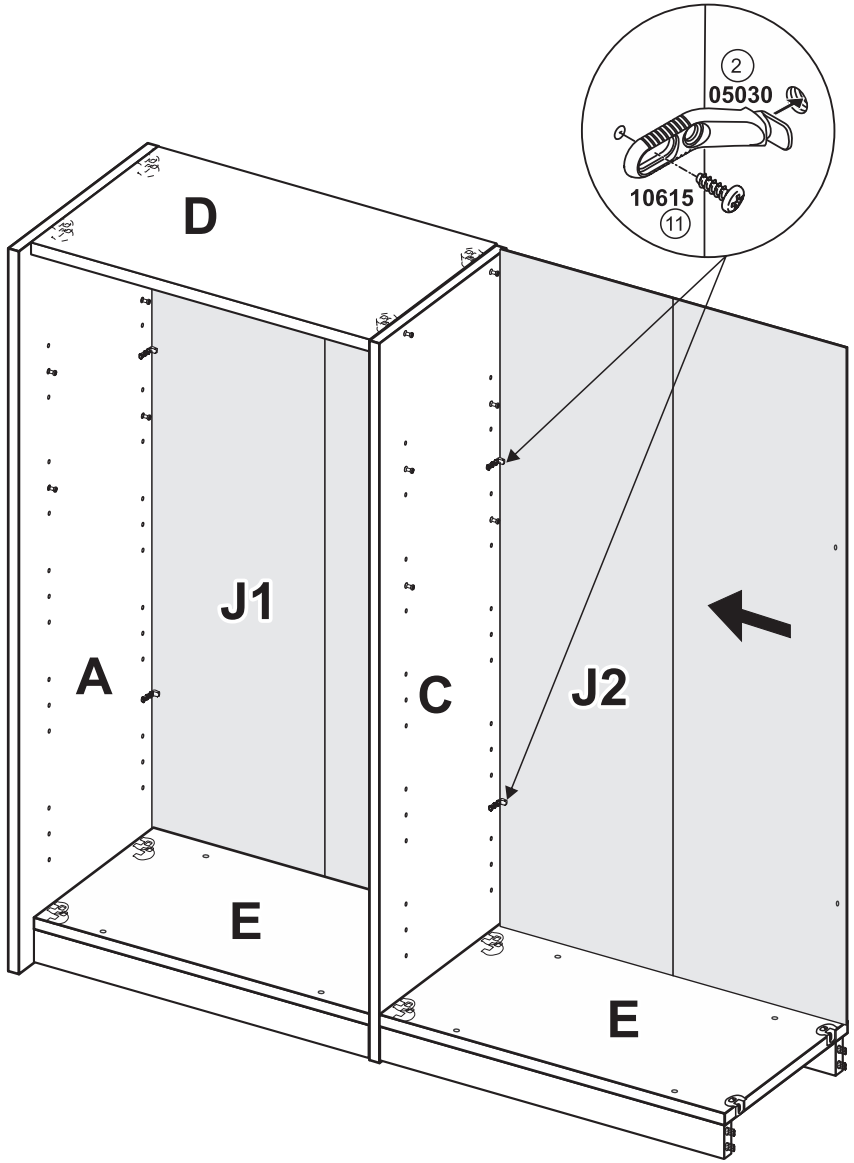




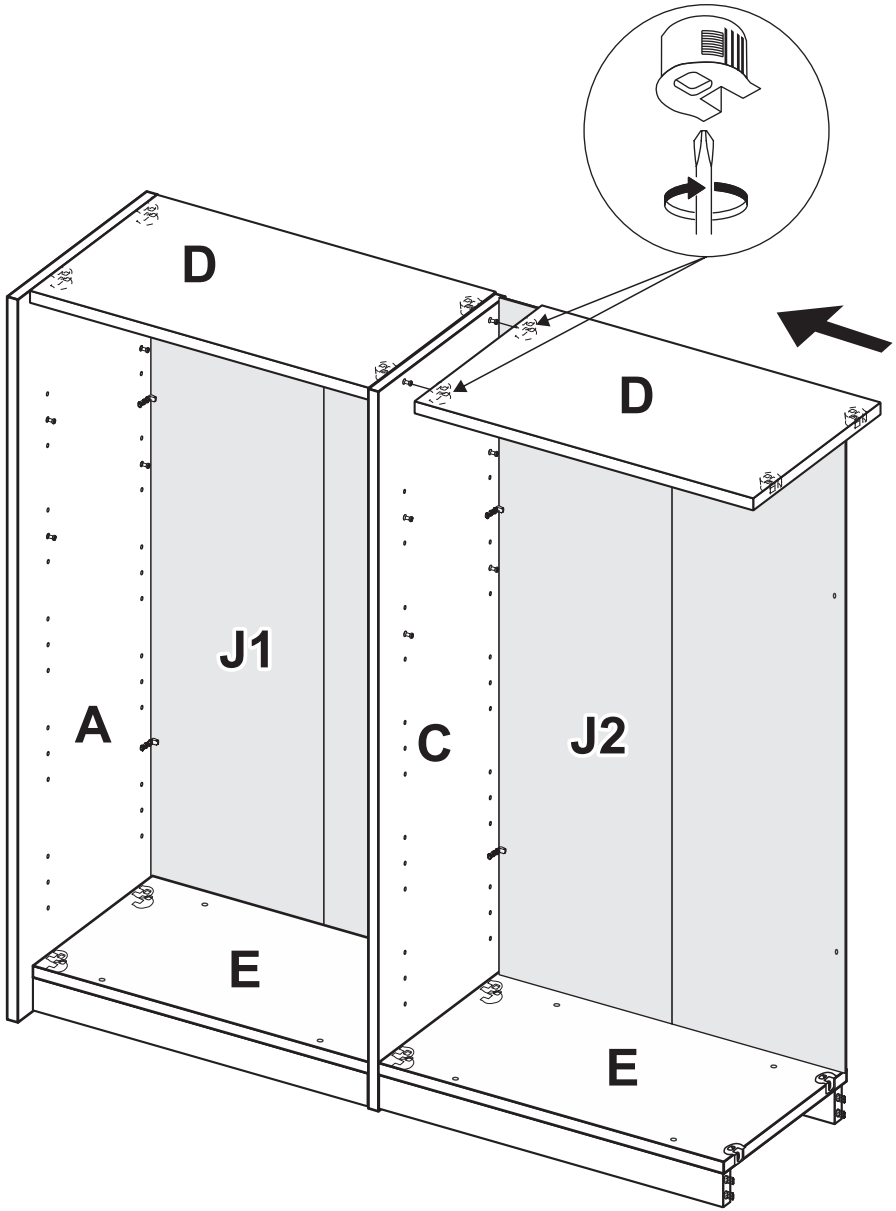


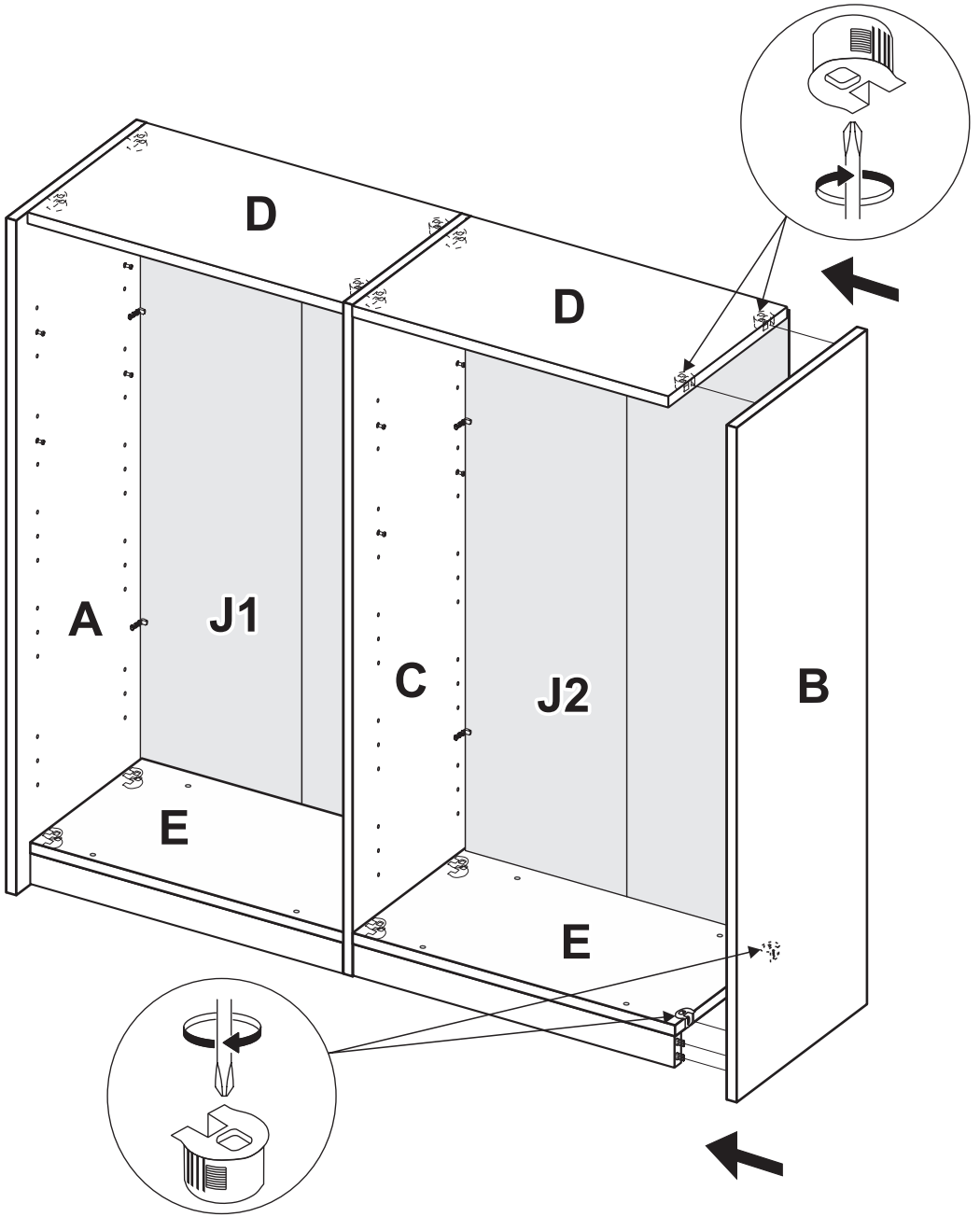
2		x2	11	Ø 6.3x10 	x2
	05030			10615	

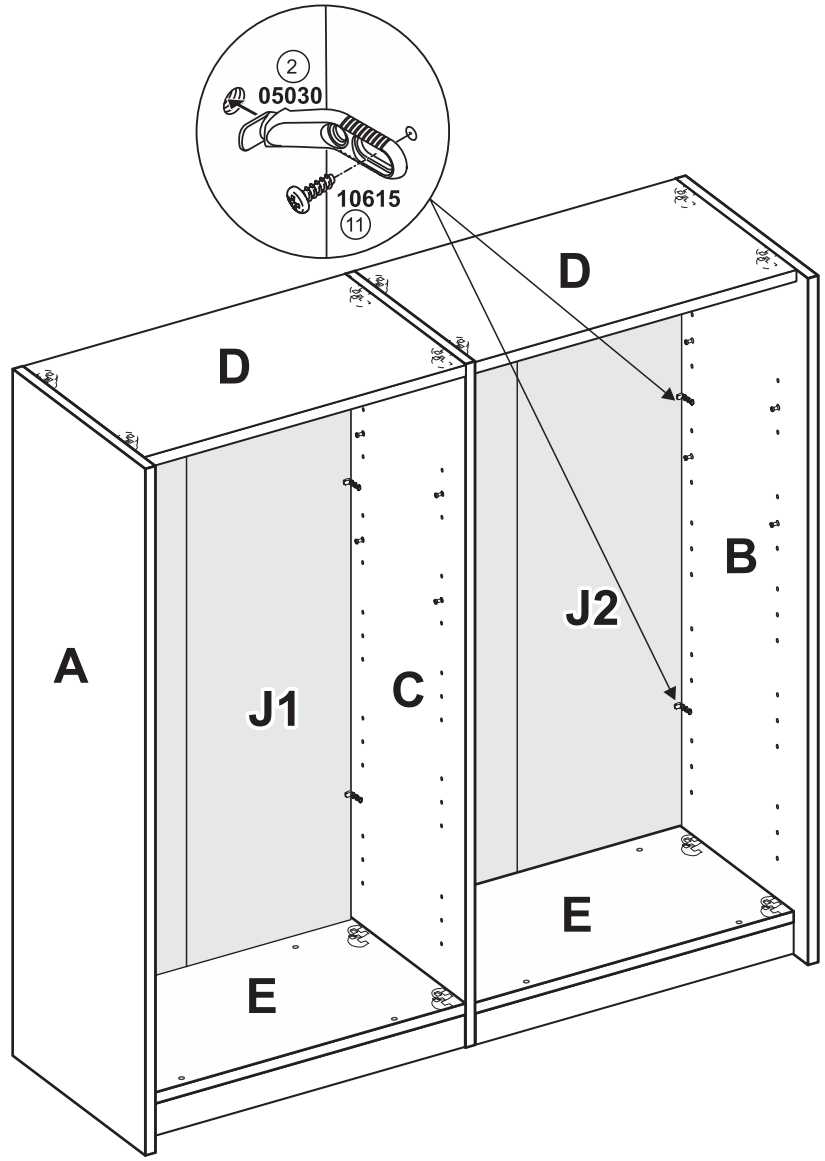


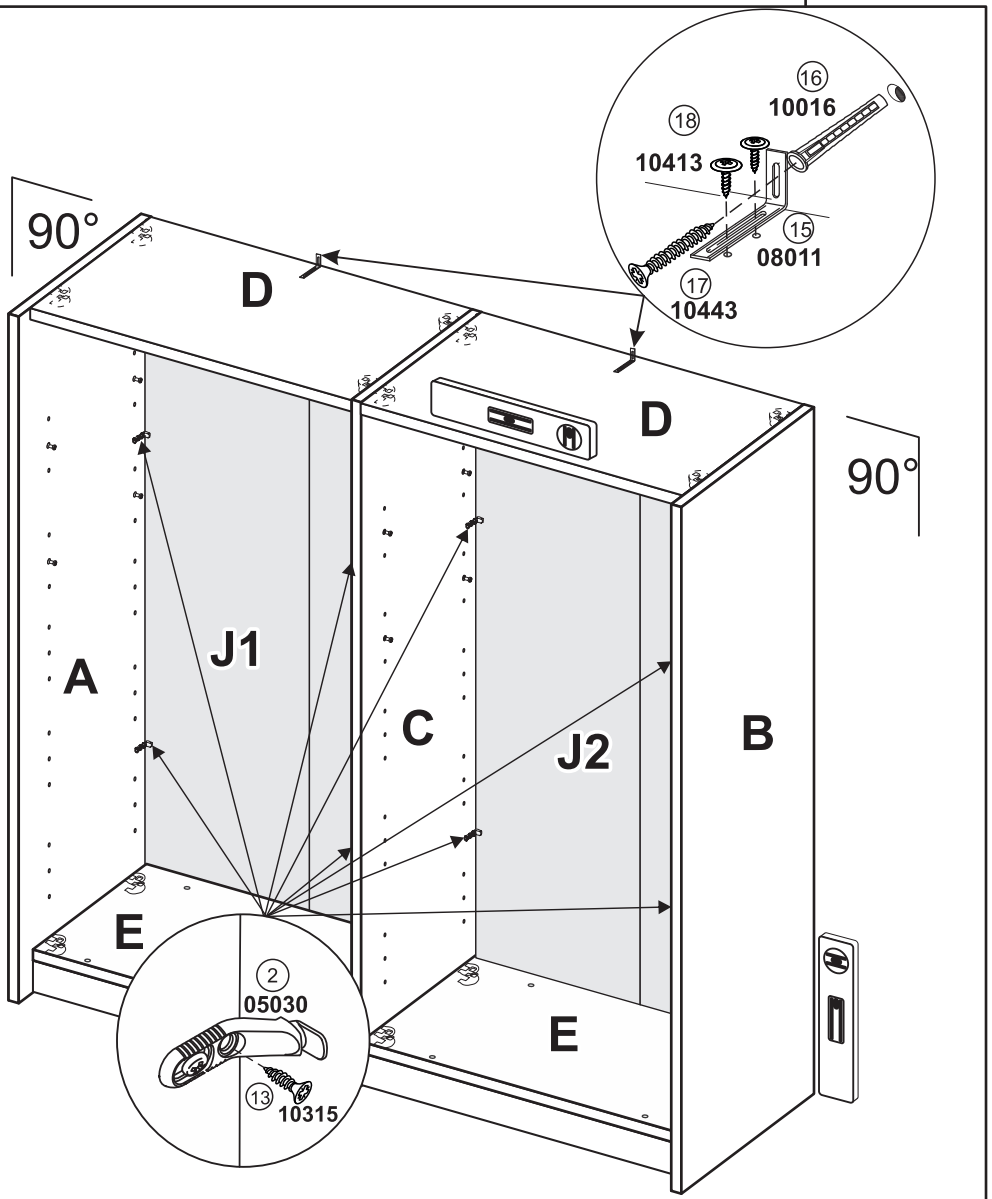


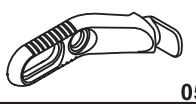
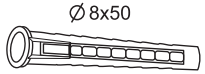
2		x2	05030
11		Ø 6.3x10	x2 10615

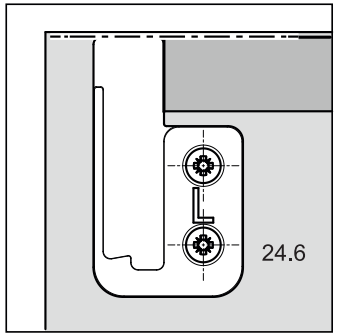

D
D
J1
A
C
J2
E
E

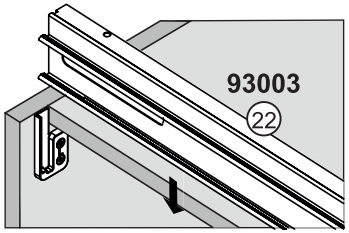

D
D
A
J1
C
J2
B
E
E

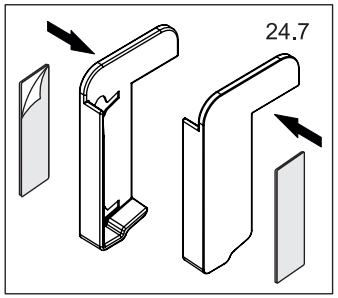


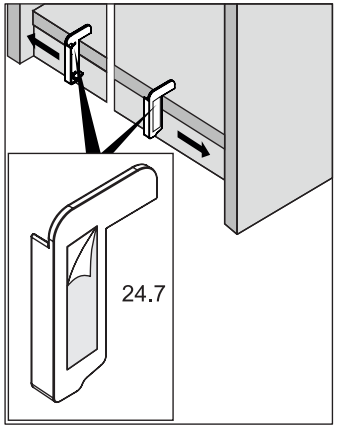


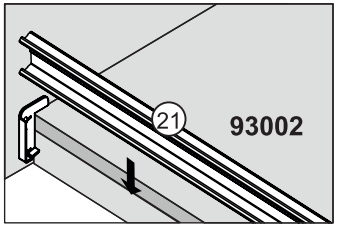
2  x2 05030	11 Ø 6.3x10  x2 10615	15  x2 08011	16 Ø 8x50  x2 10016
	17 Ø 5x60  x2 10443	18 Ø 4.2x13  x4 10413	13 Ø 3.5x15  x8 10315

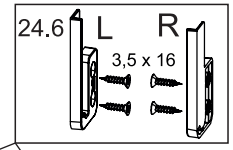

24.6
L

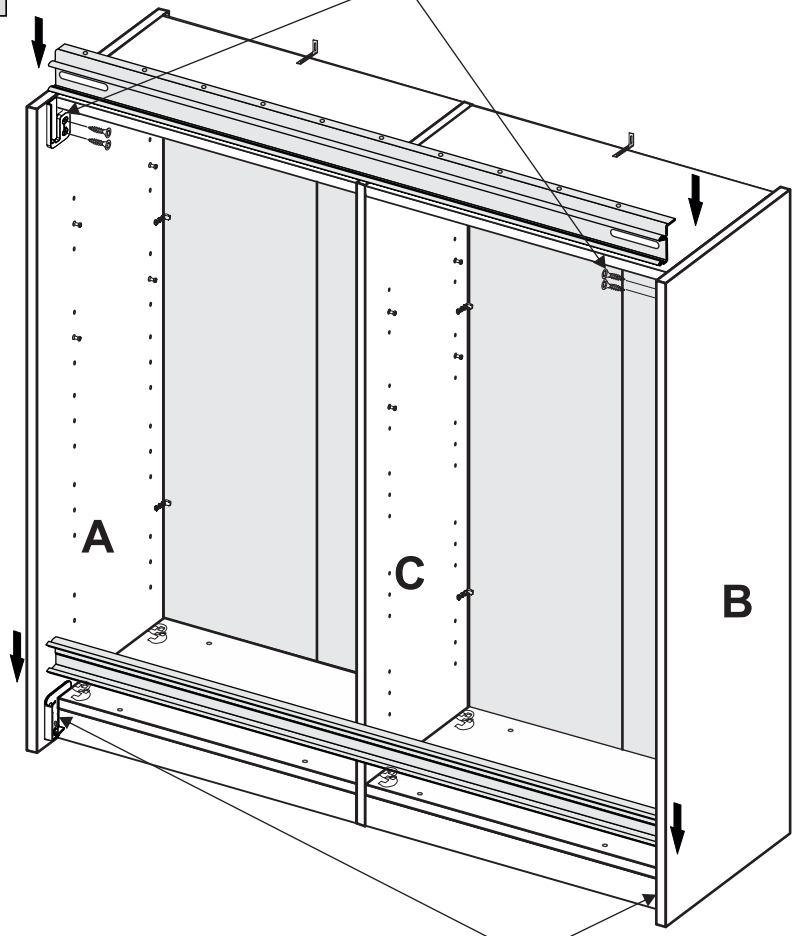

93003
22

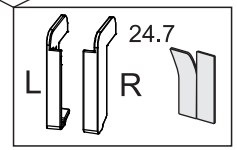

24.7

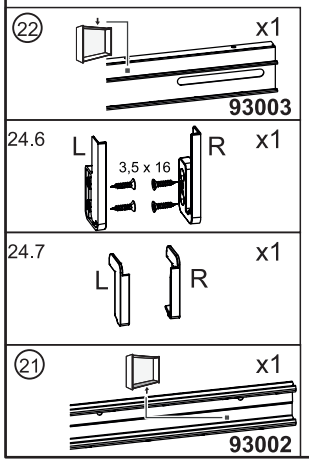

24.7

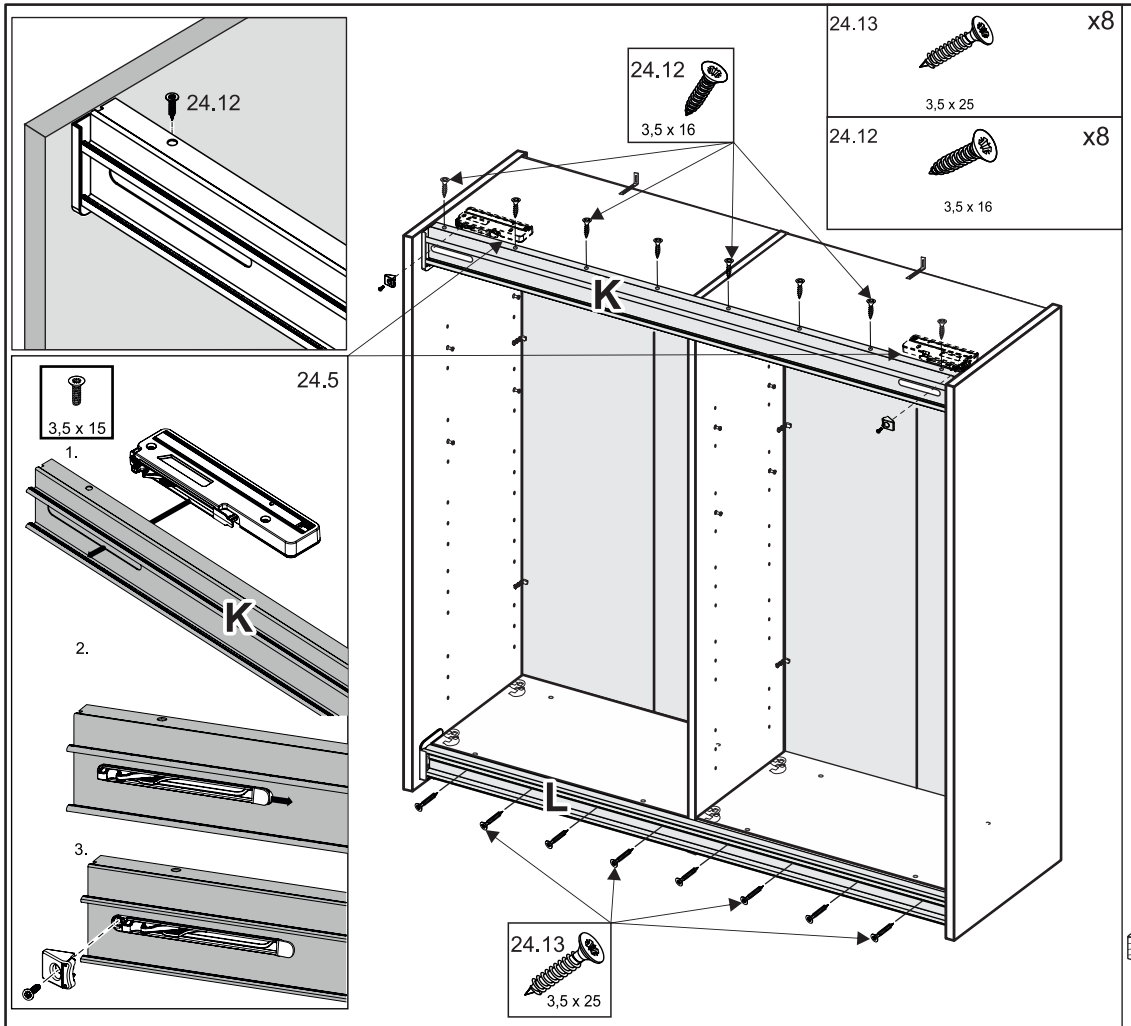

21
93002

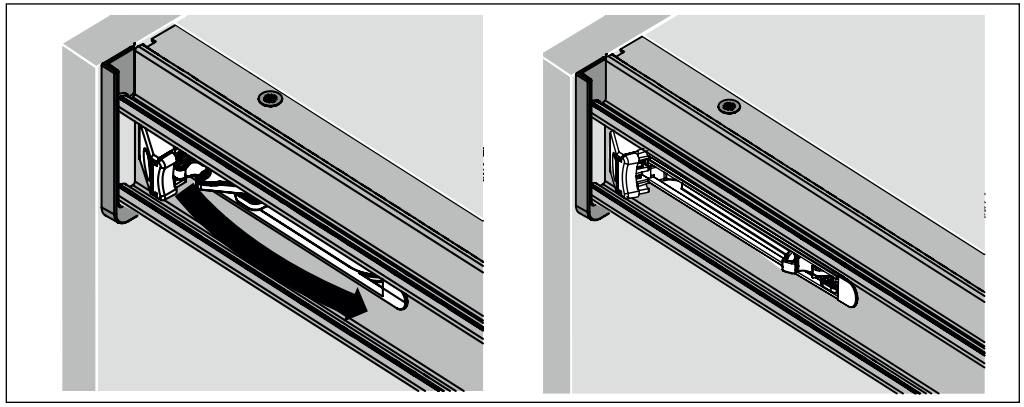

24.6
L
R
3,5 x 16

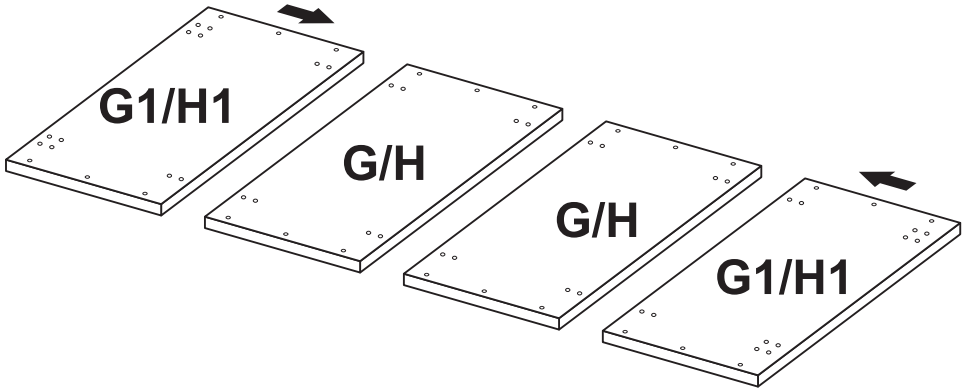

A
C
B

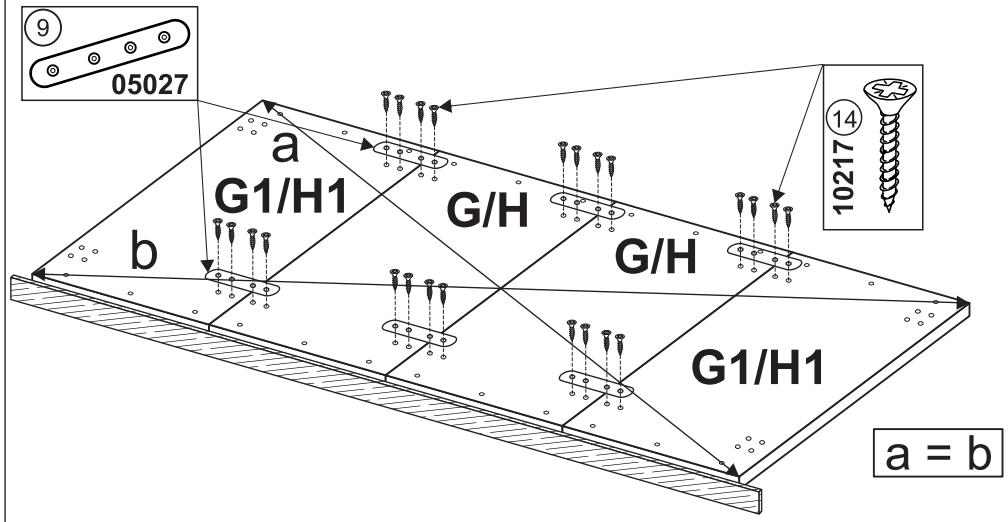

24.7
L
R

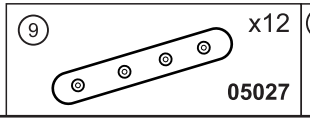

22
x1
93003
24.6
L
R
3,5 x 16
x1
24.7
L
R
x1
21
x1
93002

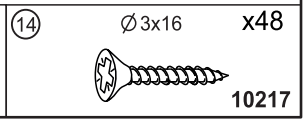

24.12
24.12
3,5 x 16
24.13 x8
3,5 x 25
24.12 x8
3,5 x 16
K
24.5
3,5 x 15
1.
K
2.
3.
L
24.13
3,5 x 25

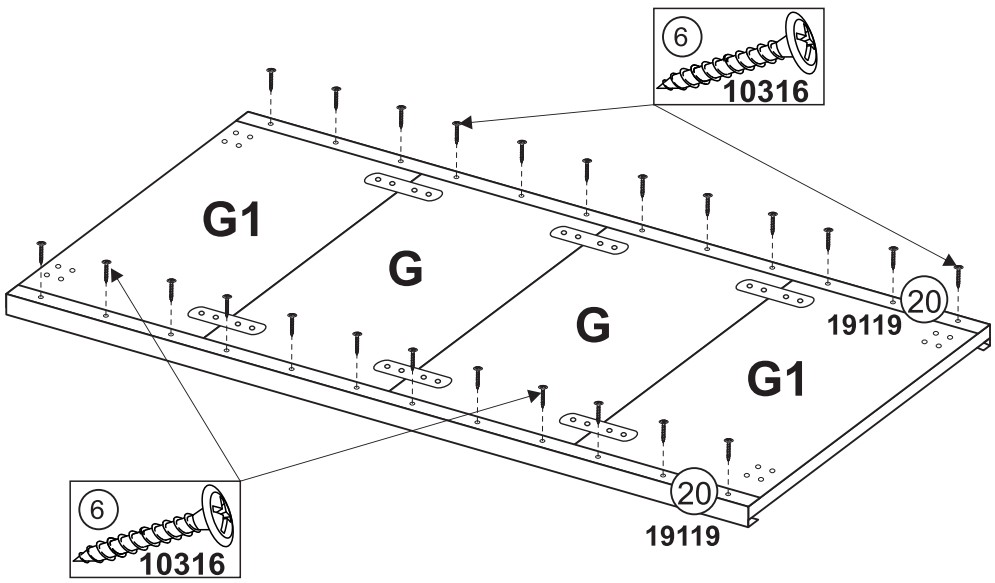


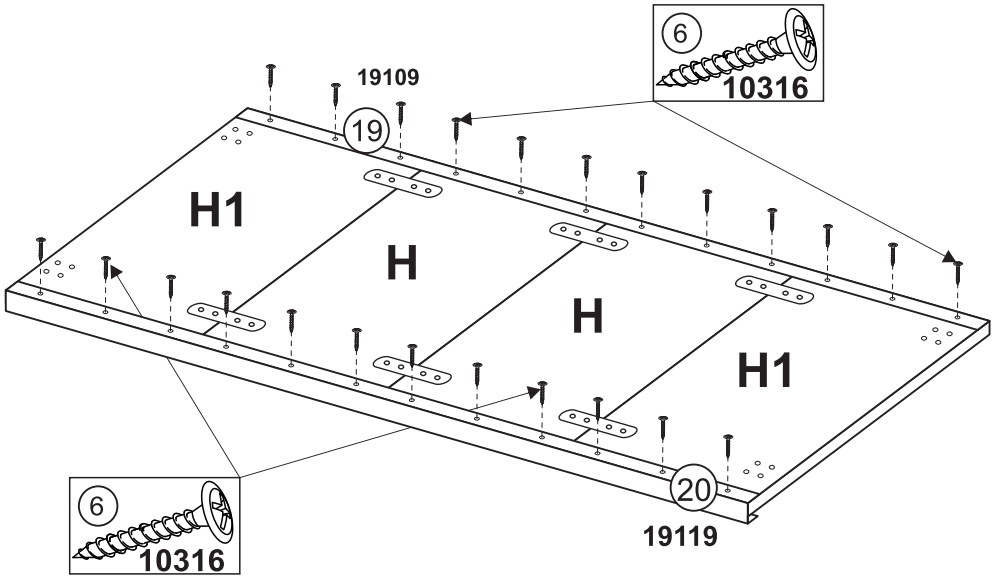

G1/H1
G/H
G/H
G1/H1

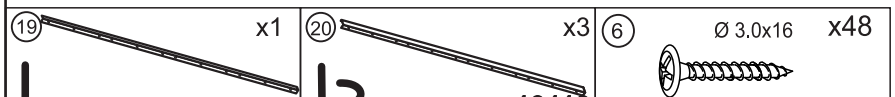

9
05027
a
G1/H1
b
G/H
G/H
G1/H1
14
10217
a = b

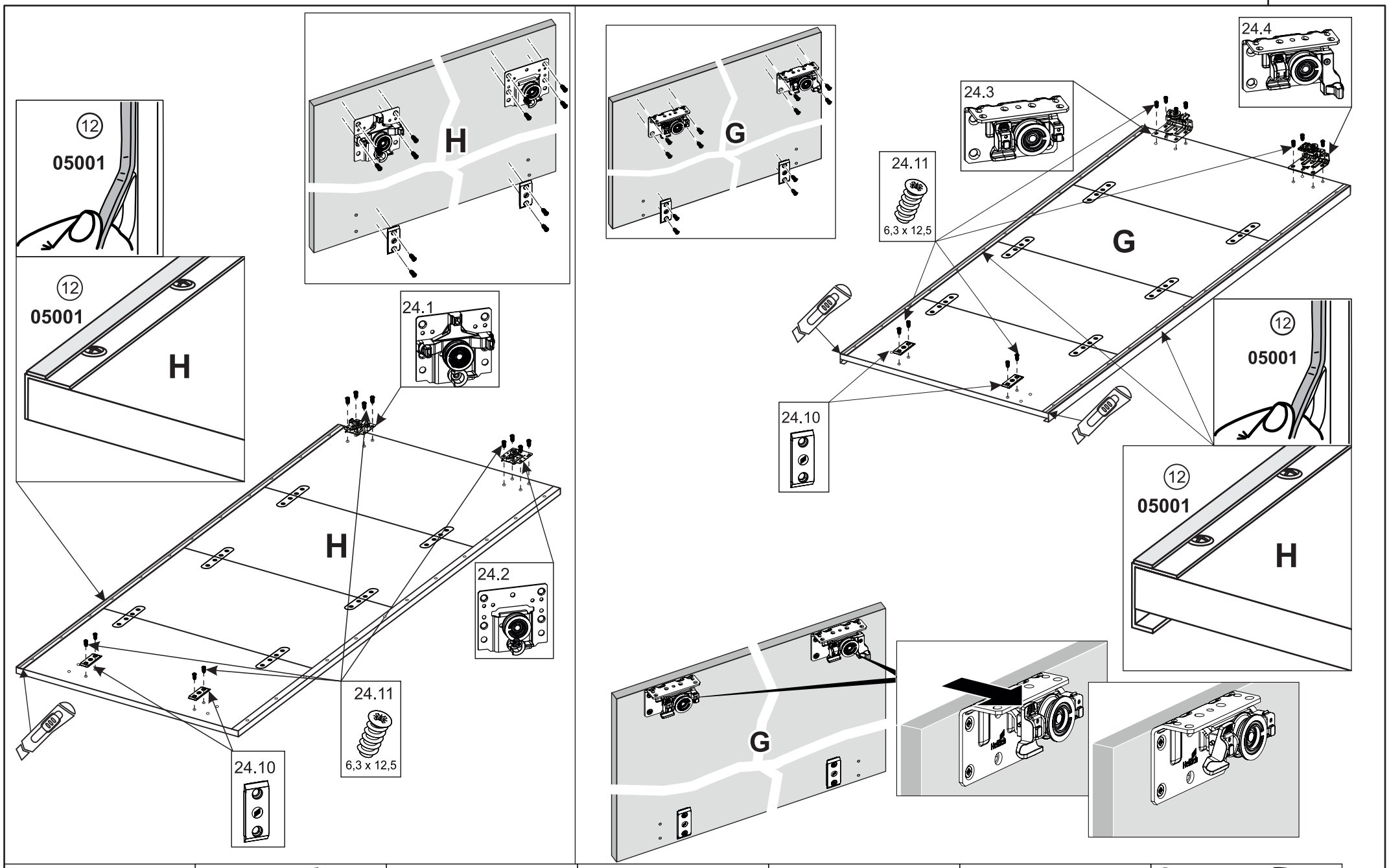

9
x12
05027


14
Ø3x16
x48
10217

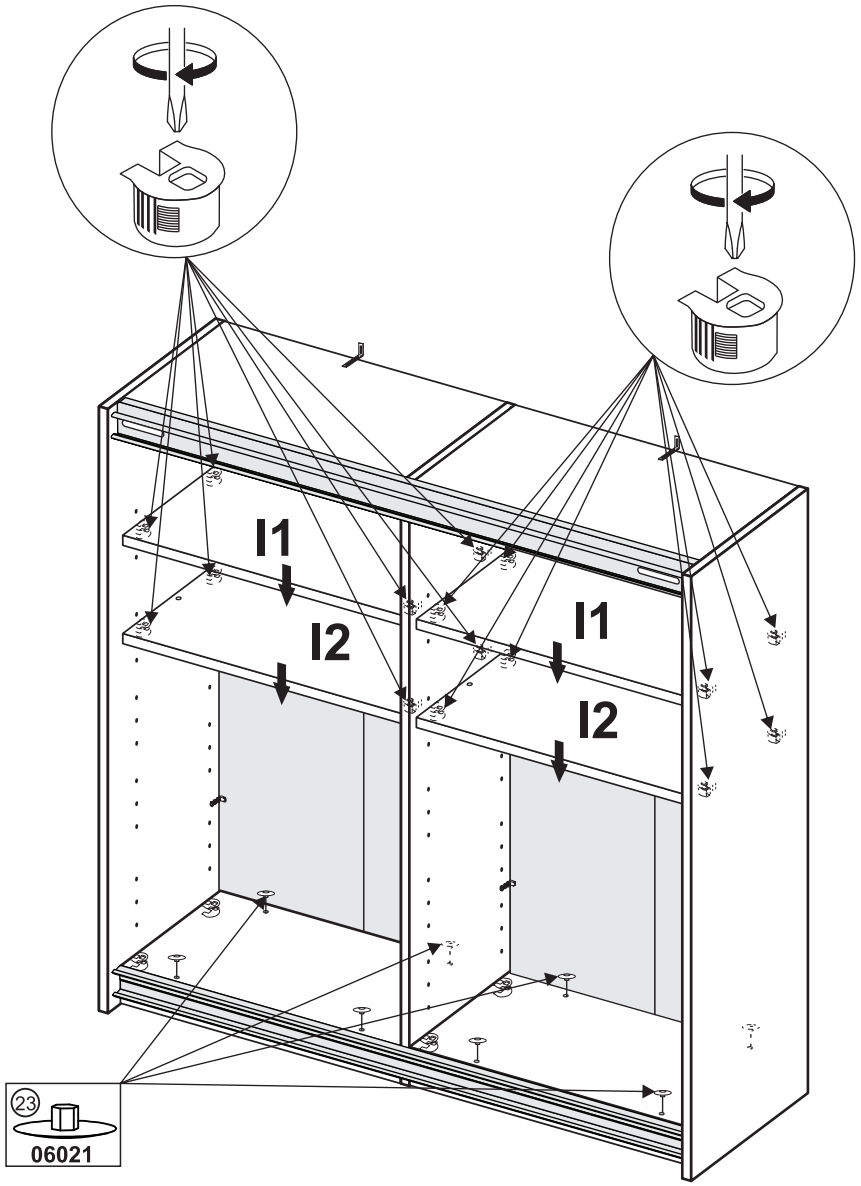

6
10316
G1
G
G
G1
20
19119
6
10316
20
19119

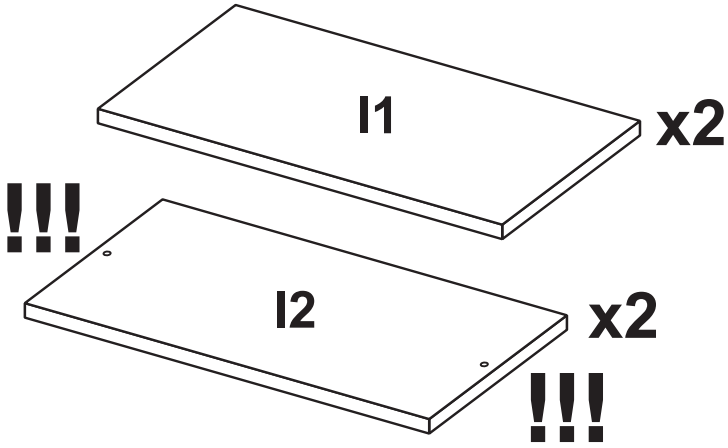

6
10316
19109
19
H1
H
H
H1
6
10316
20
19119

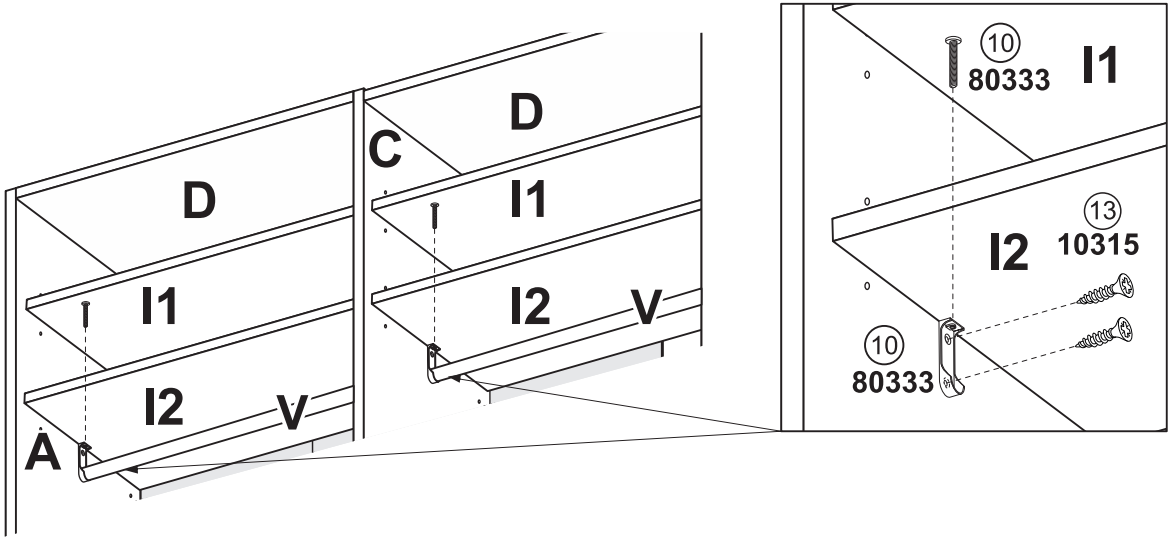

19
x1
19109
20
x3
19119
6
Ø 3.0x16
x48
10316



24.1		x1	24.2		x1	24.10		x4	24.4	x1	24.3	x1	24.11	x24	12	x1
													6,3 x 12,5		05001	







23 x8

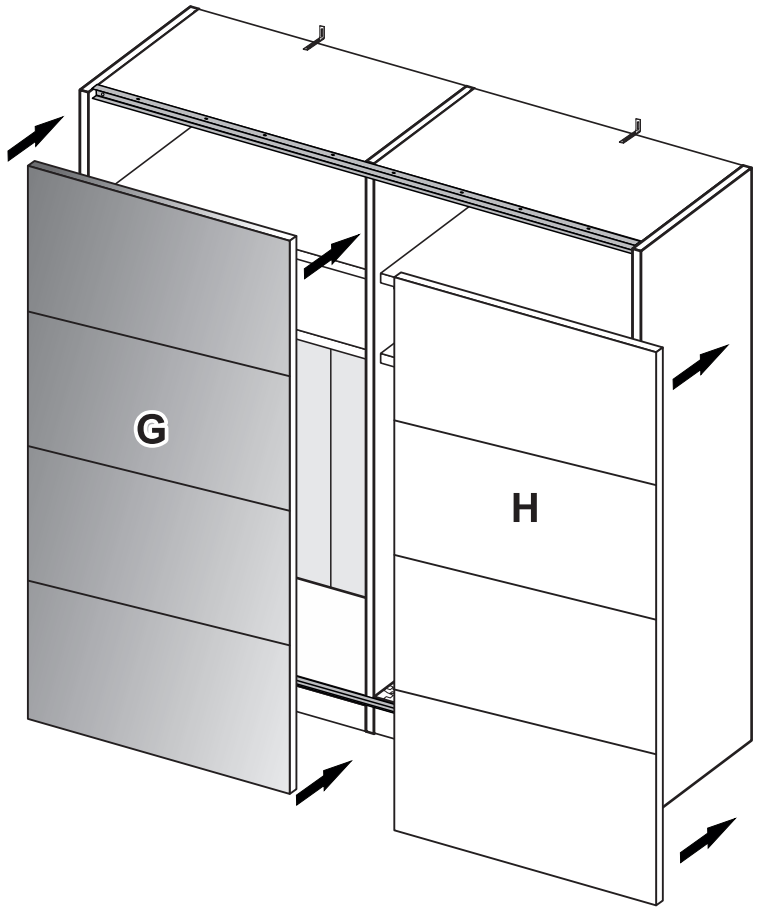


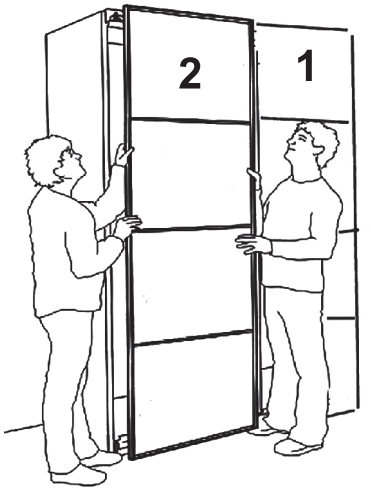
06021

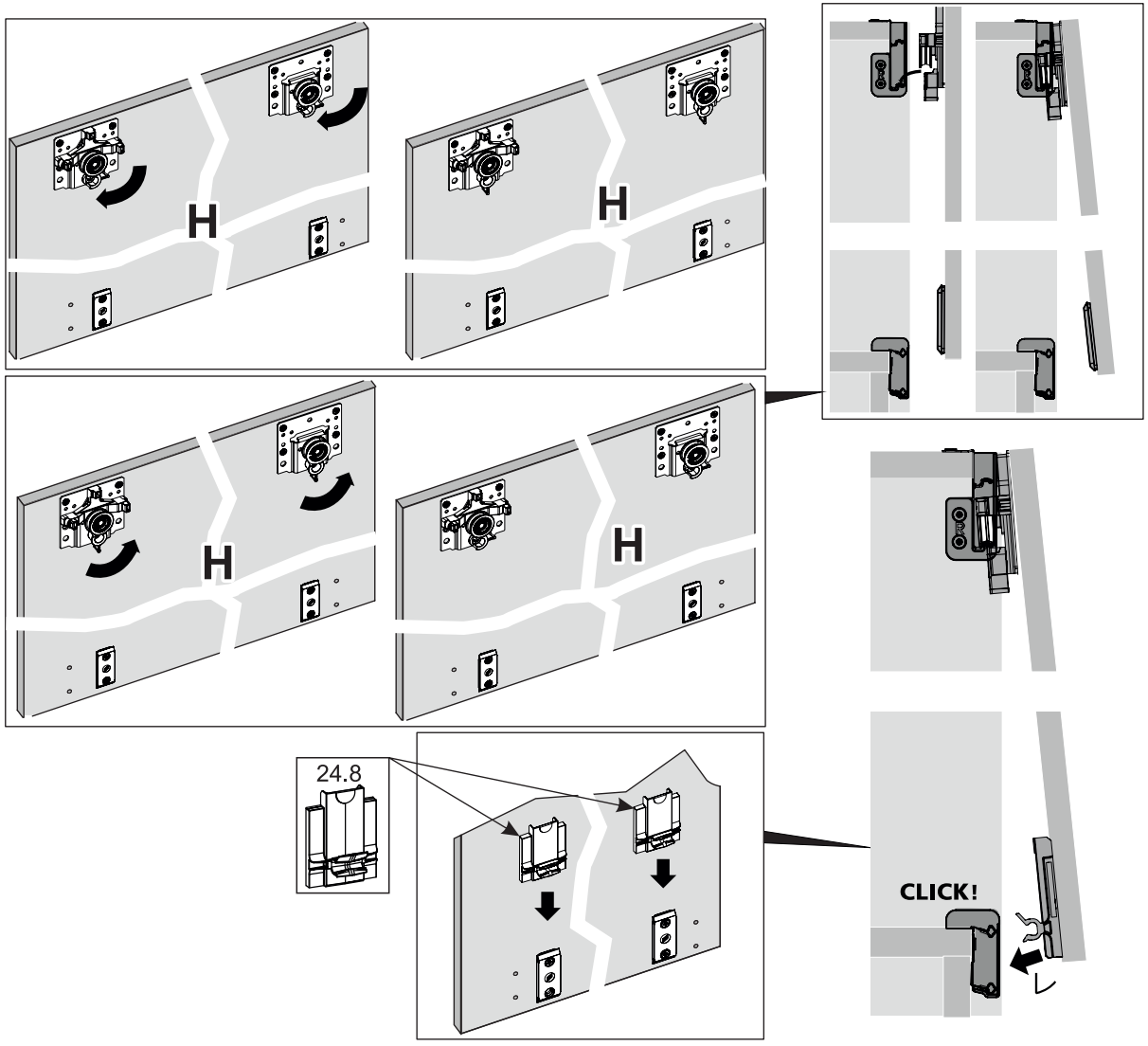
13 Ø 3.5x15 x8

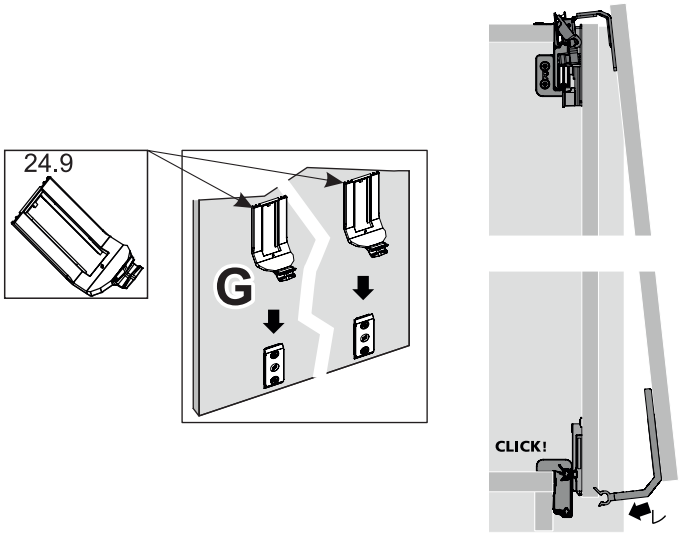


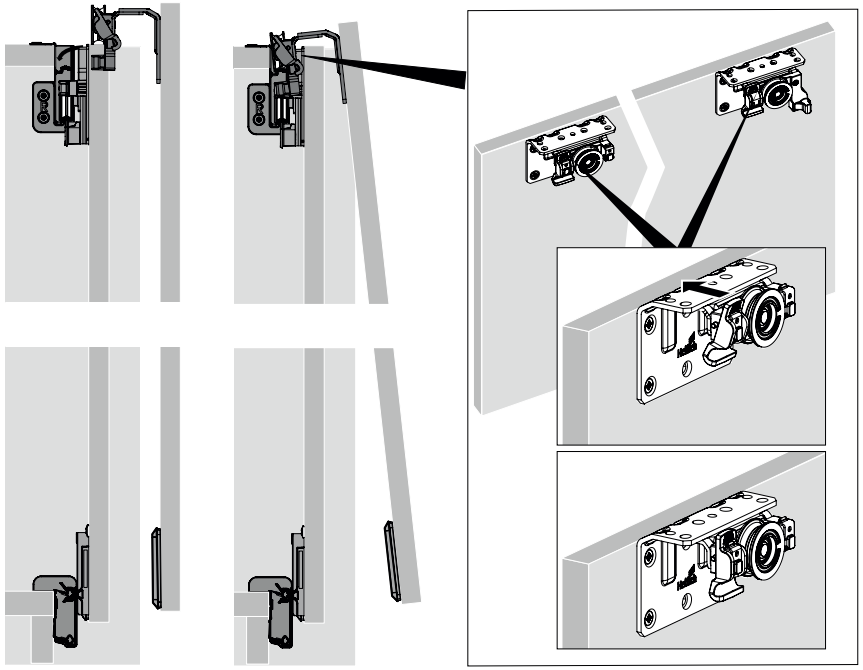
10315


G
H

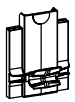

2
1







24.8 x2



24.9 x2

