EASY TYP 201/202

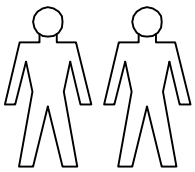

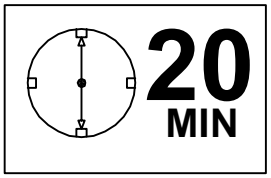

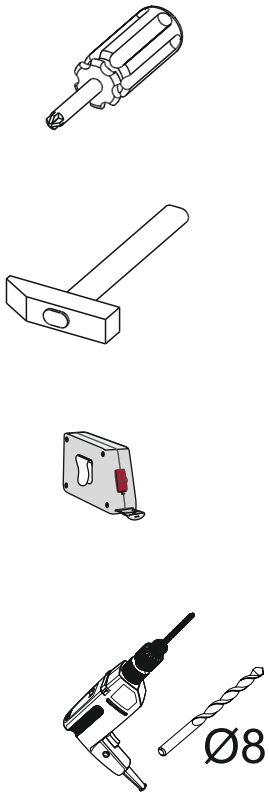

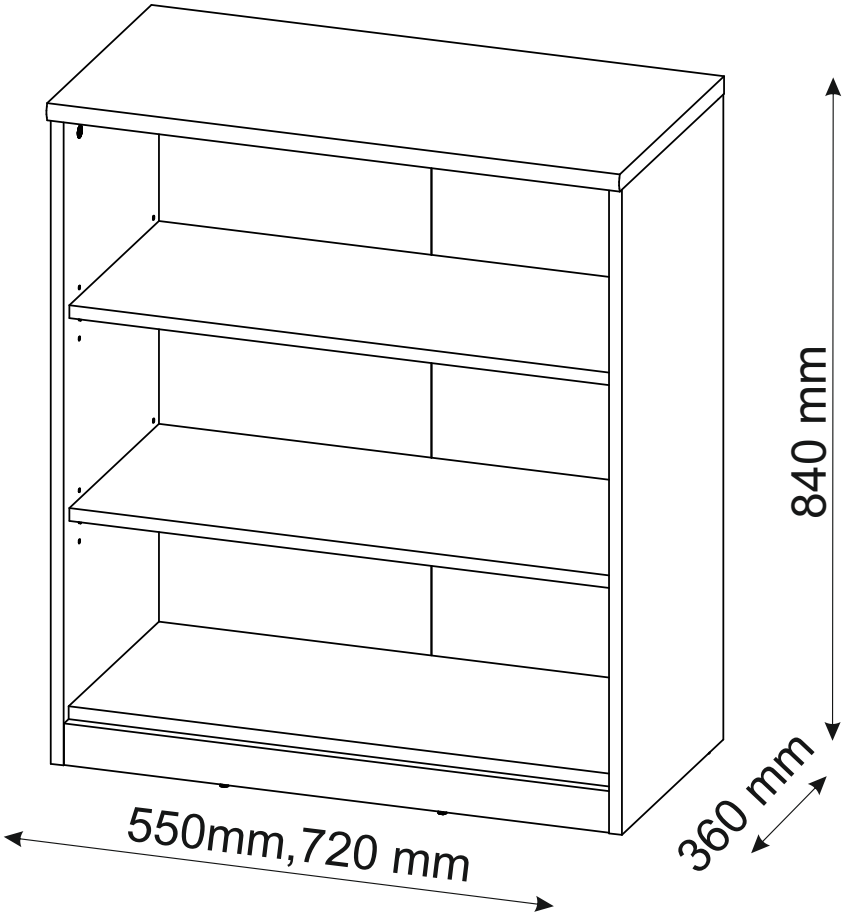

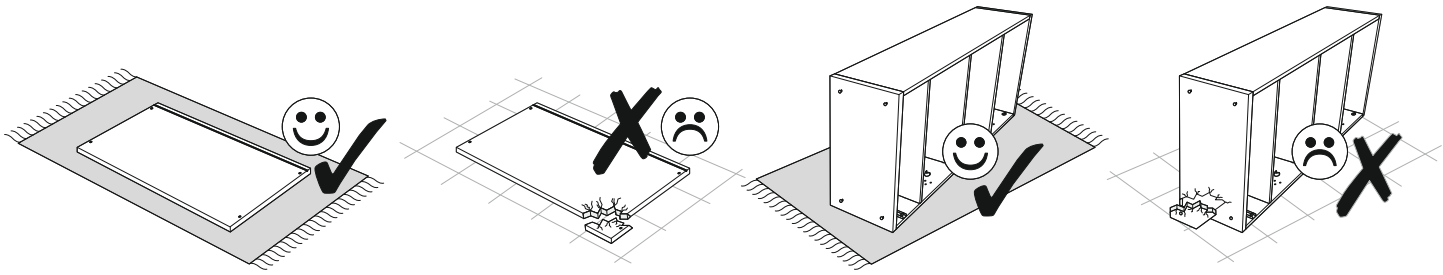

EASY TYP 201/202

A0 8 x 30mm	C0	C2
C7 16mm	D0 3 x 15 mm	D5 3,5 x 16 mm
D21 5 x 13 mm	E0 5 x 50 mm 8 x 50 mm	M1
P0	P20	Q3
T3		

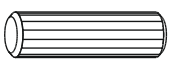

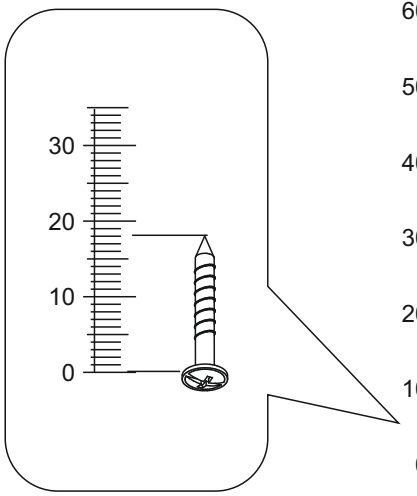

EASY TYP 201/202

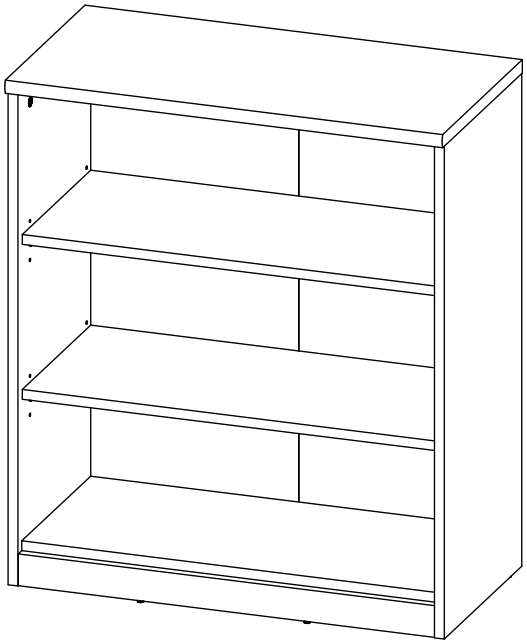

TYP 201

1	812	350	16	x1	1/1
2	812	350	16	x1	1/1
3	516	52	16	x1	1/1
4	516	332	16	x1	1/1
5	516	310	16	x2	1/1
6	550	360	22	x1	1/1
7	760	526	2,8	x1	1/1
					1/1

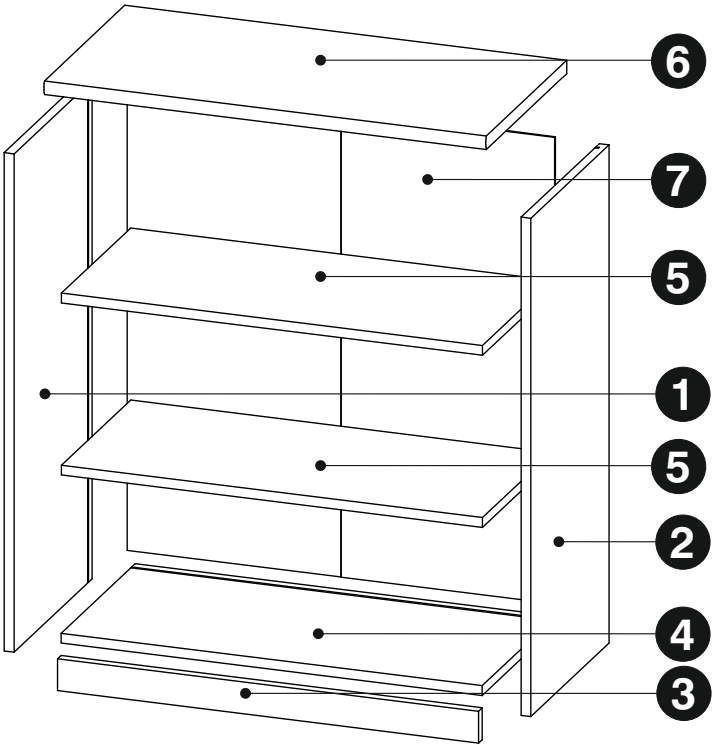

TYP 202

1	812	350	16	x1	1/1
2	812	350	16	x1	1/1
3	686	52	16	x1	1/1
4	686	332	16	x1	1/1
5	686	310	16	x2	1/1
6	720	360	22	x1	1/1
7	760	696	2,8	x1	1/1
					1/1

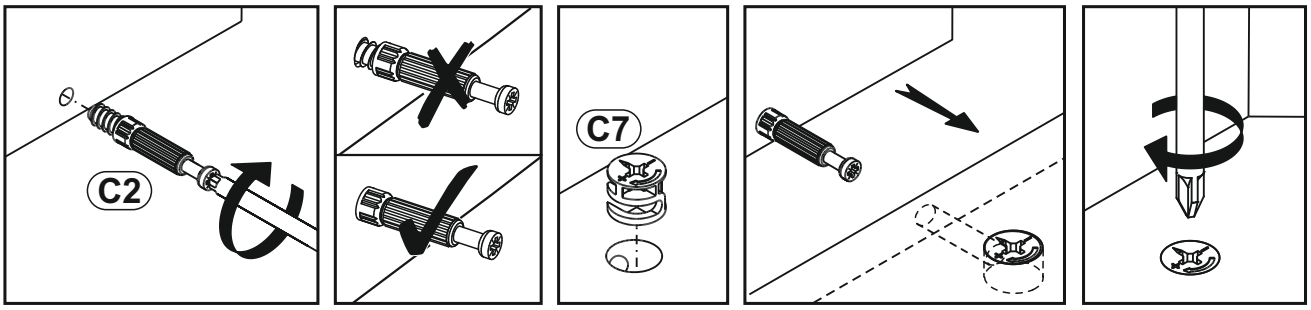

1

A0 8 x 30mm x2	C2 x2	C7 16mm x2
Q3 x4	T3 x2	

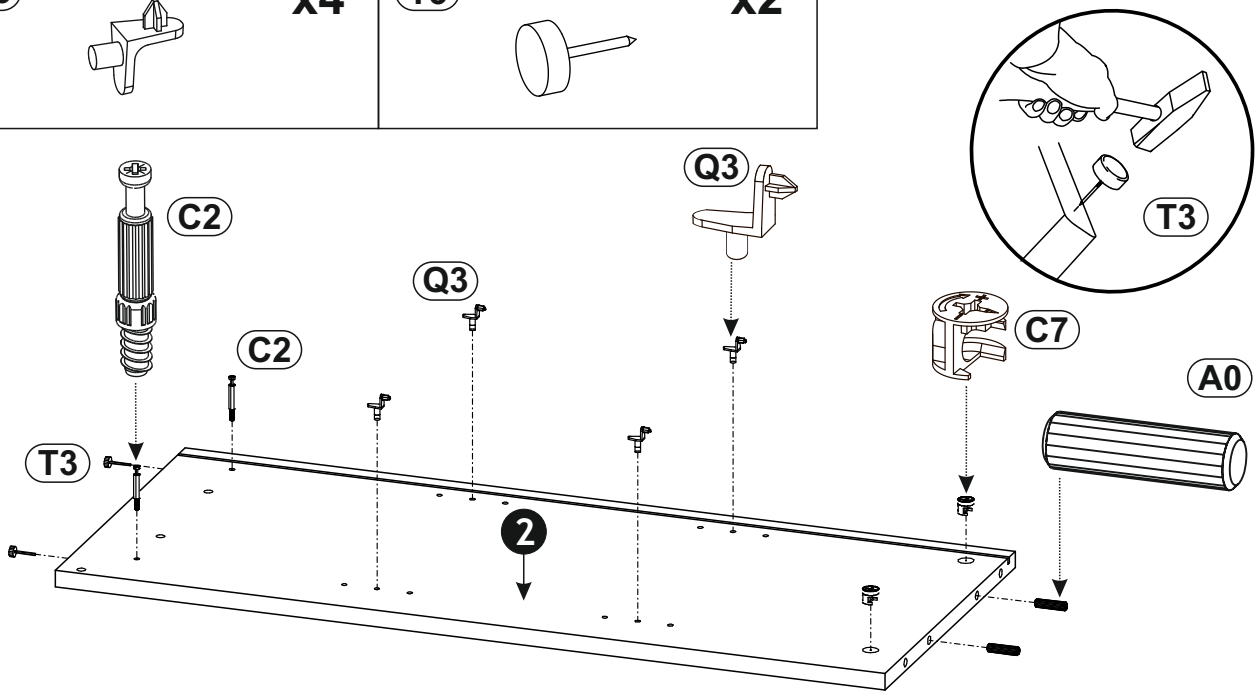

2

A0 8 x 30mm x2	C2 x2	C7 16mm x2
	Q3 x4	T3 x2

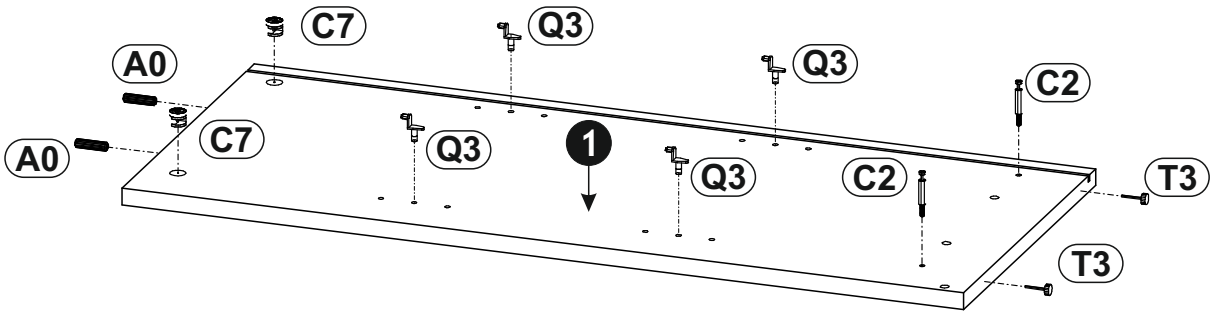

3

C2	D21	P0
x4	5 x 13 mm x1	x1

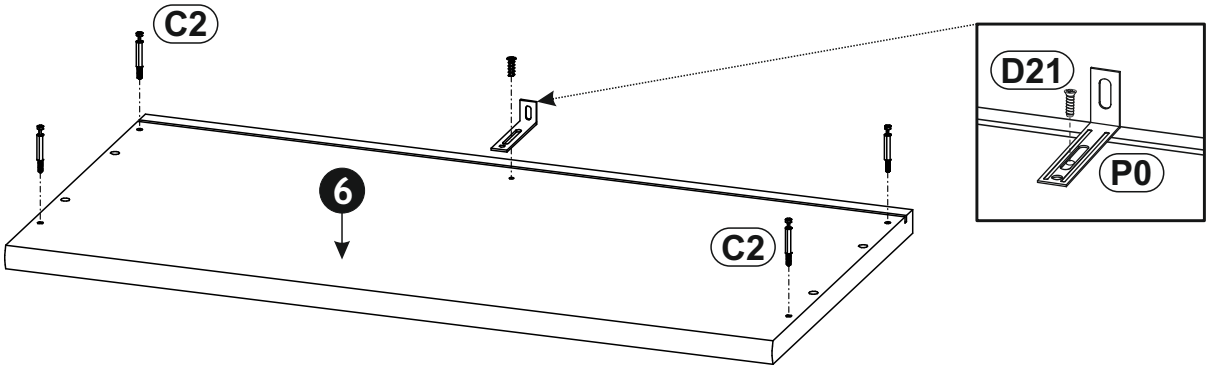

4

A0	D5	P20
8 x 30mm x2	3,5 x 16 mm x4	x4

T3
x2

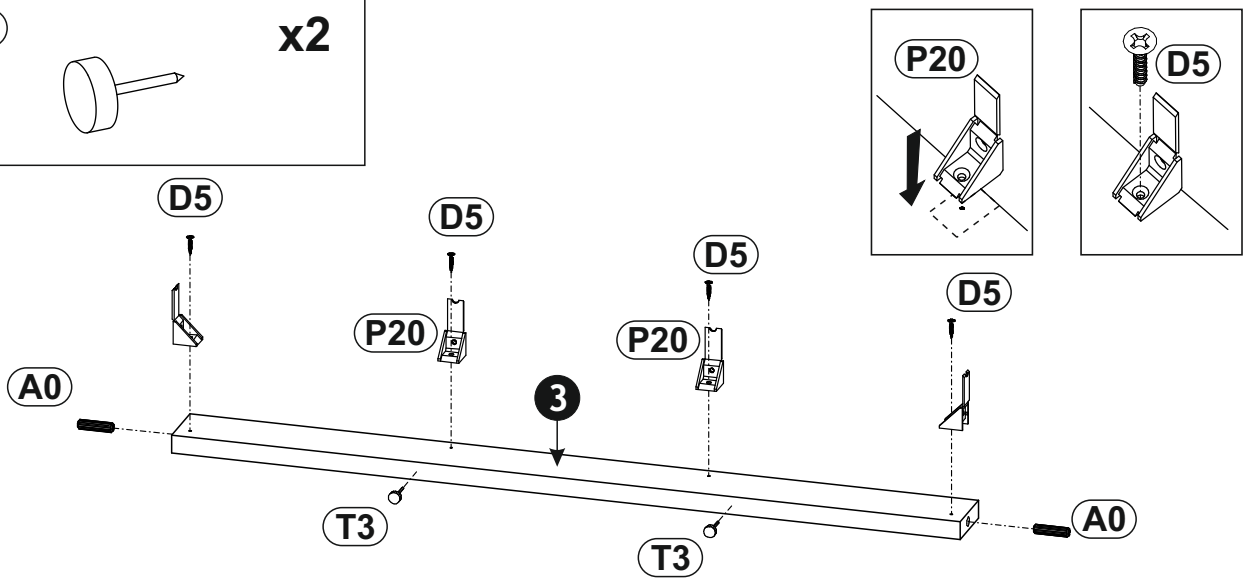

5

A0	C7
8 x 30mm x4	x4
	16mm

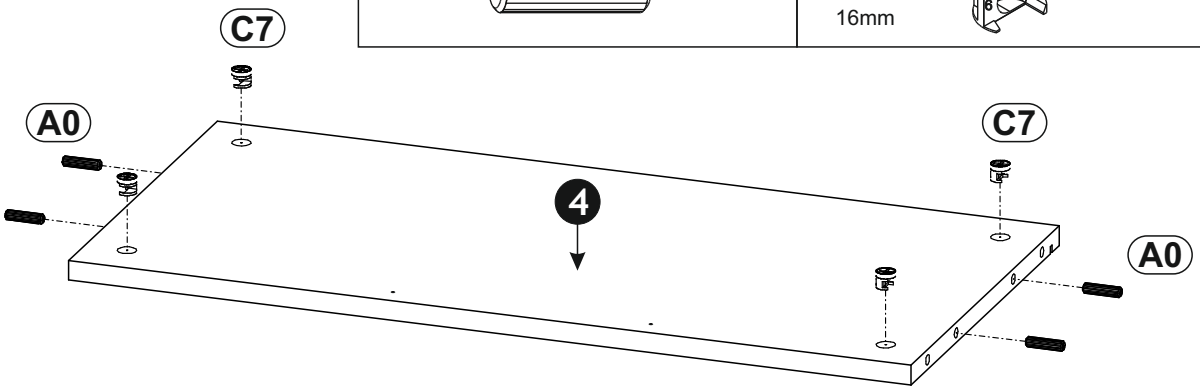

6

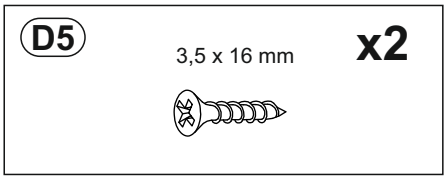

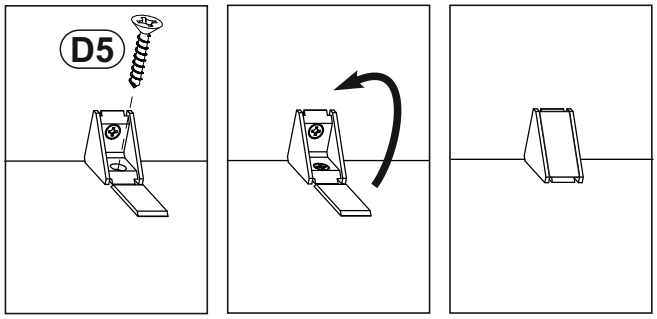

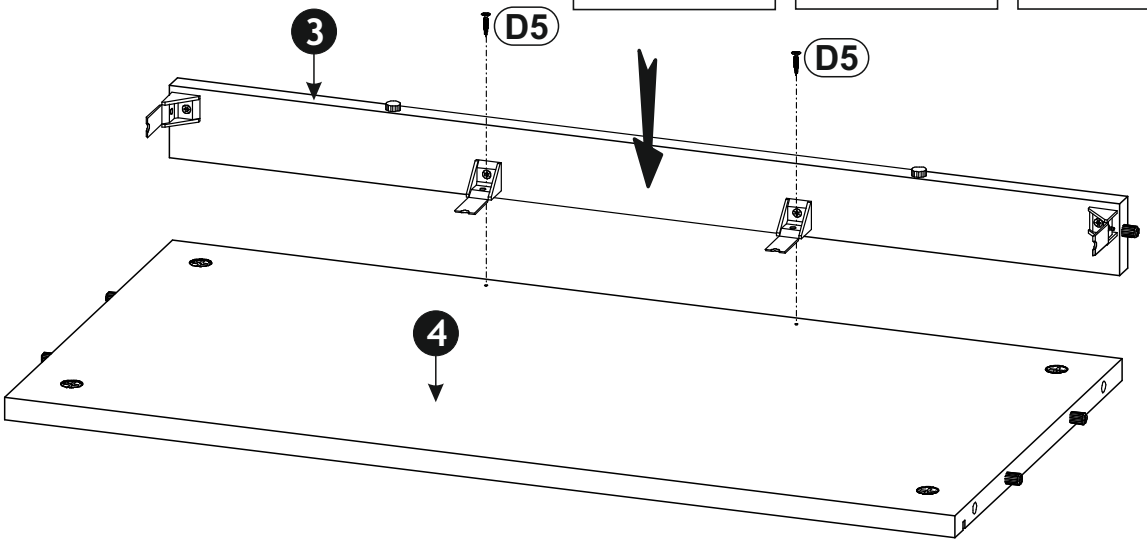

7

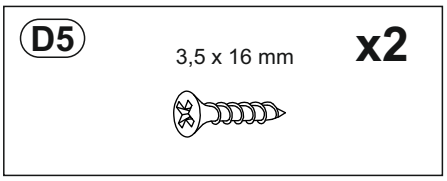

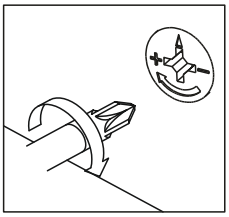

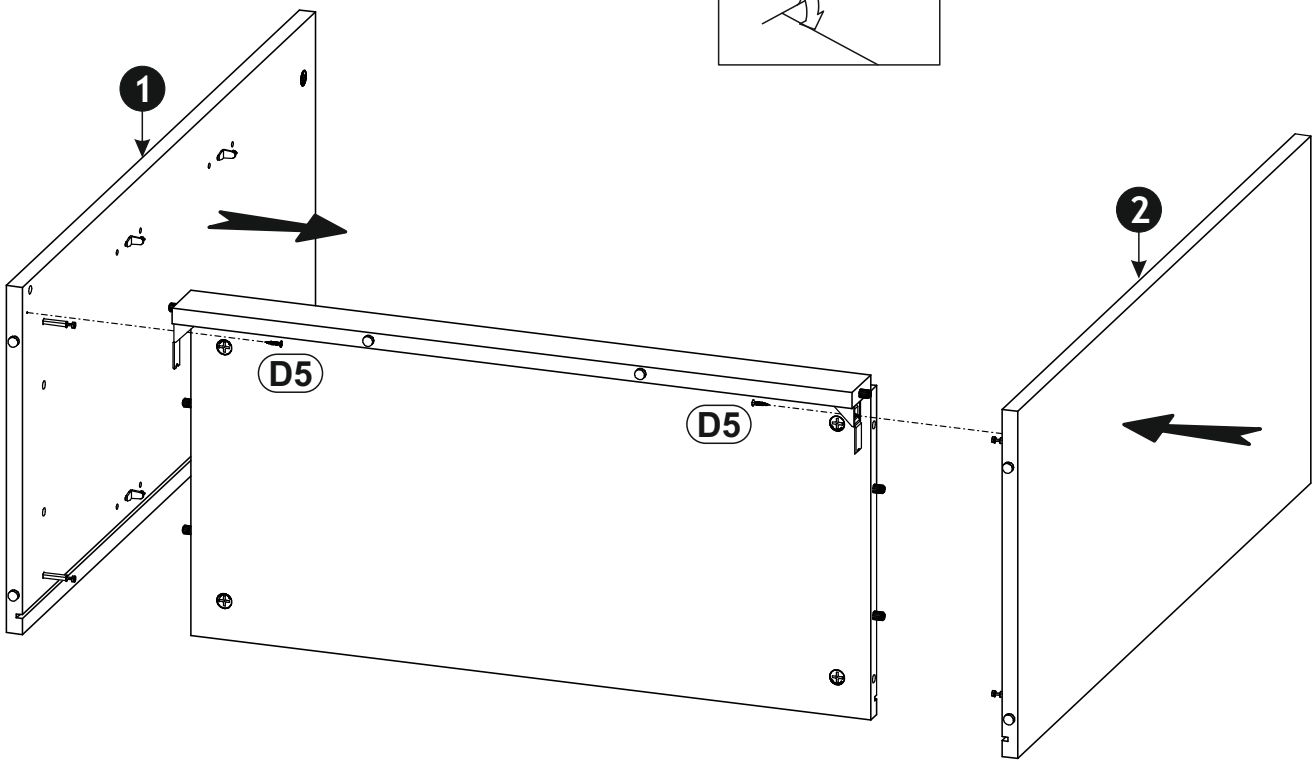

8

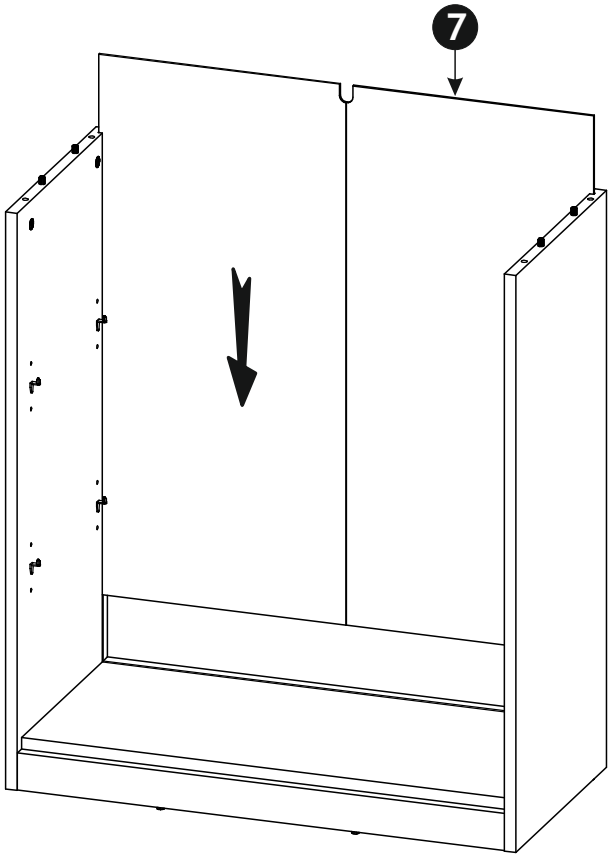

9

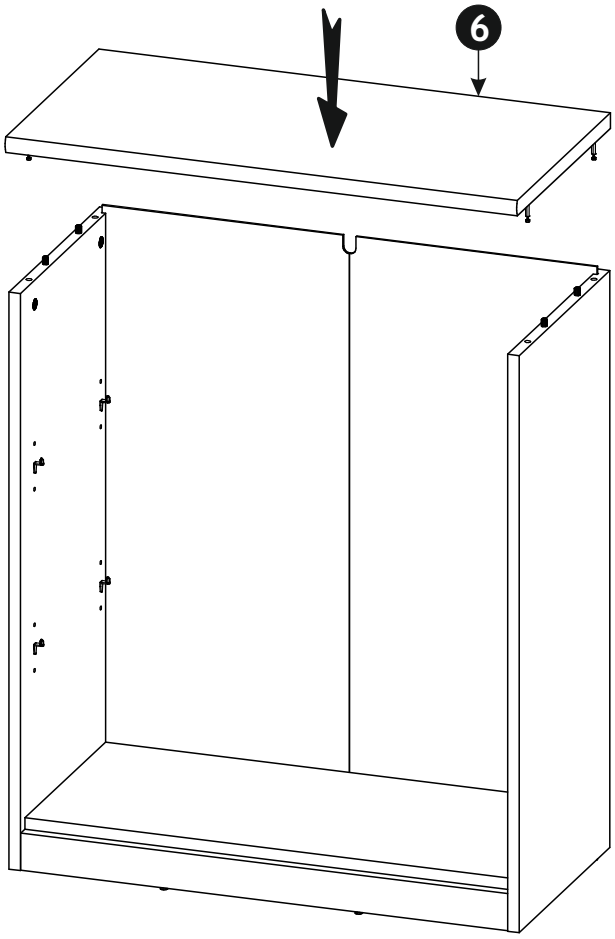

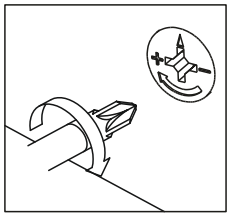

10

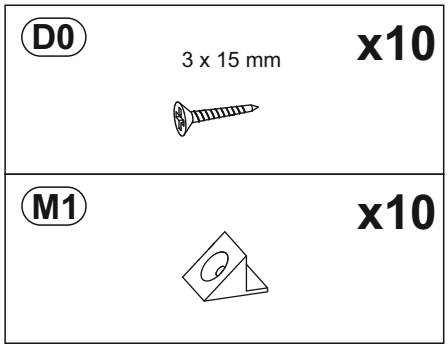

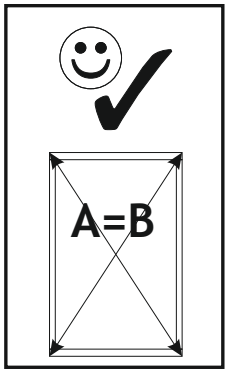

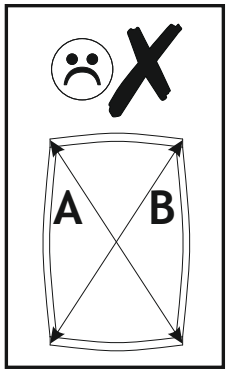

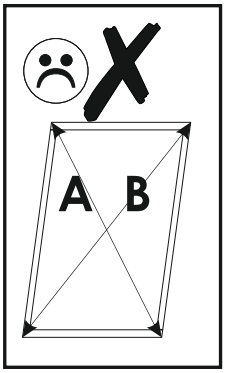

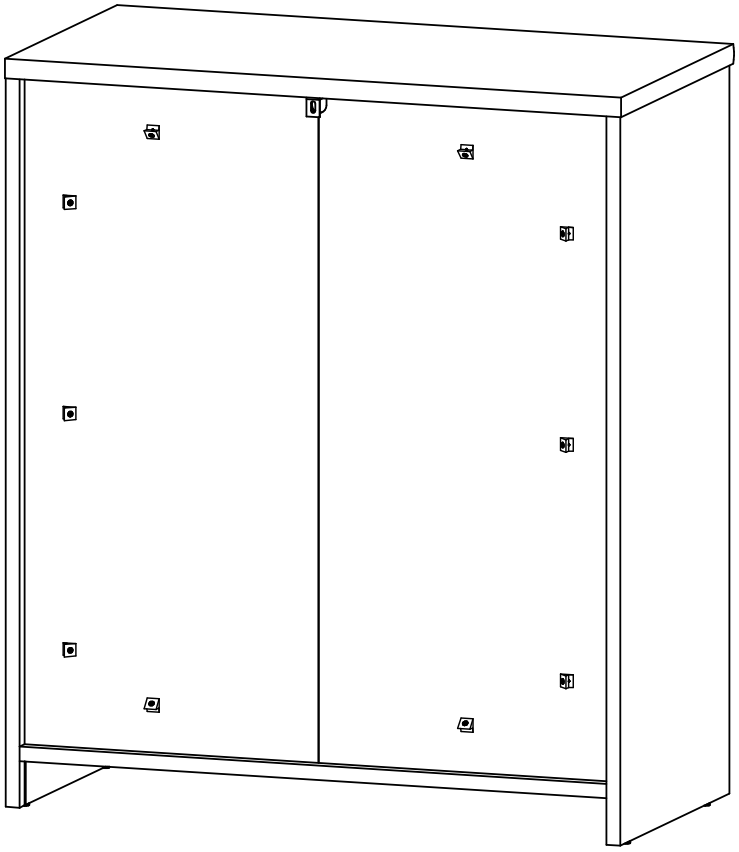

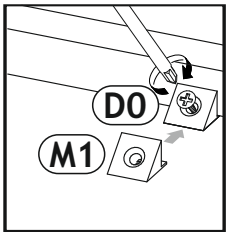

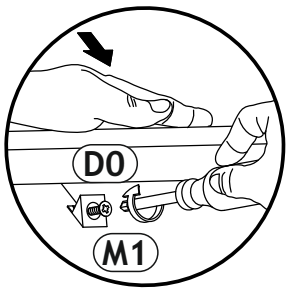

11

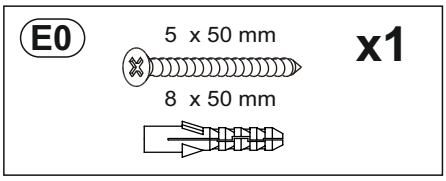

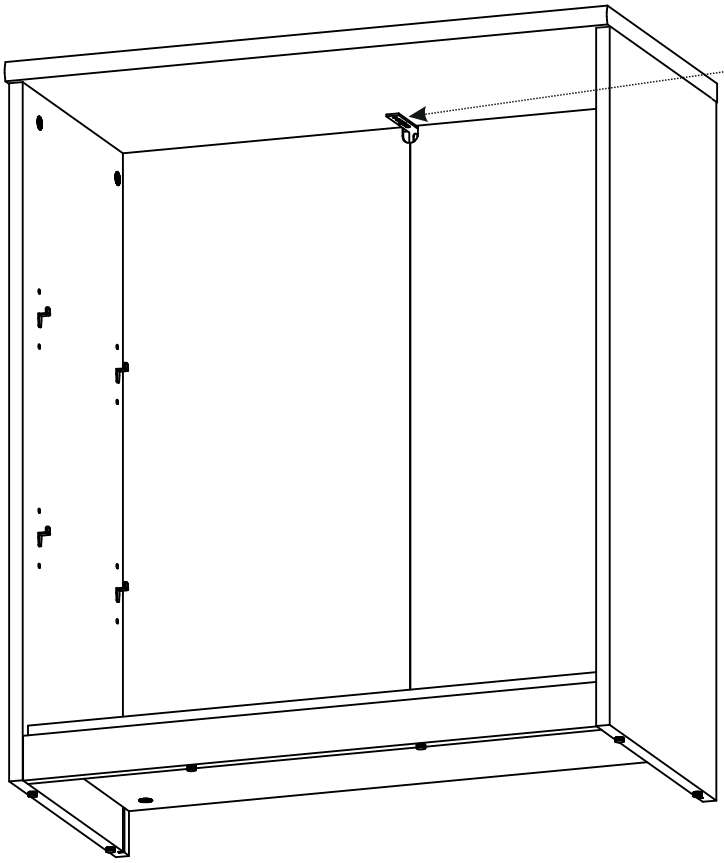

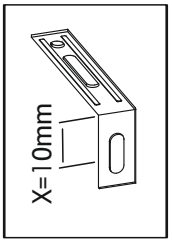

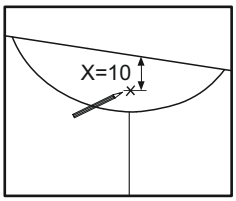

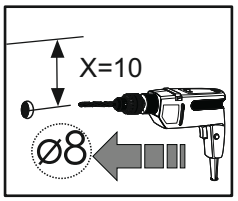

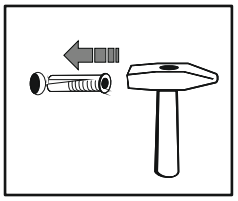

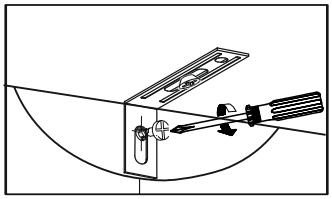

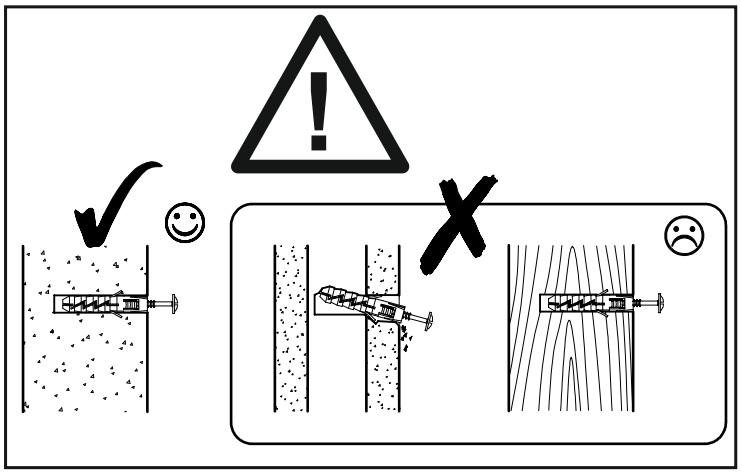

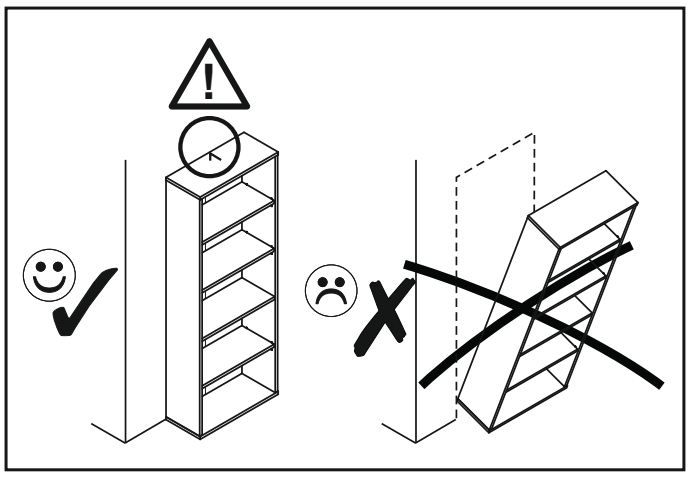

12

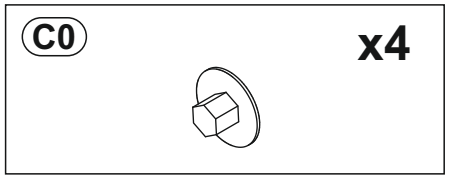

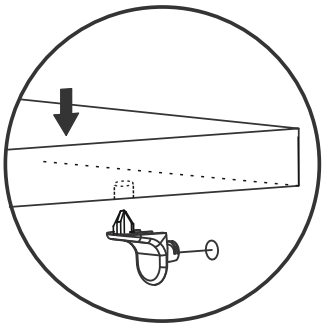

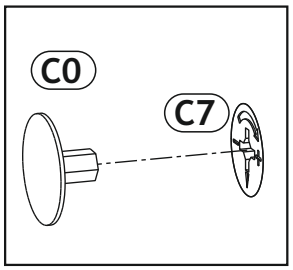

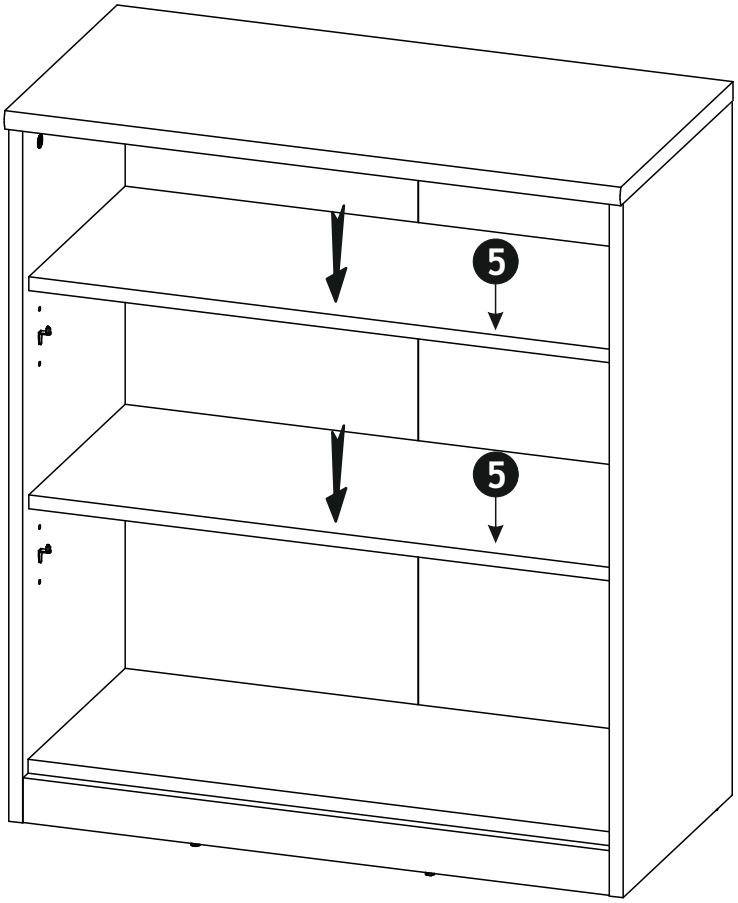

max

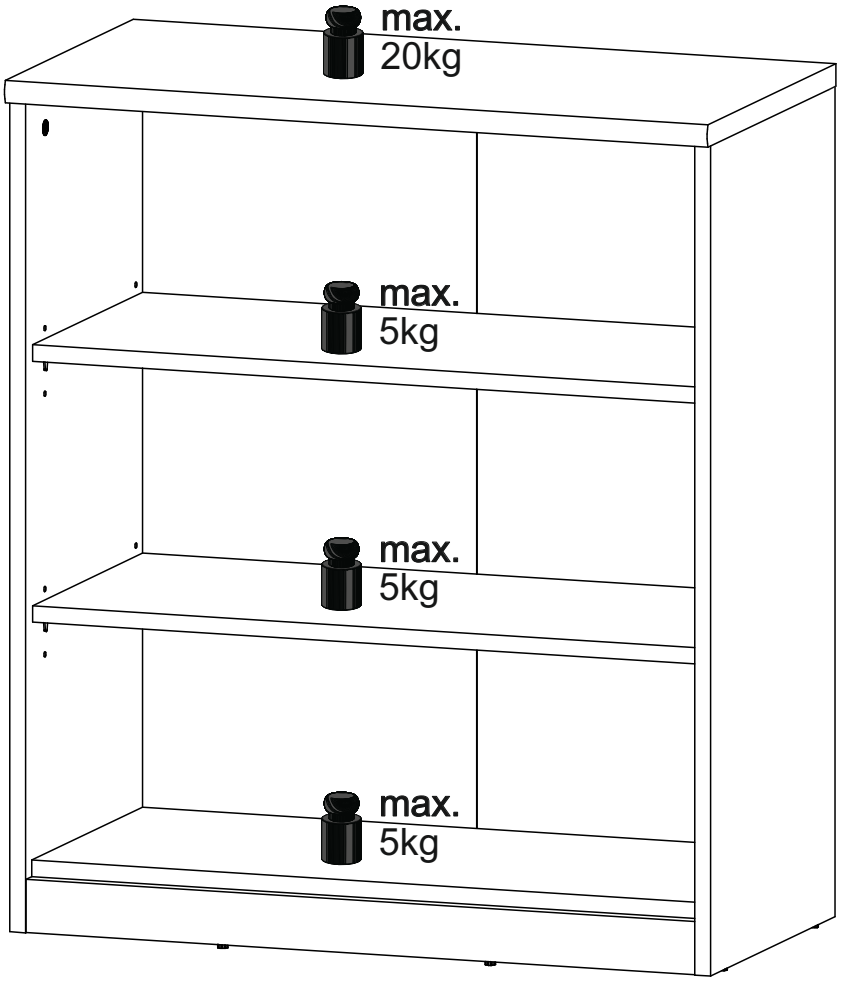
max.
20kg
max.
5kg
max.
5kg
max.
5kg