LES-MMS d.o.o.,
Cesta na Bokalce 40,1000
LJUBLJANA, SLOVENIA

ambia HOME

16300219/01

30 min

A1	A2
B1 B2 B3 B4 B5 B6 B7 B8	C 6x15mm -44
	D 20mm -10
	E 4mm -1

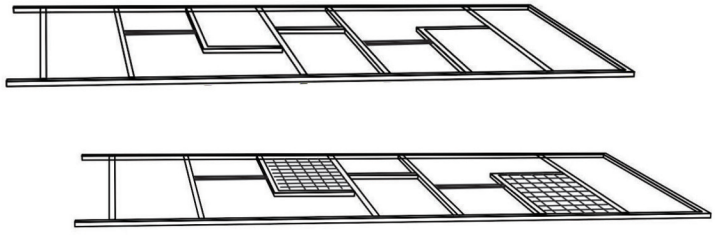
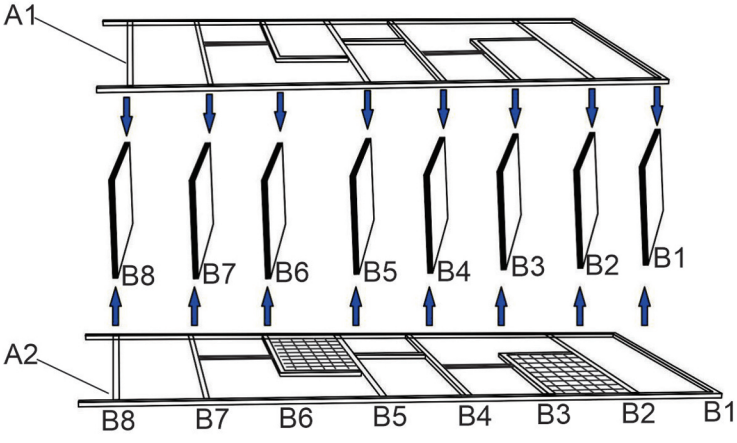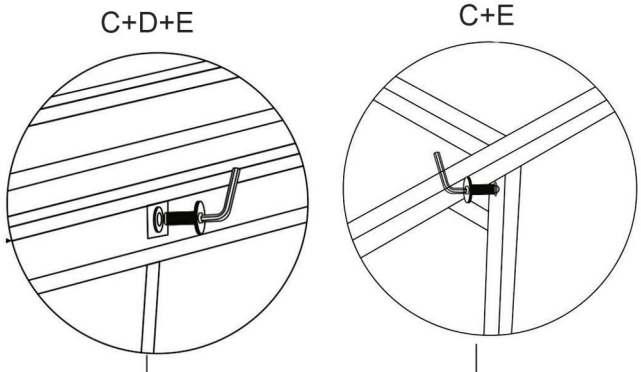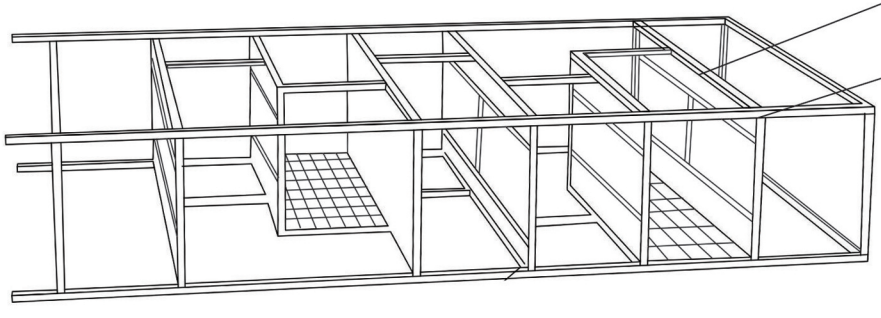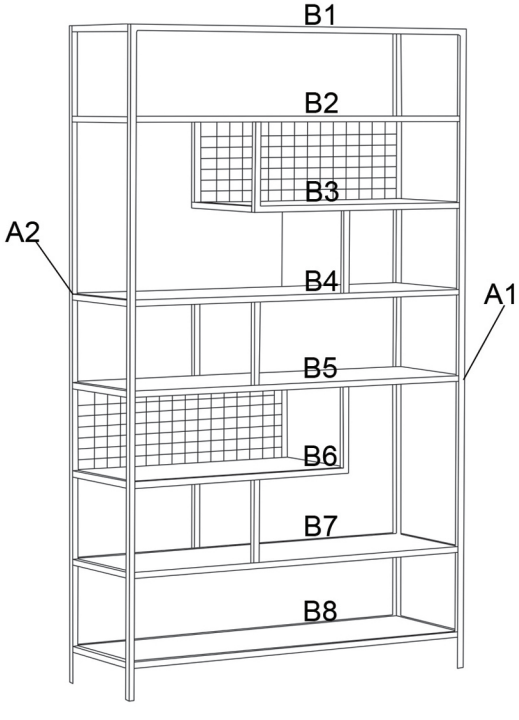
A1+A2