LIZA

05860001 / 03
05860001 / 04
05860001 / 05

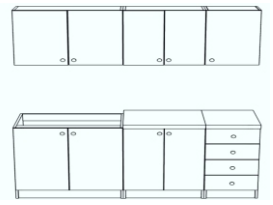

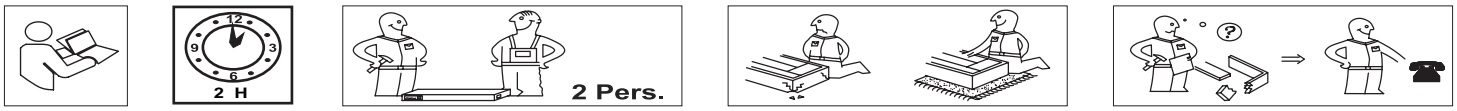

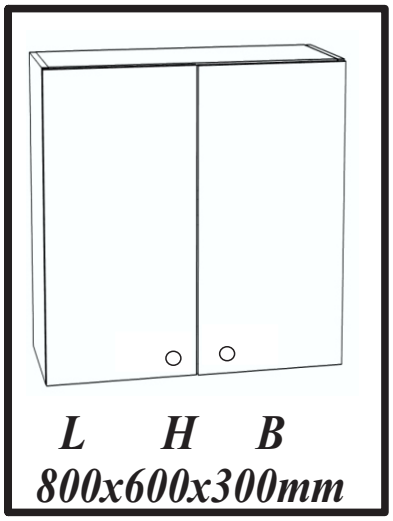

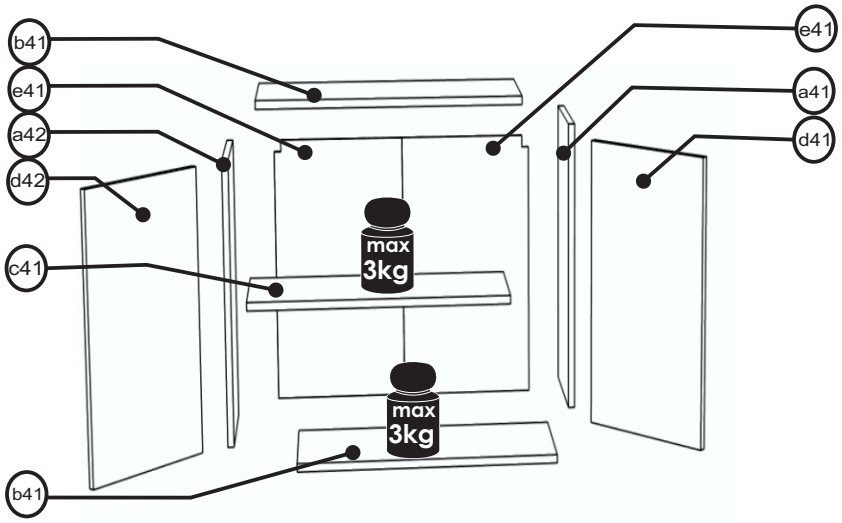

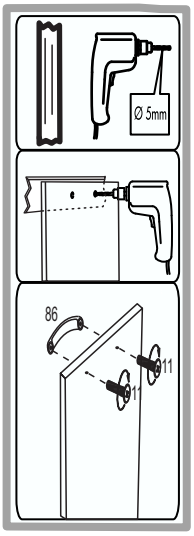

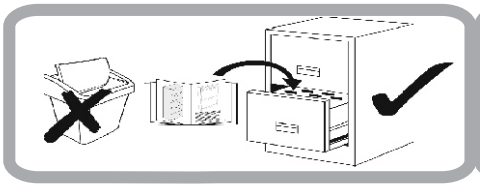

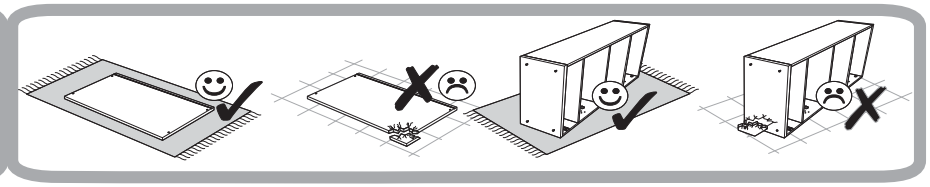

			pcs.	box
1	a41	600mm x 270mm x 16mm	1	5/7
2	a42	600mm x 270mm x 16mm	1	5/7
3	b41	768mm x 270mm x 16mm	2	5/7
4	c41	768mm x200mm x 16mm	1	5/7
5	d41	596mm x 396mm x 16mm	1	5/7
6	d42	596mm x 396mm x 16mm	1	5/7
7	e41	582mm x 590mm x 3.2mm	1	5/7

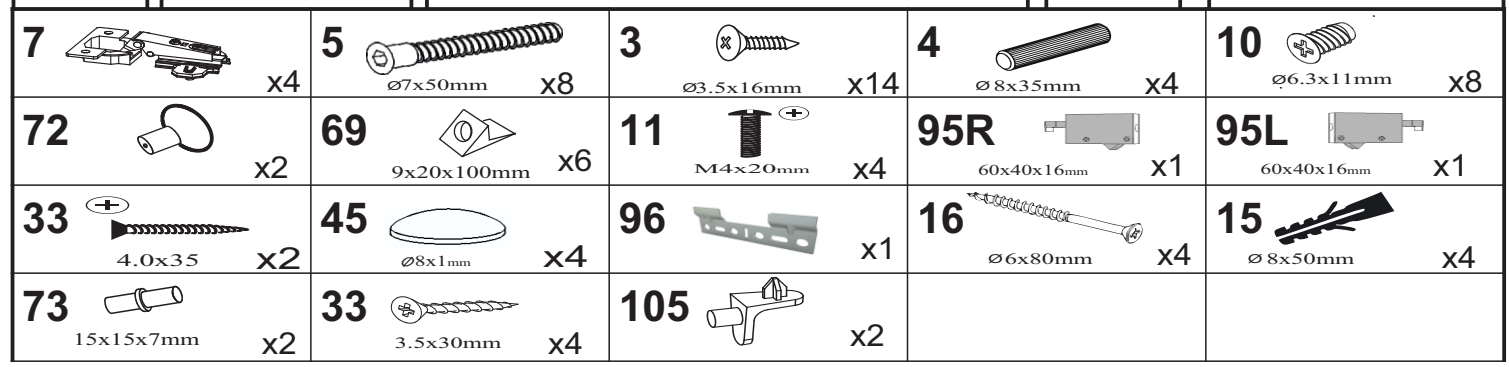

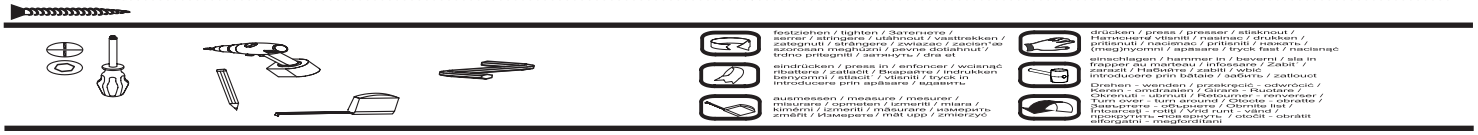

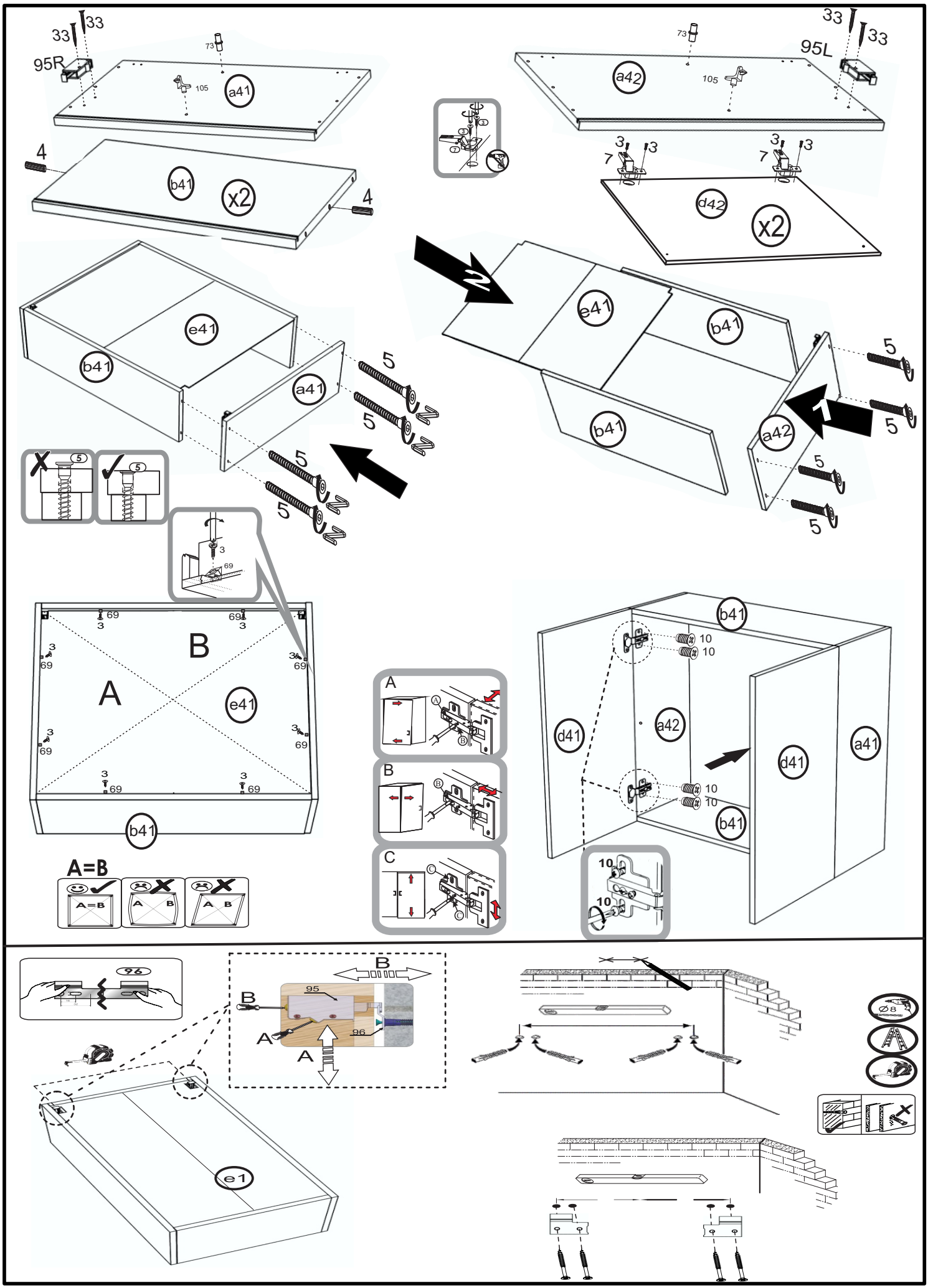
33
33
95R
73
105
a41
4
b41
x2
4
e41
b41
a41
5
5
5
5
73
33
33
95L
a42
105
3
3
7
3
3
7
d42
x2
2
e41
b41
b41
a42
1
5
5
5
5
5
5
3
69
69
3
69
3
B
A
e41
3
69
3
69
3
69
3
69
b41
A=B
A
B
C
b41
10
10
d41
a42
d41
a41
10
10
b41
10
10
96
B
95
B
A
96
A
e1
Ø8