00370030/01

XXXLutz KG
Römerstraße 39
A-4600 Wels, Austria
E-Mail: Info@xxxlutz.at



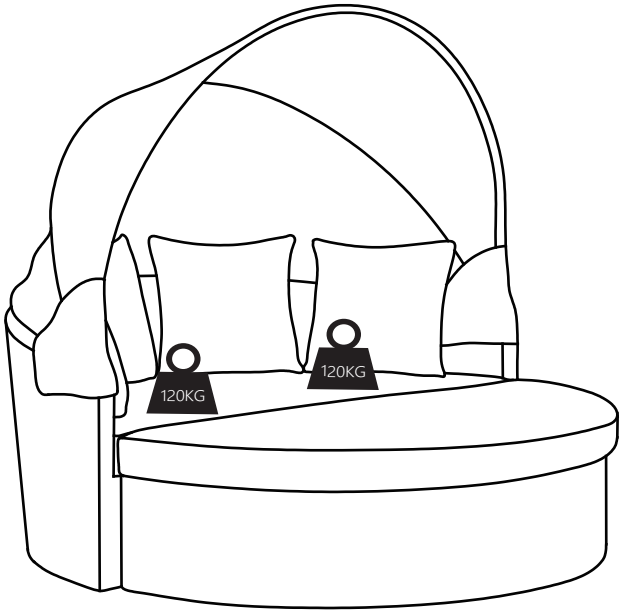

A	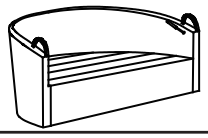	1PC	G		8PCS
B		1PC	H		1PCS
C		1PC	I		5PCS
D	 M6*20mm	8PCS	J		1PC
E		8PCS	K		4PCS
F		8PCS			



00370030/01

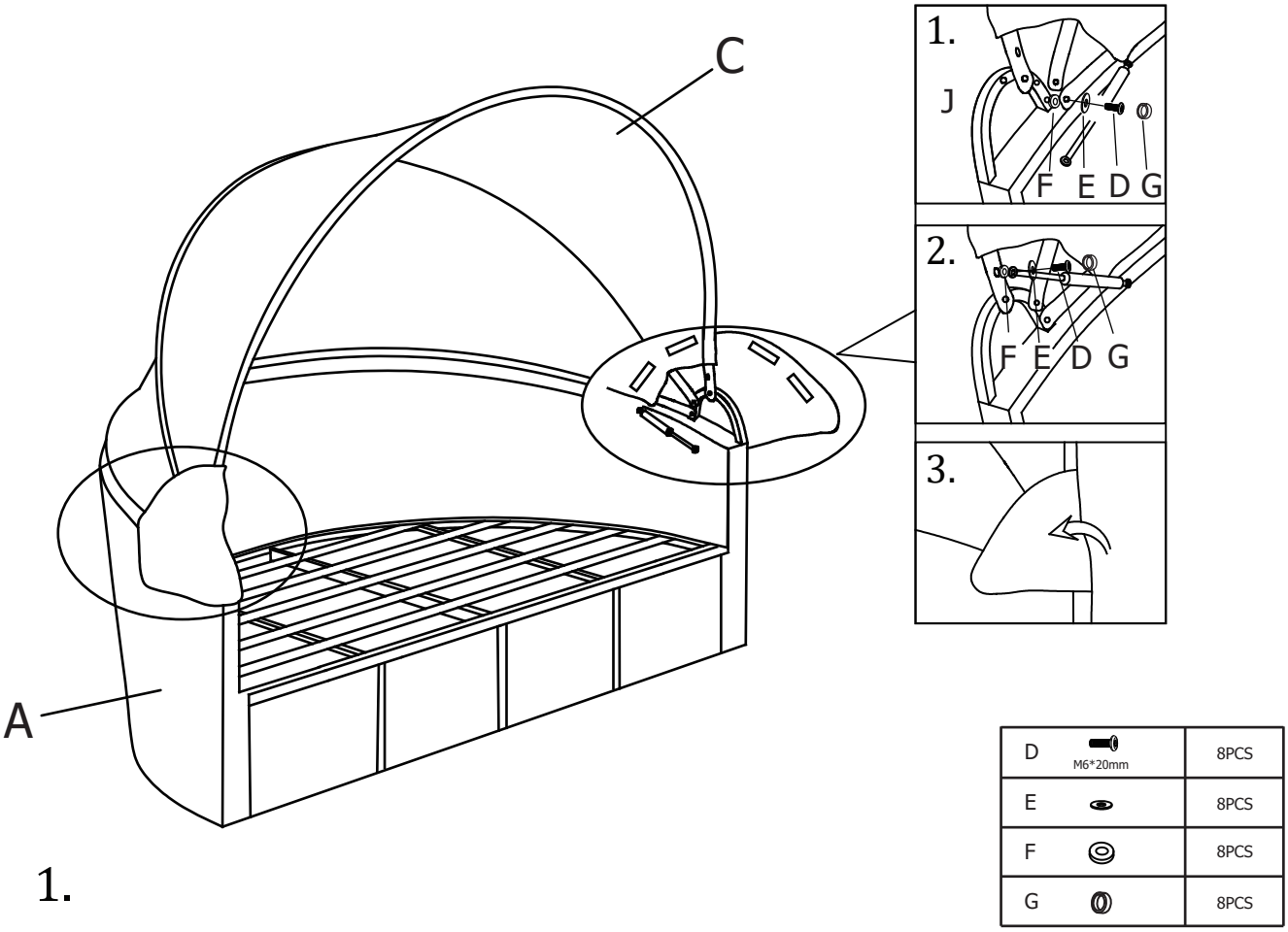

D	M6*20mm	8PCS
E		8PCS
F		8PCS
G		8PCS

1.

2.

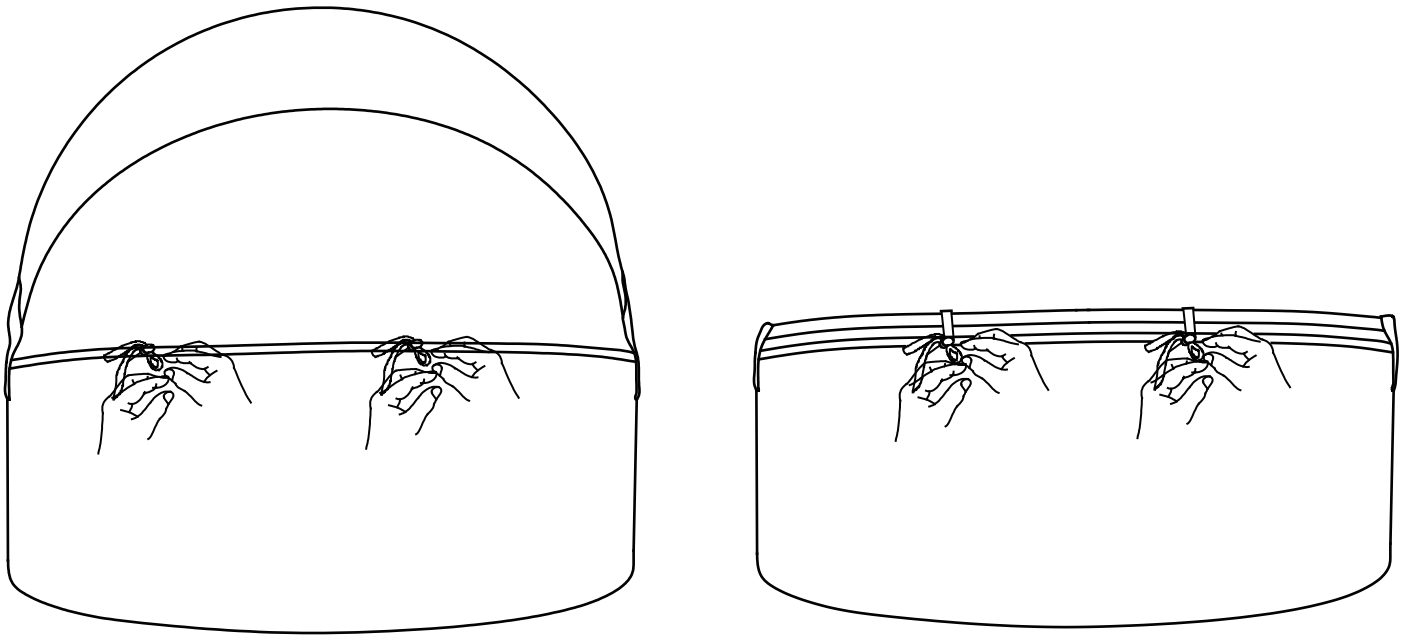



00370030/01

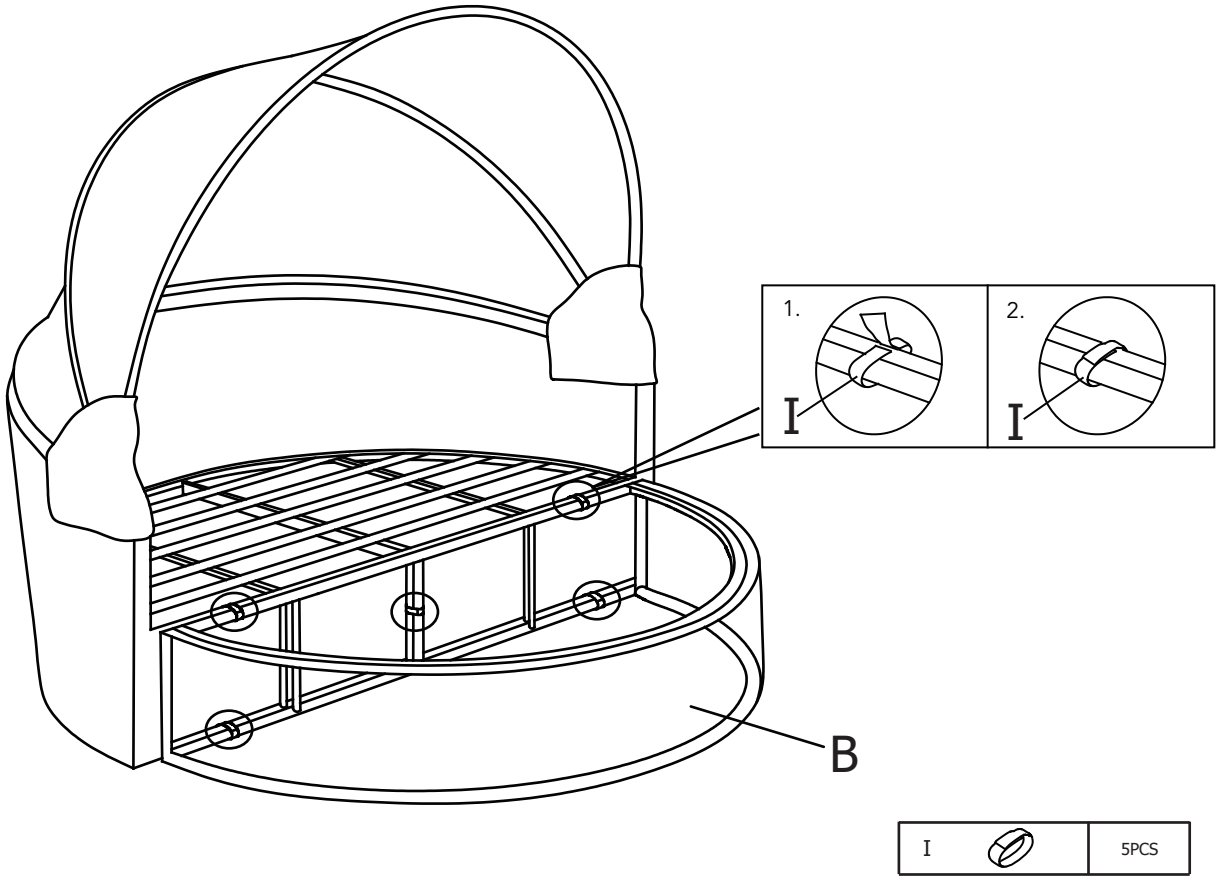

3.

4.

