CAMRON - KOMMODE

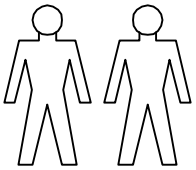

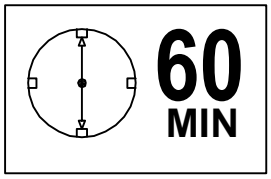

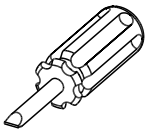

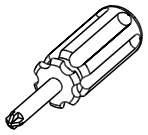

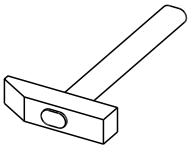

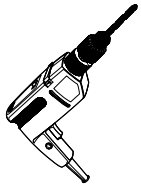

Ø8

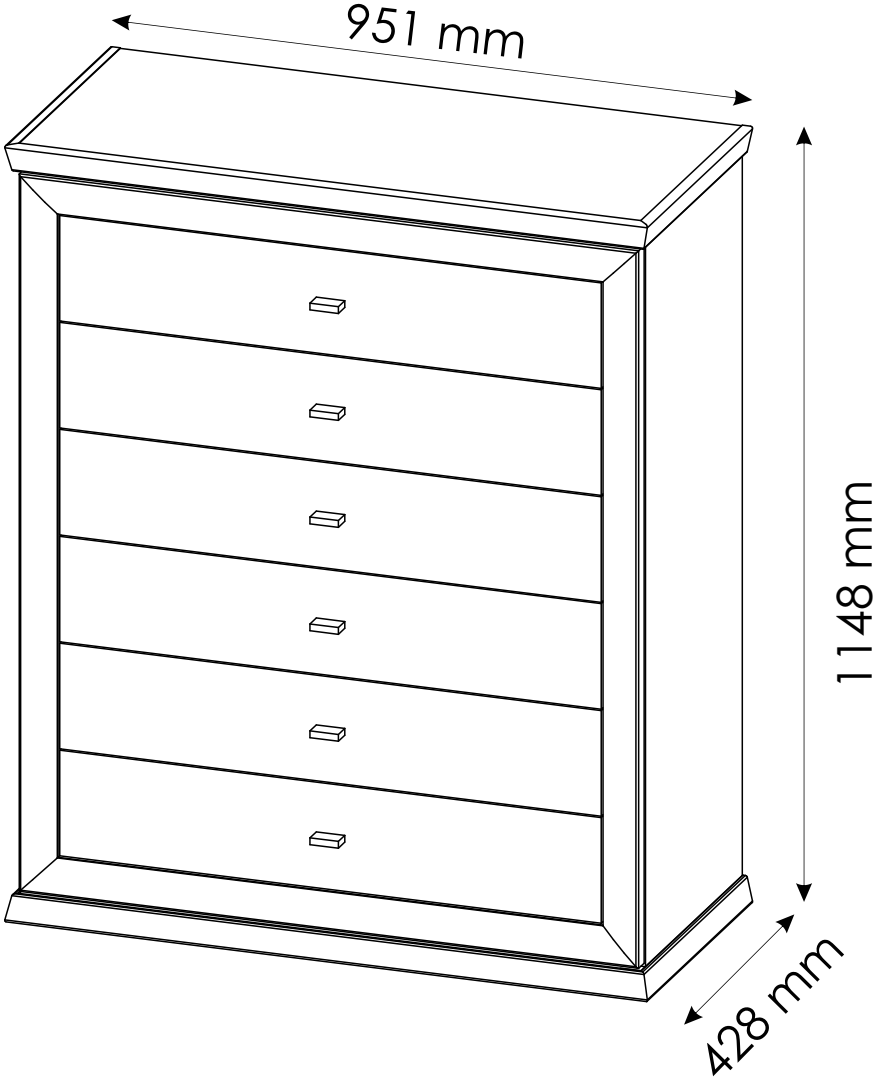

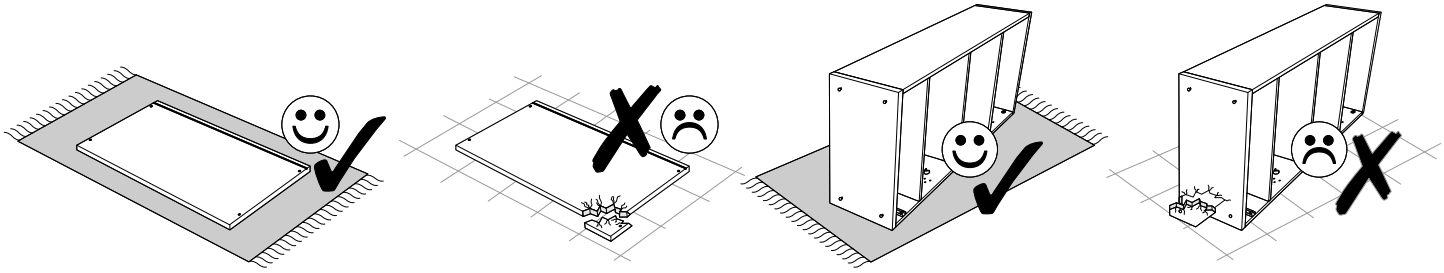

CAMRON - KOMMODE

B1 f 7 x 50 mm x18	C0 x24	C2 x50
D0 3 x 15 mm x16	D21 5 x 13 mm x1	D31 6,3 x 13 mm x48
E0 5 x 50 mm 8 x 50 mm x1	H2 4 x 22 mm x12	K 4mm x1
L6 x6	M1 x16	N14 x6 L-350mm
P0 x1	U2 x4	

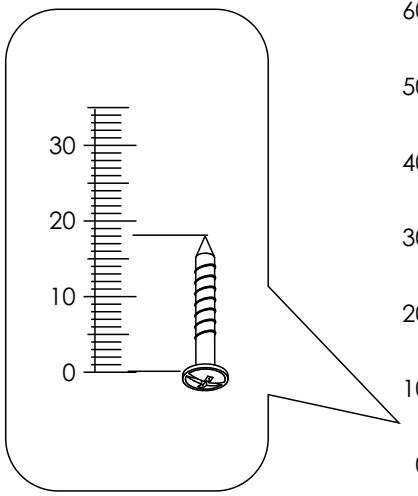

CAMRON - KOMMODE

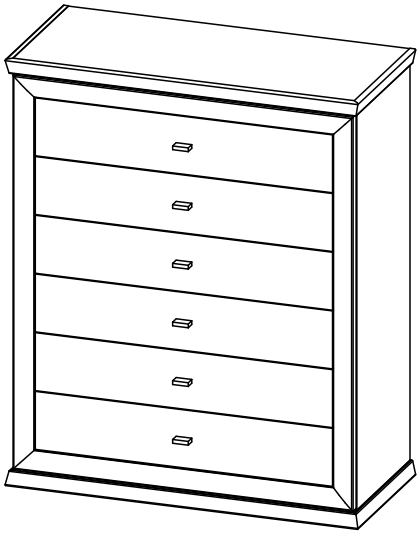

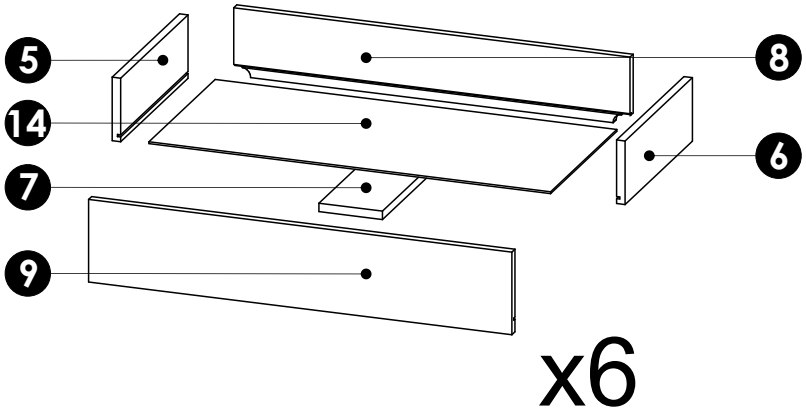

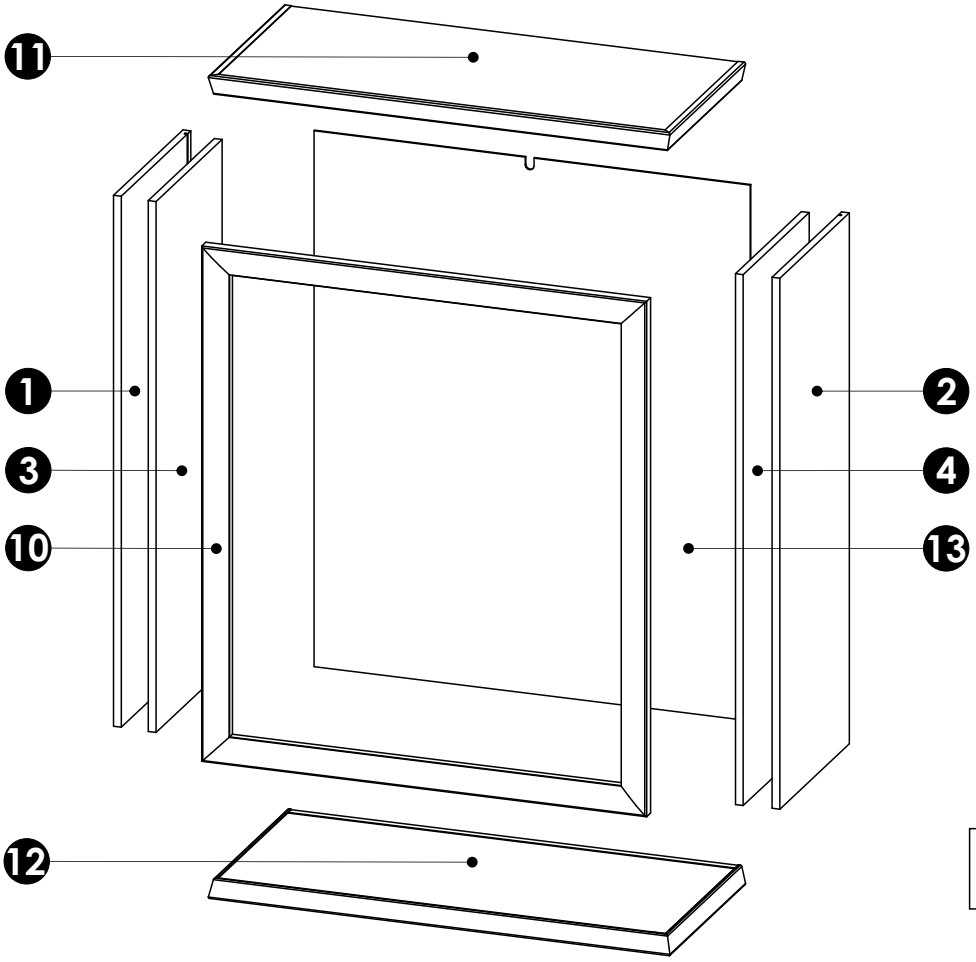

1	1092	393	16	x1	1/3
2	1092	393	16	x1	1/3
3	1092	373	16	x1	1/3
4	1092	373	16	x1	1/3
5	350	120	16	x6	1/3
6	350	120	16	x6	1/3
7	334	120	16	x6	1/3
8	749	128	16	x6	2/3
9	800	156	16	x6	2/3
10	1060	915	25	x1	2/3
11	951	428	40	x1	3/3
12	951	428	40	x1	3/3
13	1102	897	2.8	x1	2/3
14	759	344	2.8	x6	2/3
					1/3

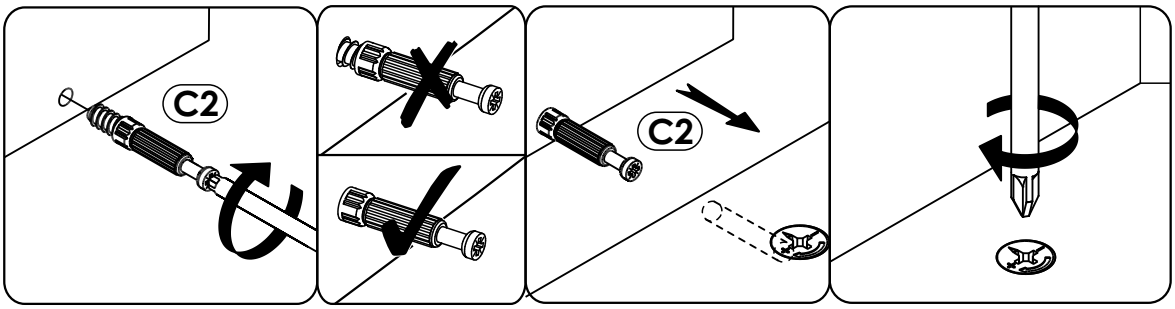

1

D31	N14
6,3 x 13 mm x24	x6
	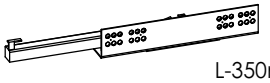 L-350mm

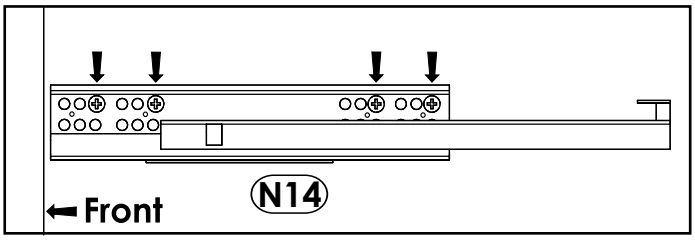

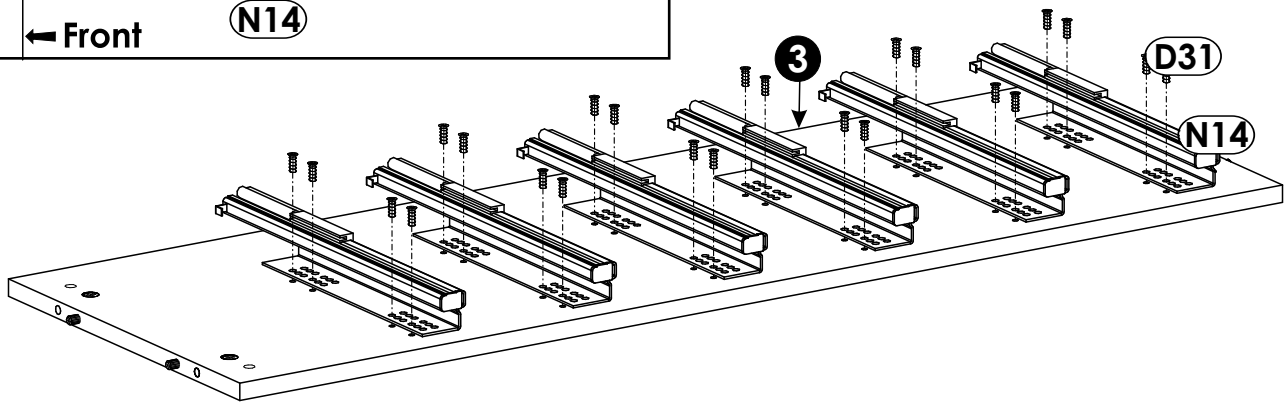

2

D31	N14
6,3 x 13 mm x24	x6
	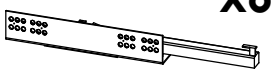 L-350mm

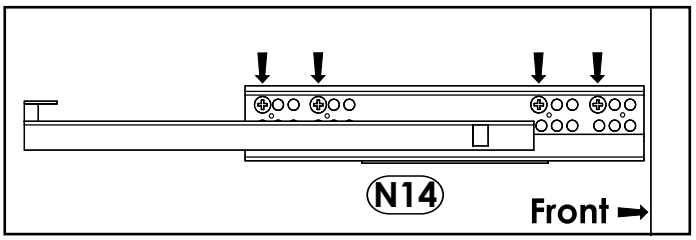

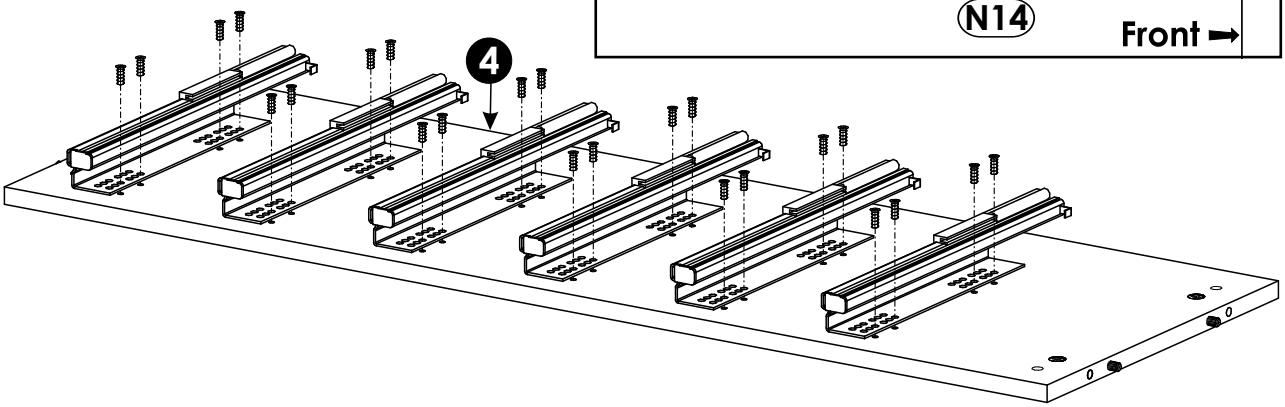

3

C2	D21	P0
x8	5 x 13 mm x1	x1

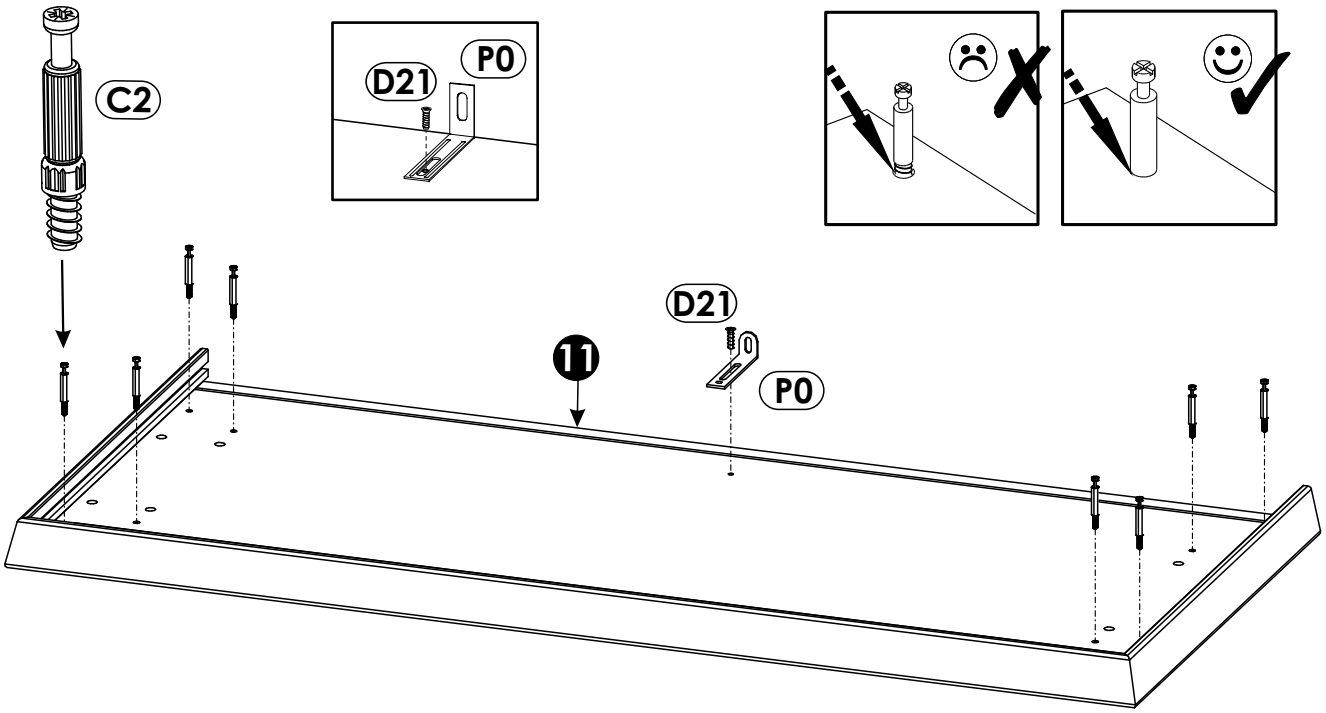

4

C2	U2
x8	x4

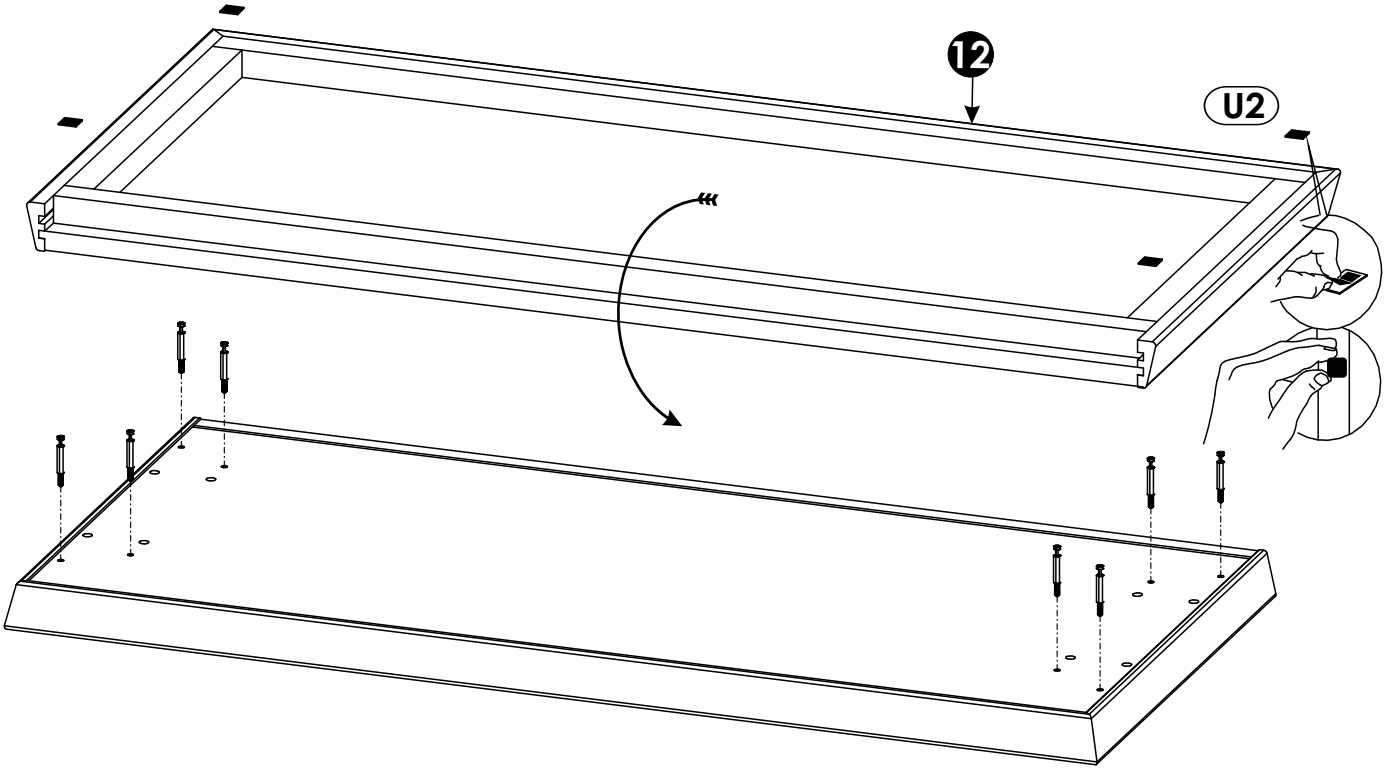

5

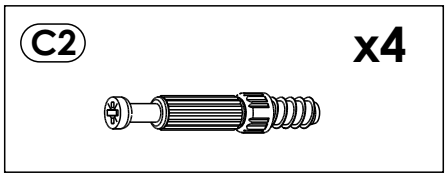

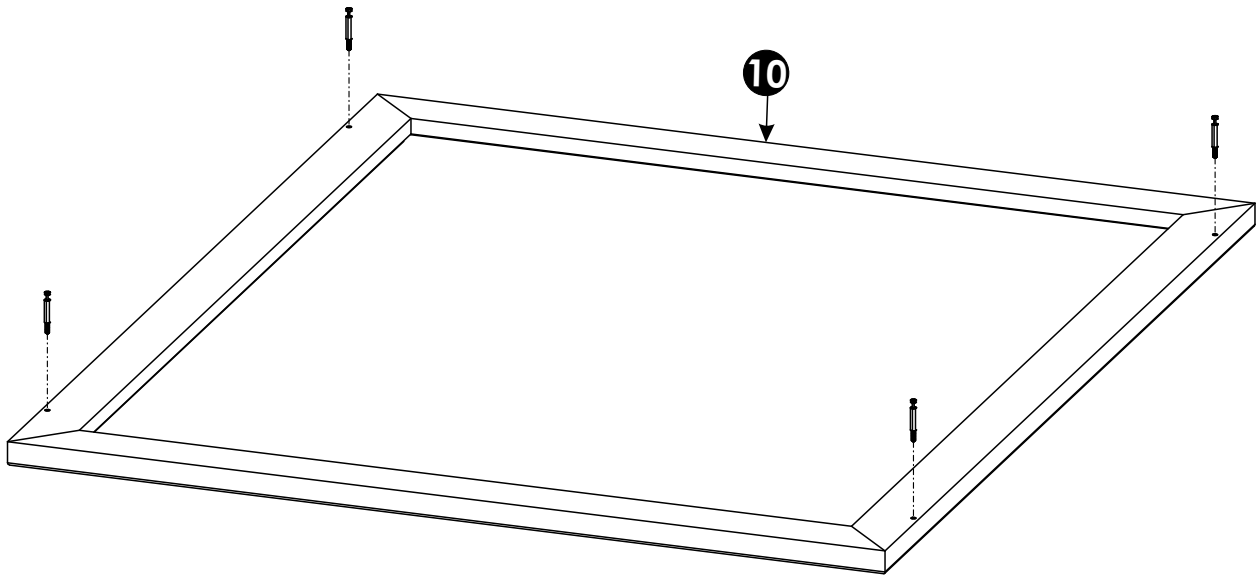

6

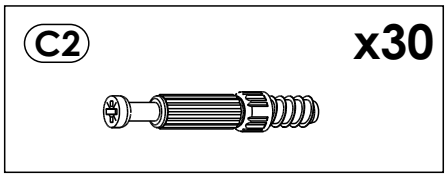

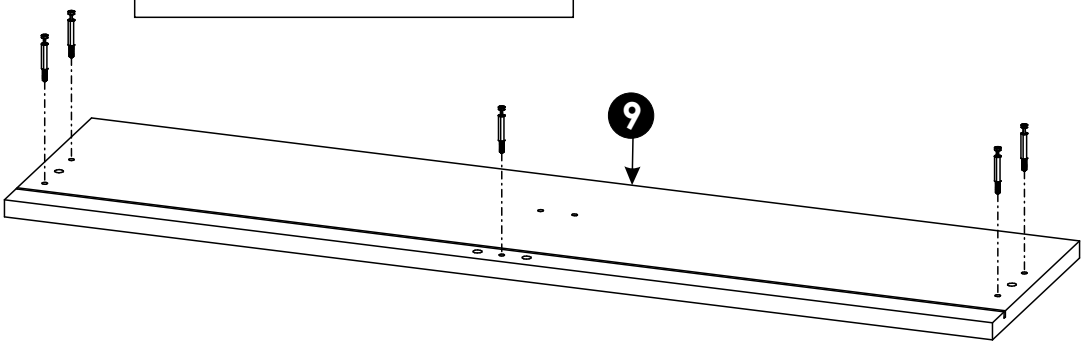

7

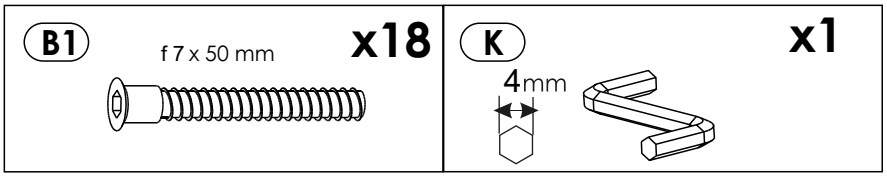

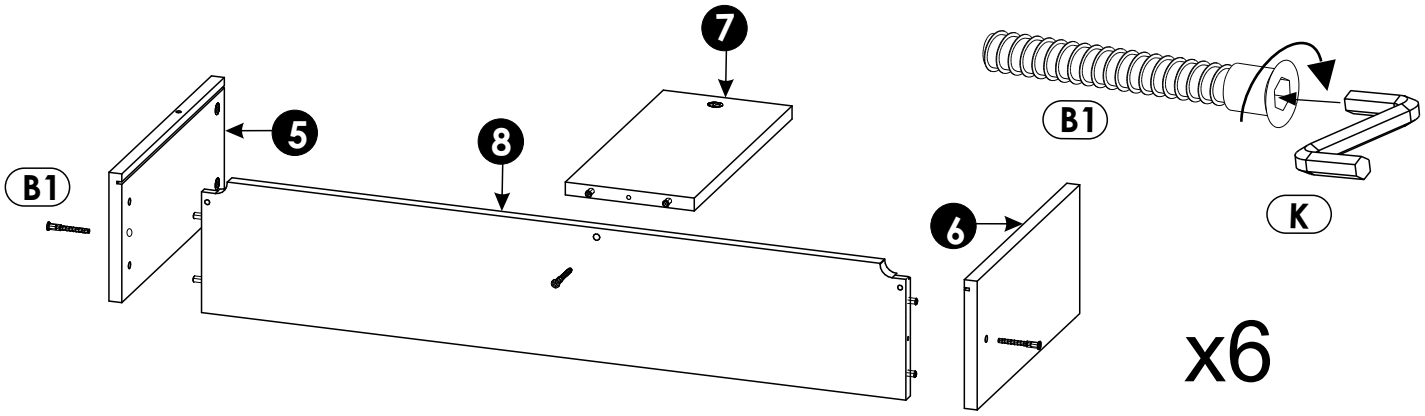

8

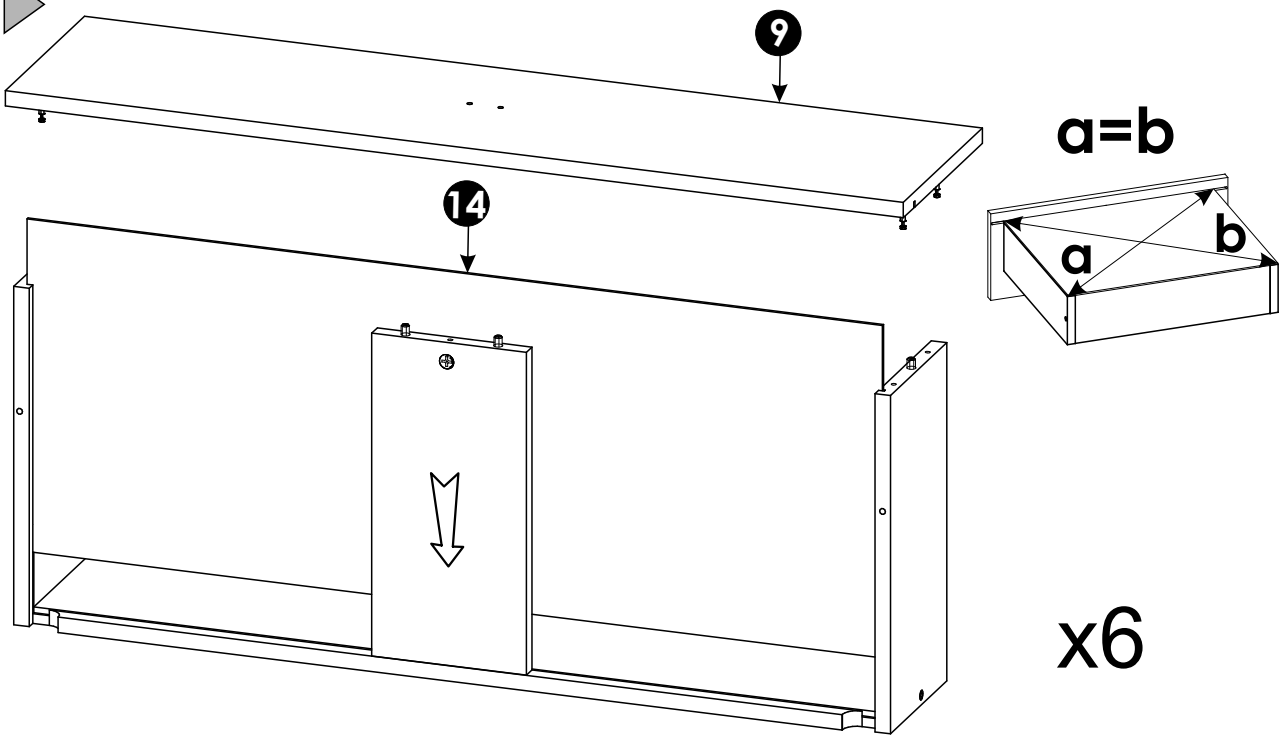

9

H2 4 x 22 mm x12	L6 x6

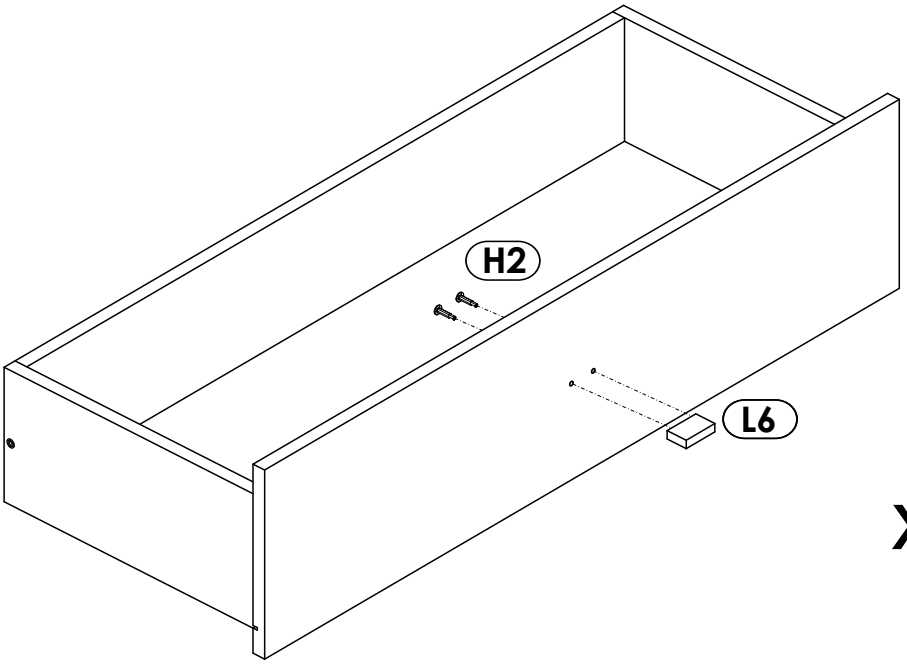

10

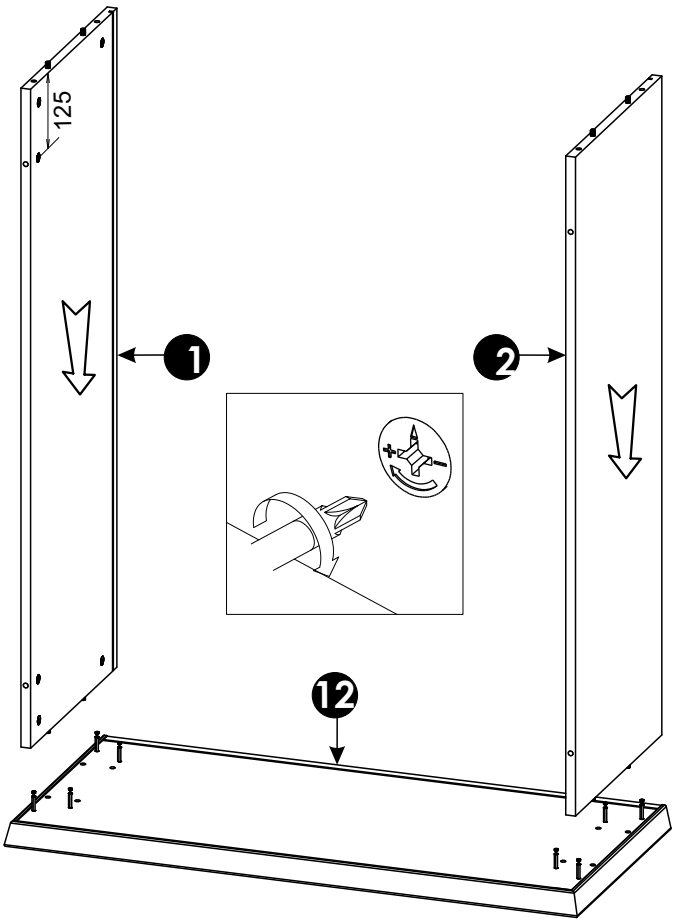

11

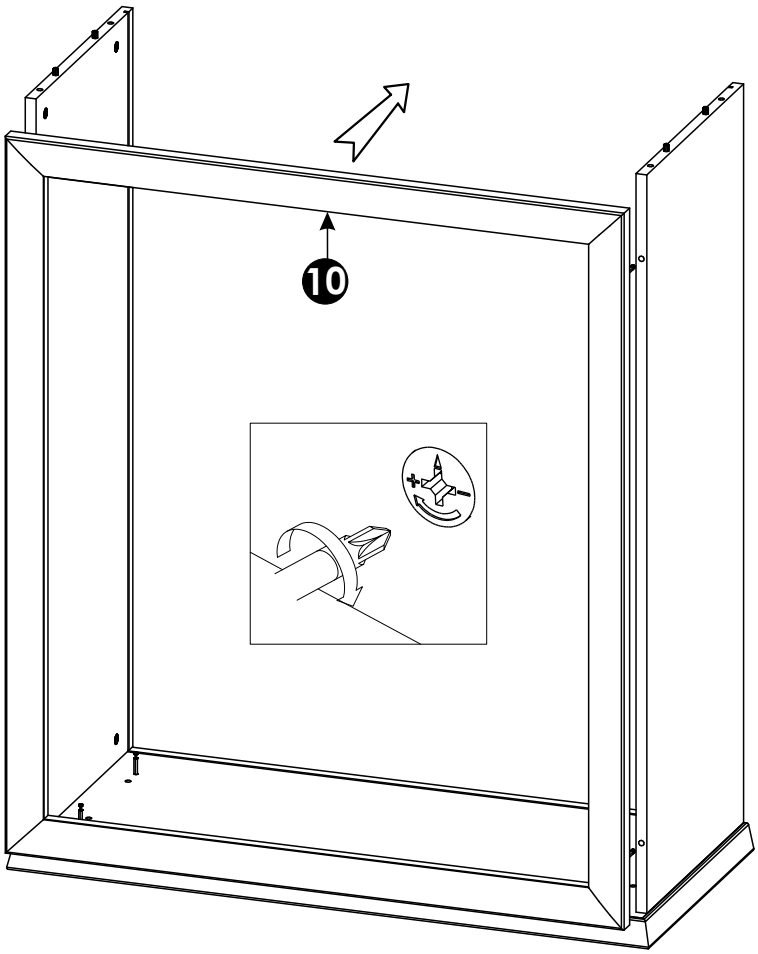

12▶

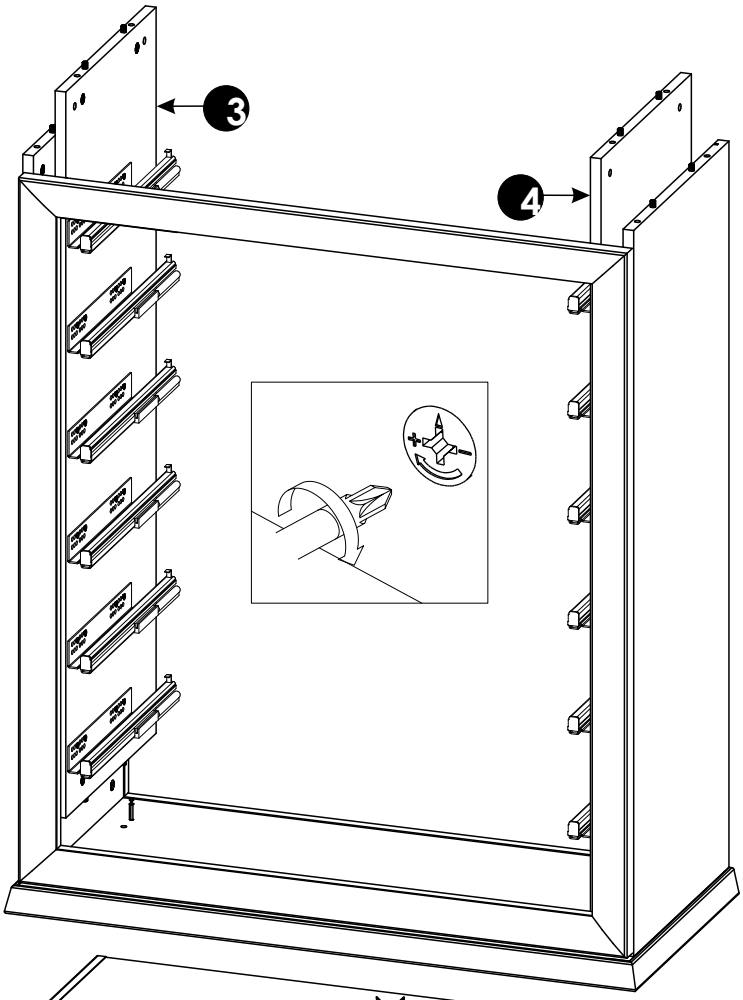

13▶

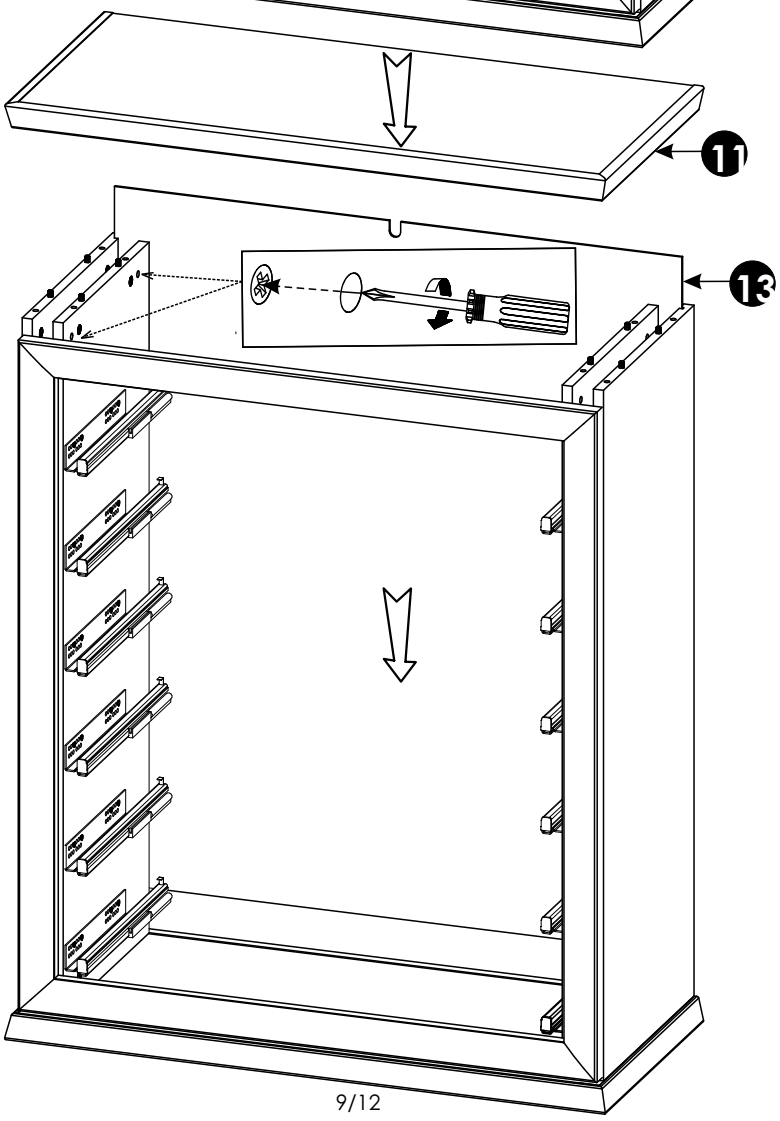

14

D0	M1
3 x 15 mm x16	x16

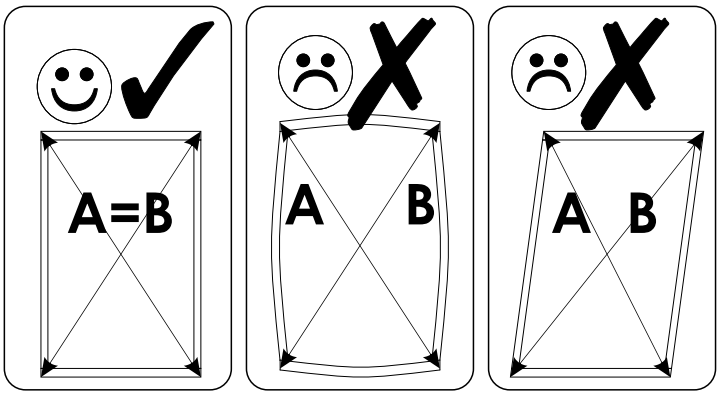

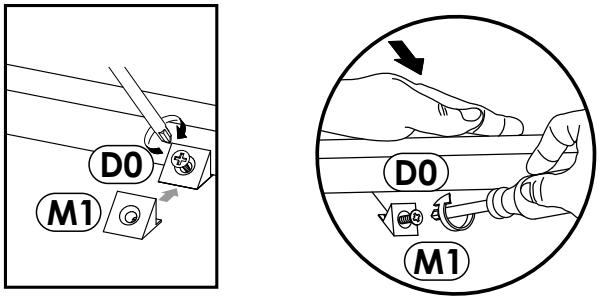

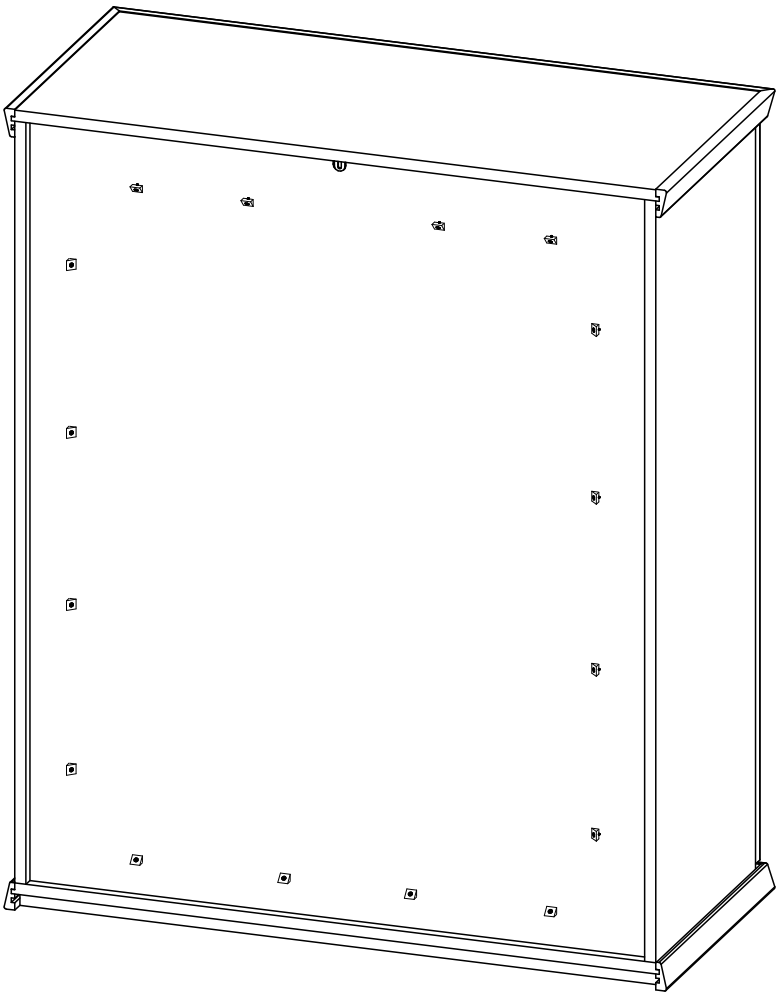

15

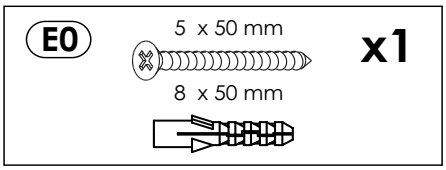

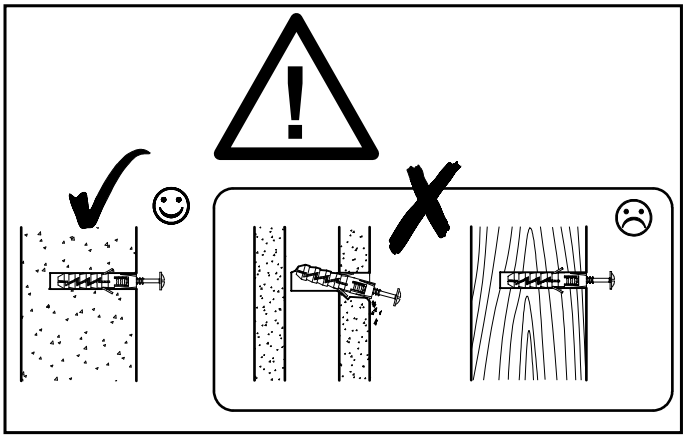

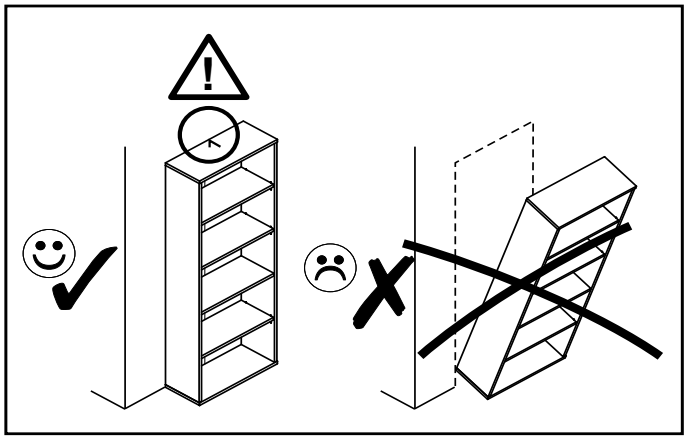

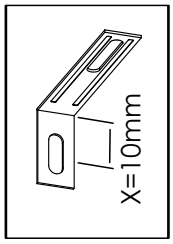

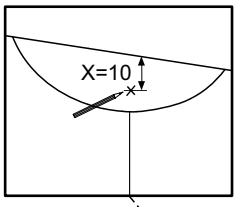

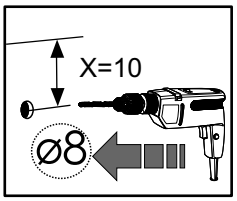

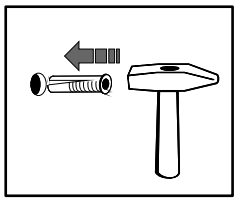

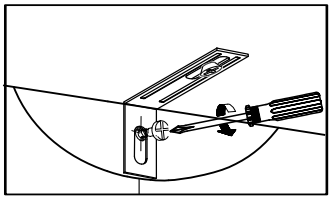

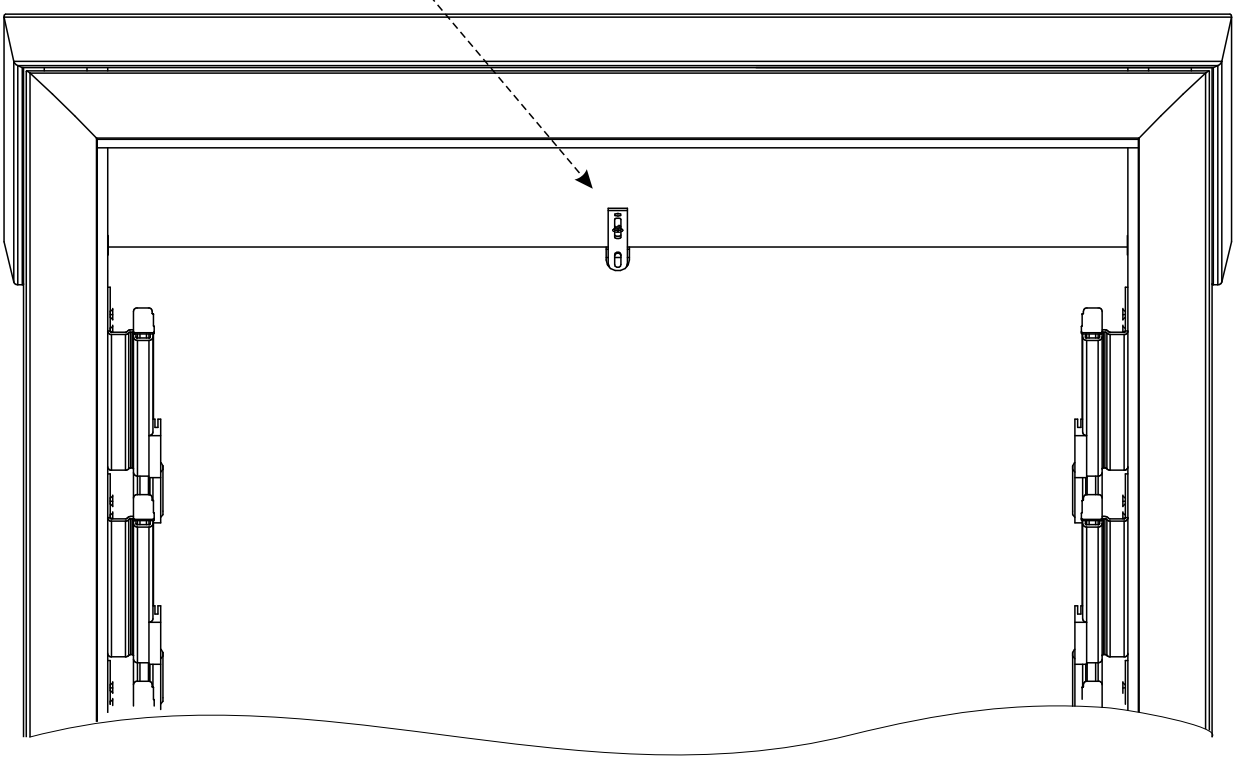

16

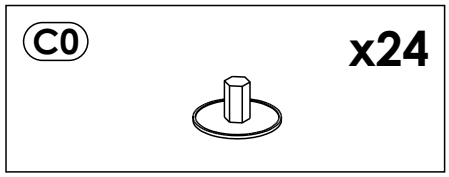
C0
x24

max

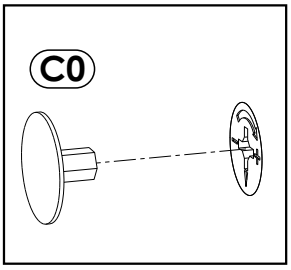
C0

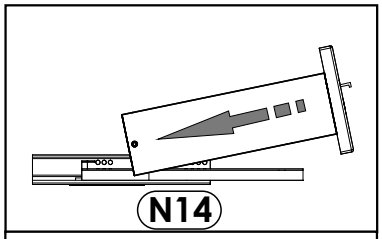
N14

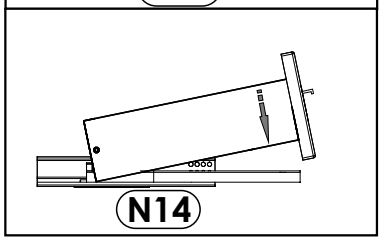
N14

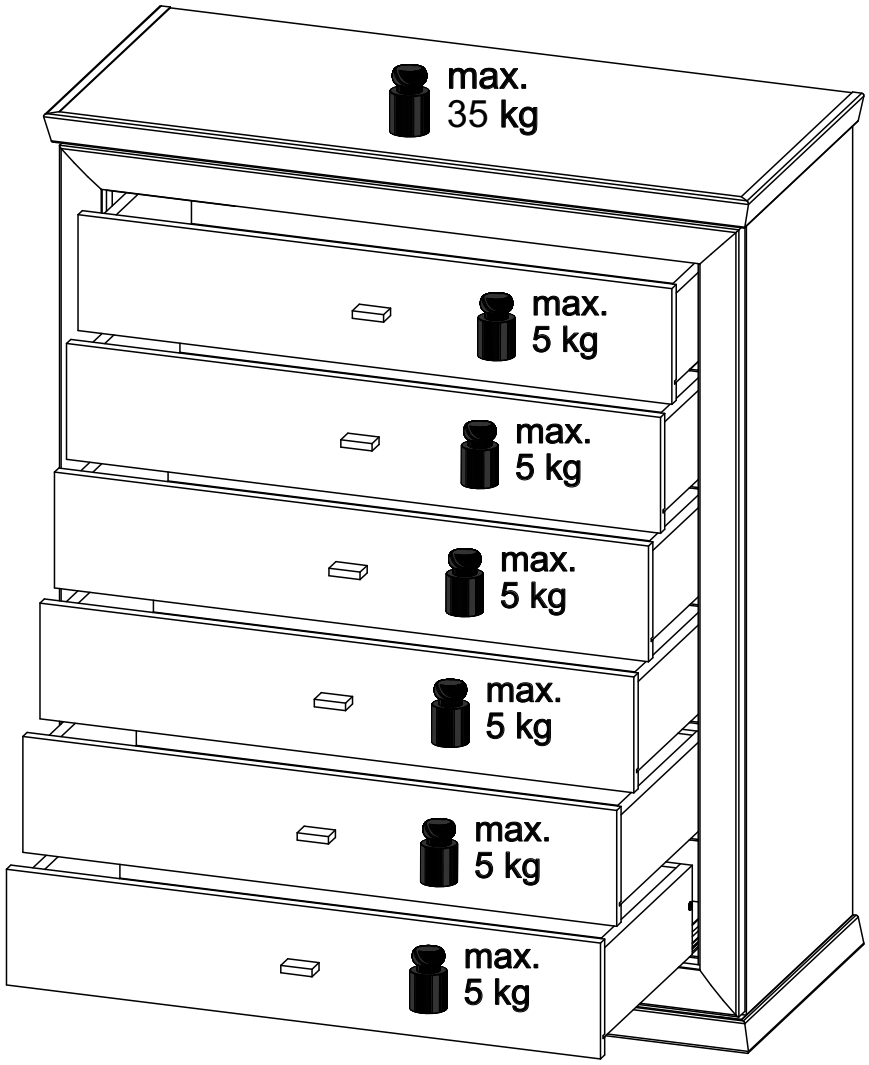
max.
35 kg
max.
5 kg
max.
5 kg
max.
5 kg
max.
5 kg
max.
5 kg
max.
5 kg

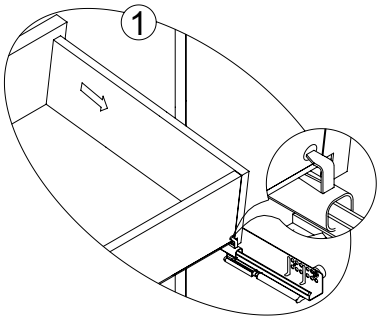
1

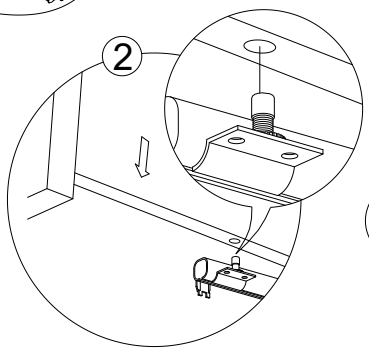
2

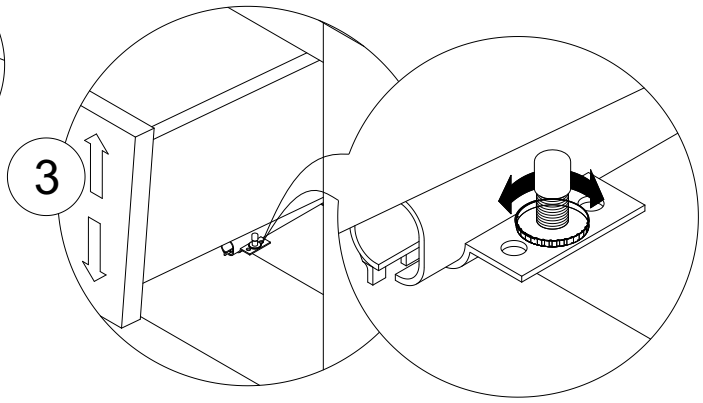
3