EASY TYP 106

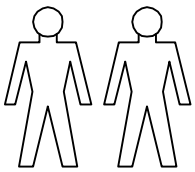

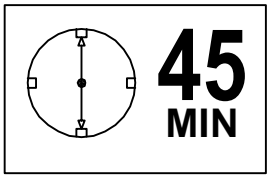

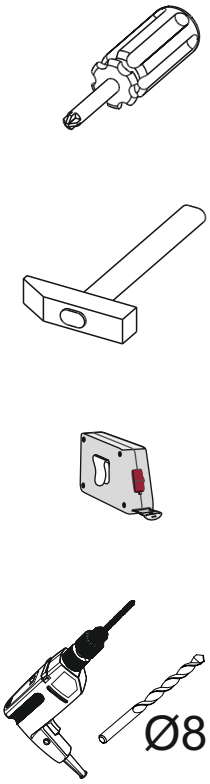

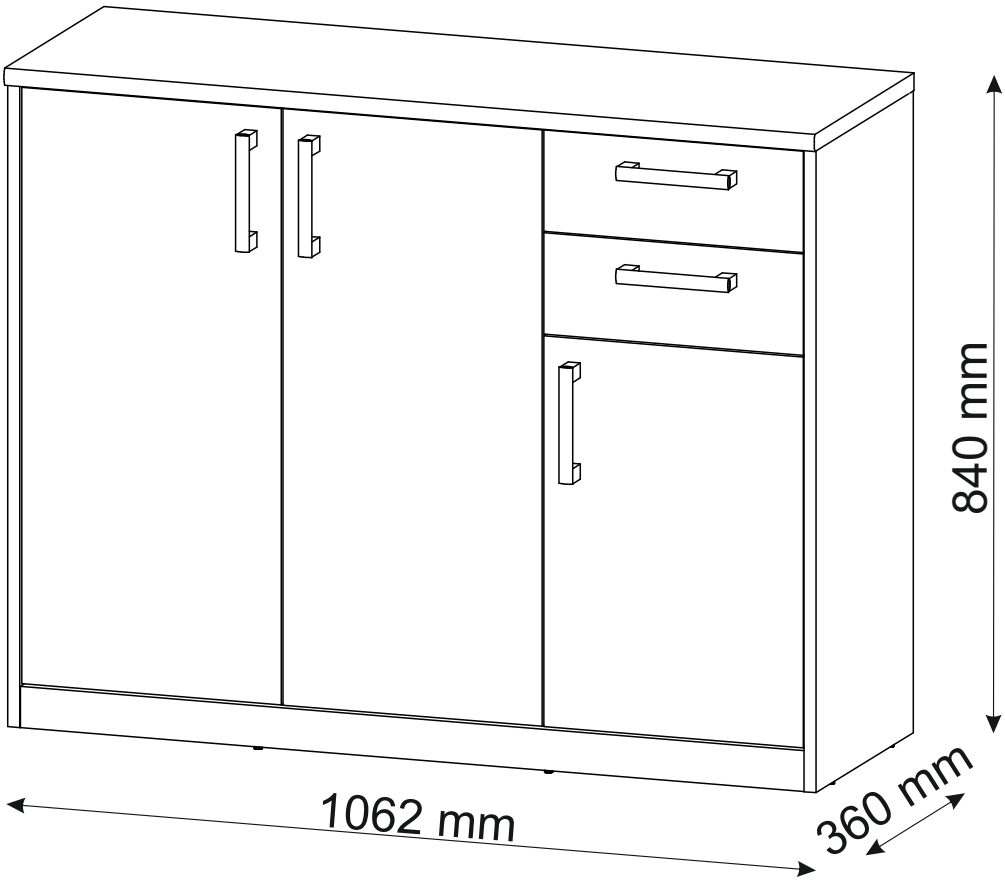

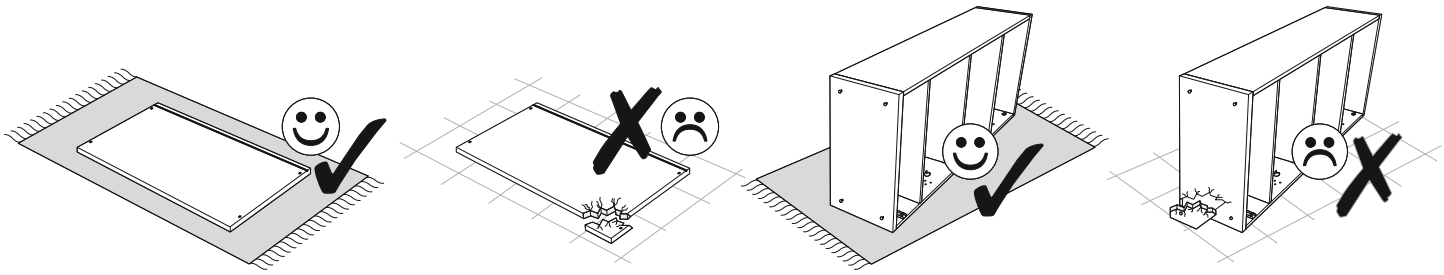

EASY TYP 106

A0 8 x 30mm	x22	
B0	x3	
B1 f 7x 50 mm	x9	
C0	x6	
C2	x14	
C7 16mm	x14	
D0 3 x 15 mm	x30	
D5 3,5 x 16 mm	x22	
D10 4 x 16 mm	x12	
D16 4,2 x 28 mm	x10	
D21 5 x 13 mm	x14	
E0 5 x 50 mm / 8 x 50 mm	x2	
J4	x4	
J5	x2	
J6	x6	
K 4mm	x1	
L5	x5	
M1	x26	
N1 L-300	x2	
P0	x2	
P20	x5	
Q3	x12	
Q4	x2	
T3	x8	
U0	x6	

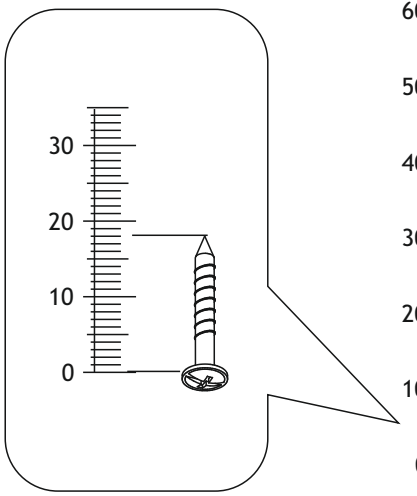

EASY TYP 106

1	812	350	16	x1	1/2
2	812	350	16	x1	1/2
3	750	332	16	x1	2/2
4	1028	52	16	x1	2/2
5	300	90	16	x2	2/2
6	300	90	16	x2	2/2
7	278	87	16	x2	2/2
8	1028	332	16	x1	2/2
9	335	310	16	x1	2/2
10	677	310	16	x2	2/2

11	754	340	16	x1	1/2
12	494	340	16	x1	1/2
13	754	340	16	x1	1/2
14	340	128	16	x2	1/2
15	1028	46	22	x1	2/2
16	1062	360	22	x1	2/2
17	288	294	2,8	x2	1/2
18	760	686	2,8	x1	1/2
19	760	344	2,8	x1	1/2
					2/2

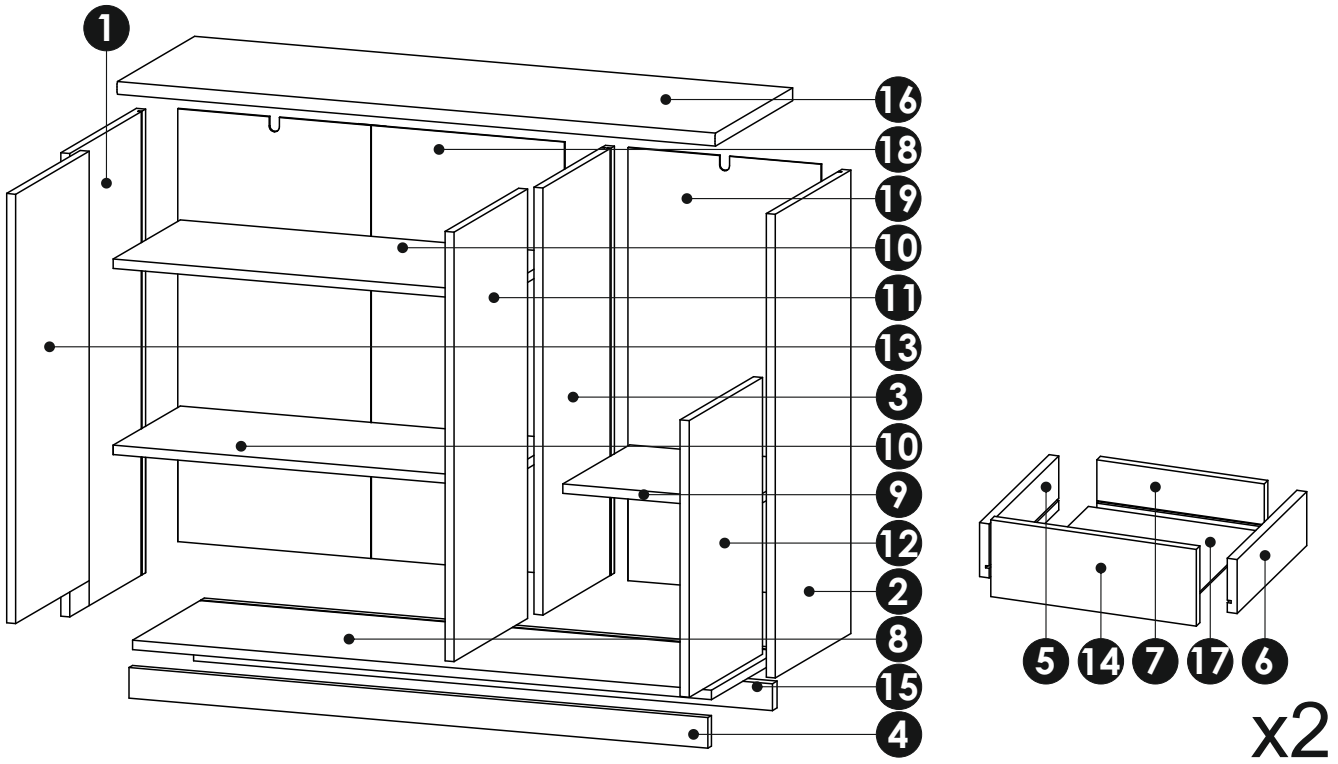

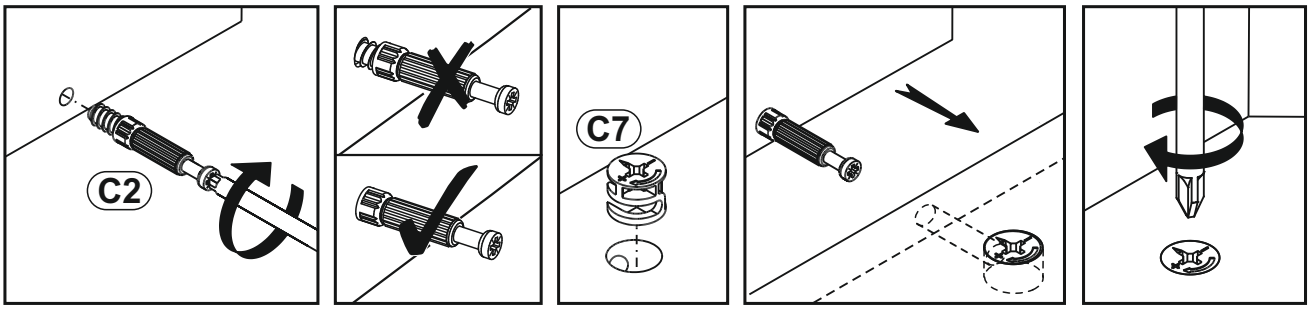

1

A0 8 x 30mm x2	C2 x2	C7 16mm x2
D0 3 x 15 mm x2	D21 5 x 13 mm x6	J6 x2
N1 L-300 x2	Q3 x2	T3 x2

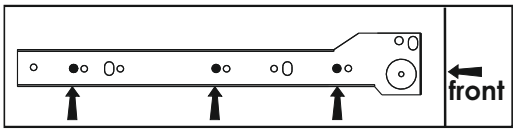

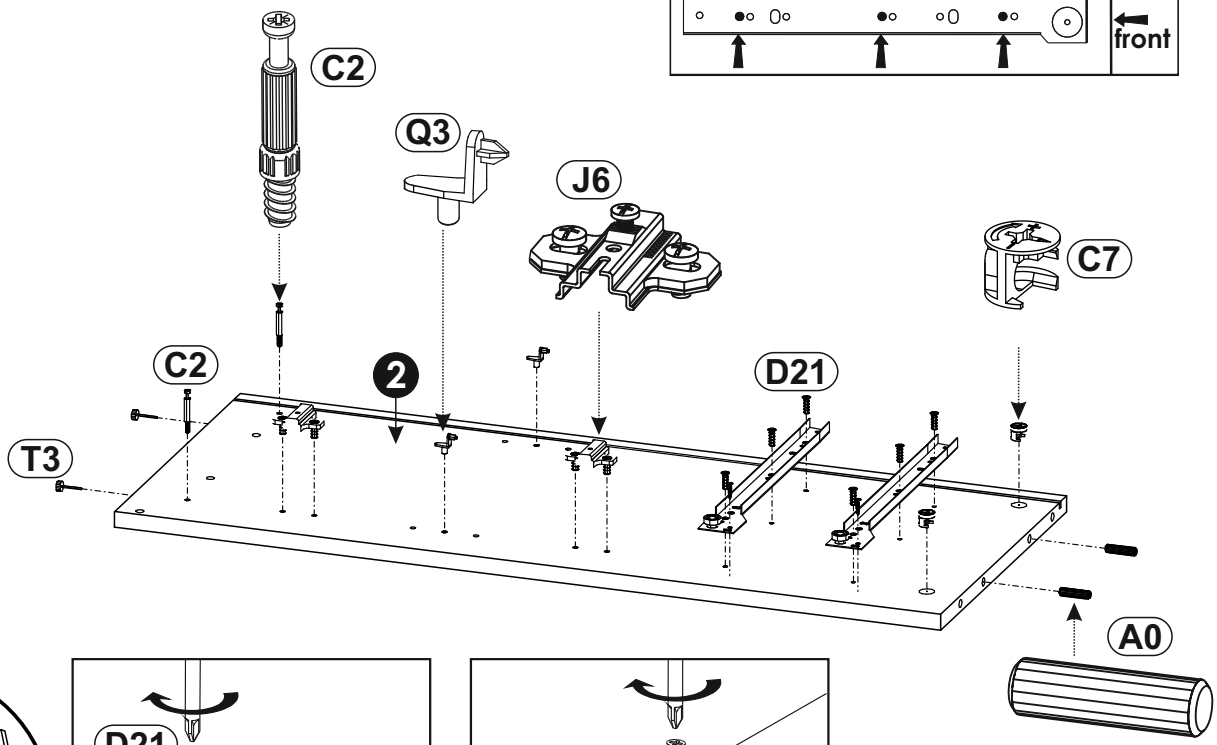

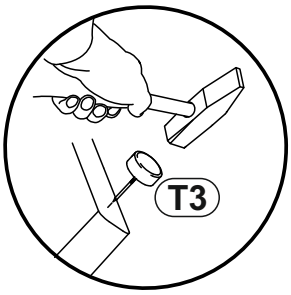

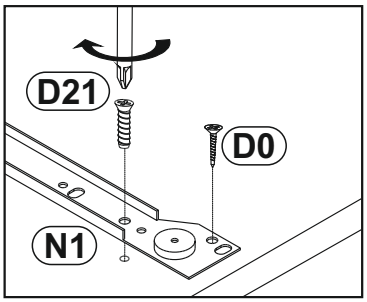

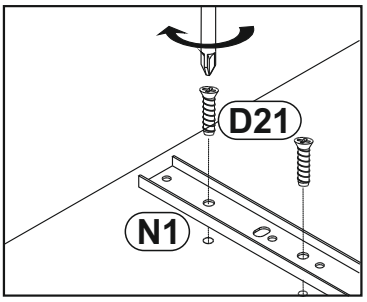

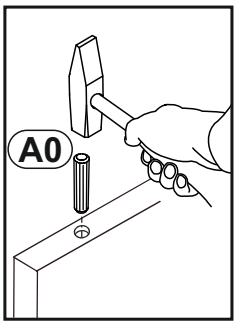

2

A0 8 x 30mm	C2	C7 16mm
J6	Q3	T3

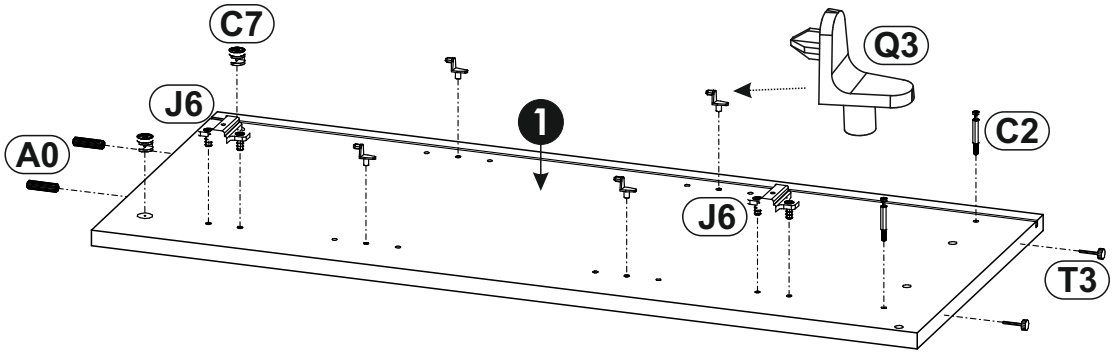

3

A0 8 x 30mm	C7 16mm	D0 3 x 15 mm
D21 5 x 13 mm	J6	
N1 L-300	Q3	

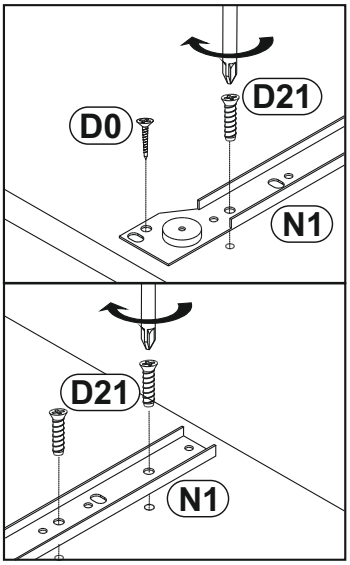

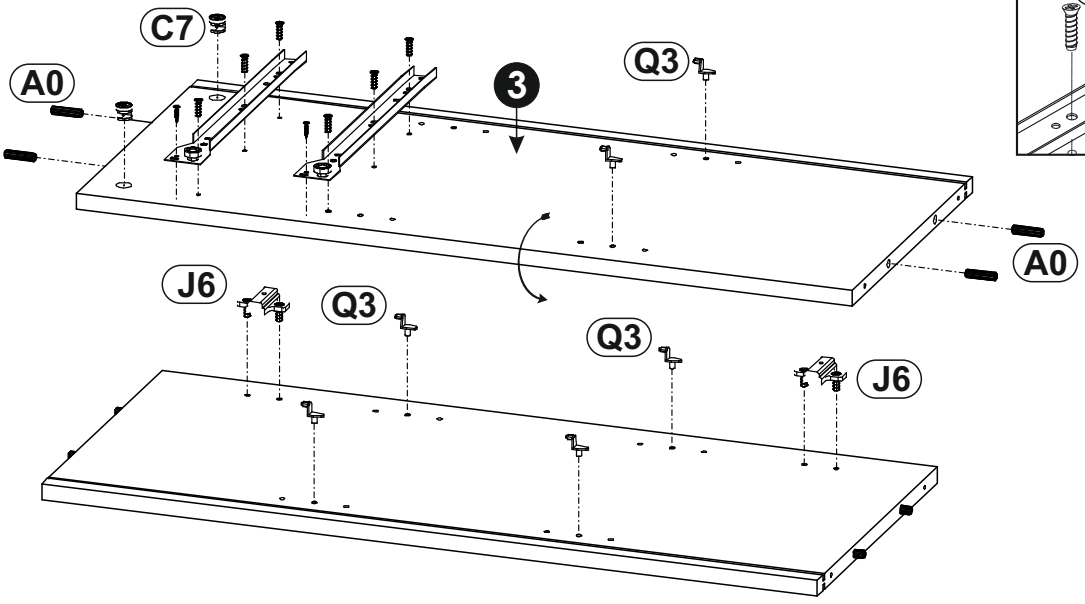

4

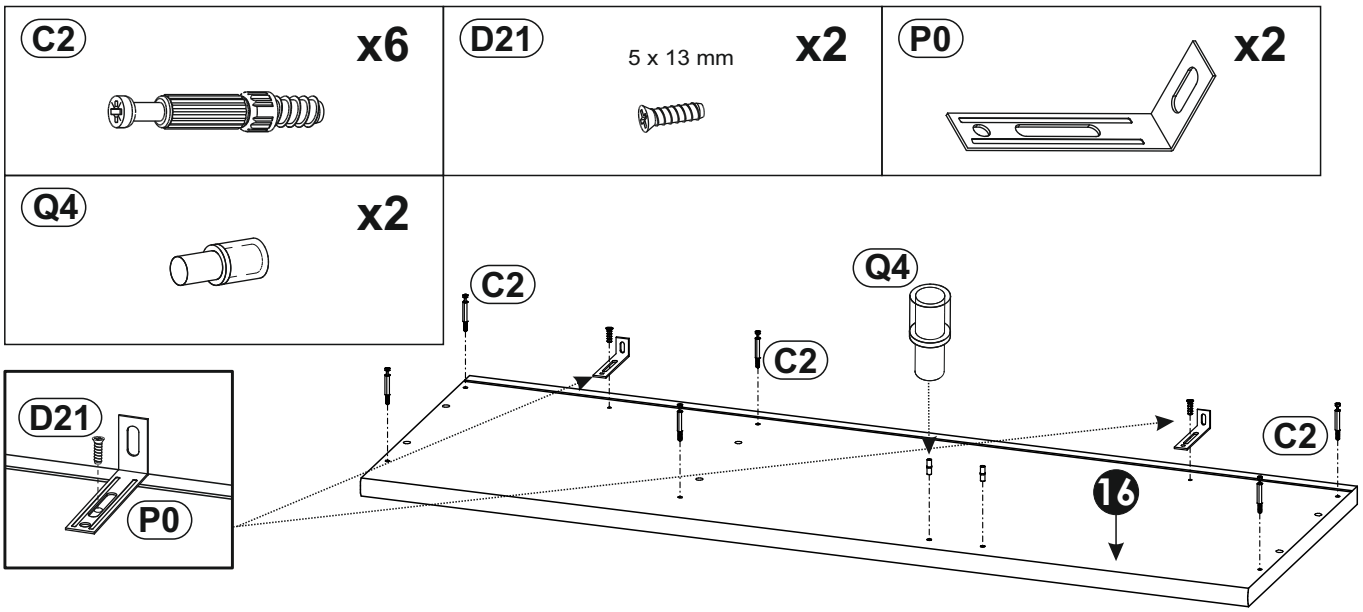
C2
x6
D21
5 x 13 mm
x2
P0
x2
Q4
x2
C2
Q4
C2
D21
P0
C2
16

5

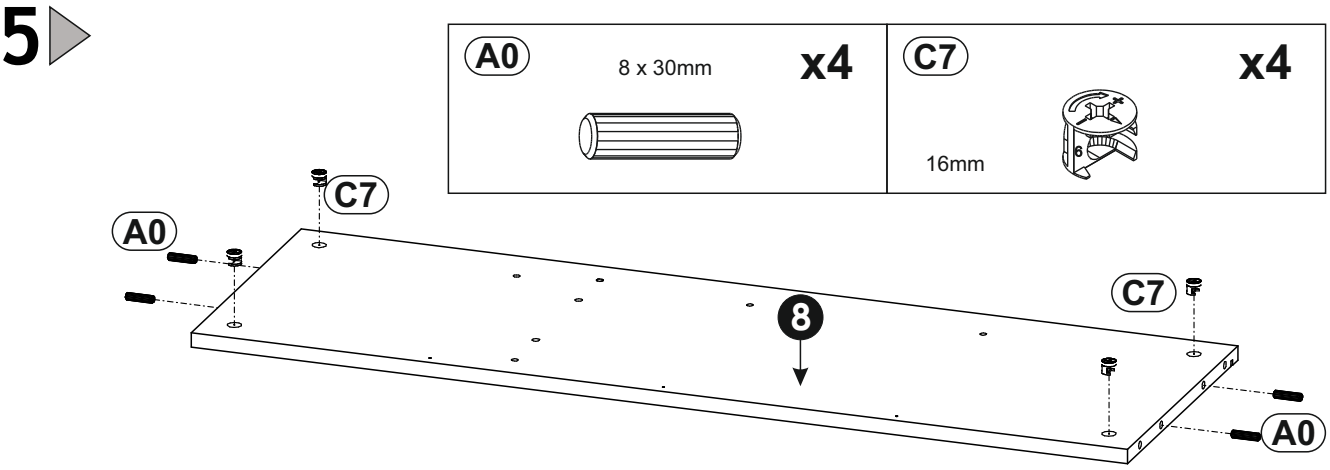
A0
8 x 30mm
x4
C7
16mm
x4
C7
A0
8
C7
A0

6

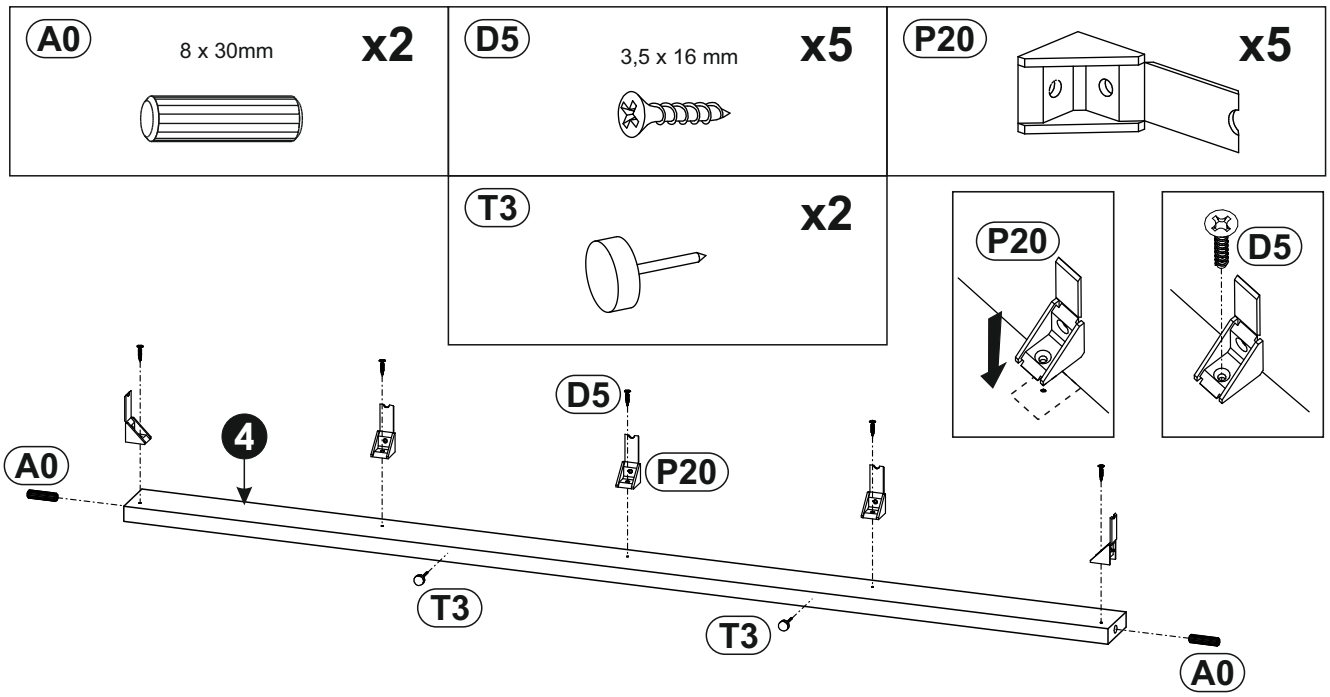
A0
8 x 30mm
x2
D5
3,5 x 16 mm
x5
P20
x5
T3
x2
P20
D5
4
D5
P20
A0
T3
T3
A0

7

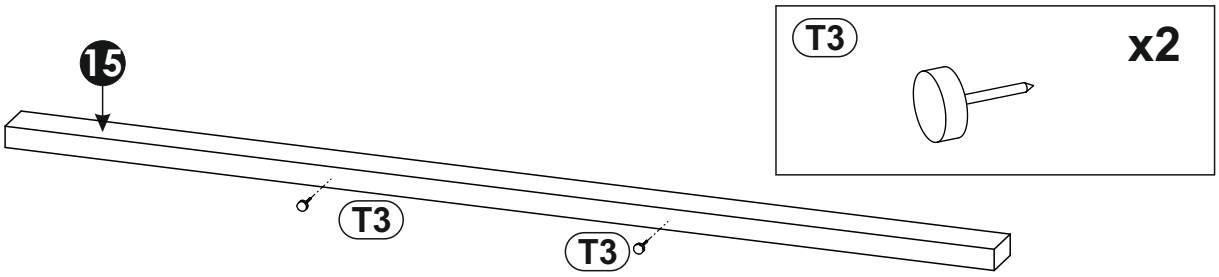
15
T3
T3
T3
x2

8

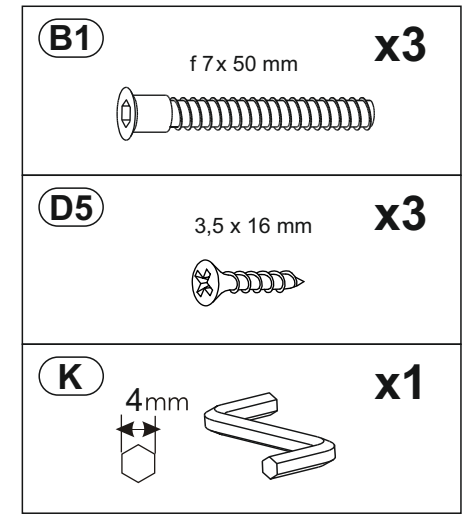
B1
f 7 x 50 mm
x3
D5
3,5 x 16 mm
x3
K
4mm
x1

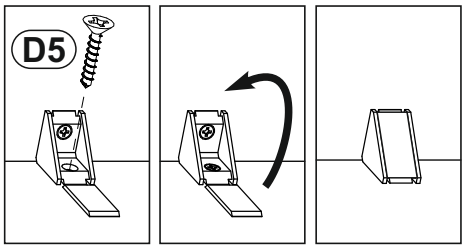
D5

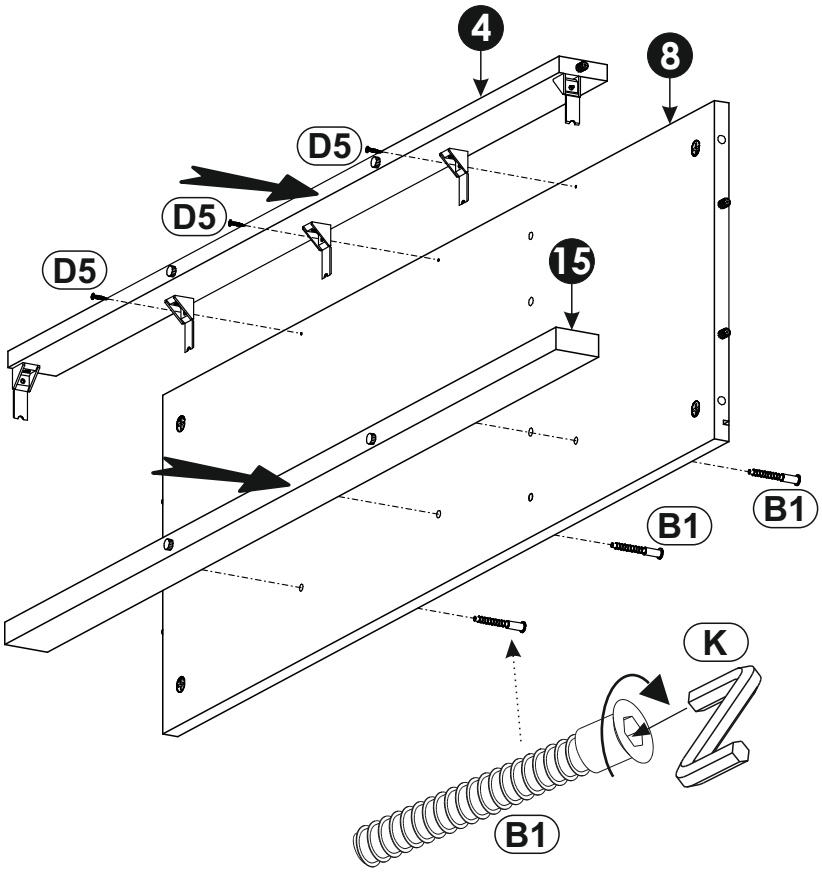
4
8
D5
D5
D5
15
B1
B1
K
B1

9

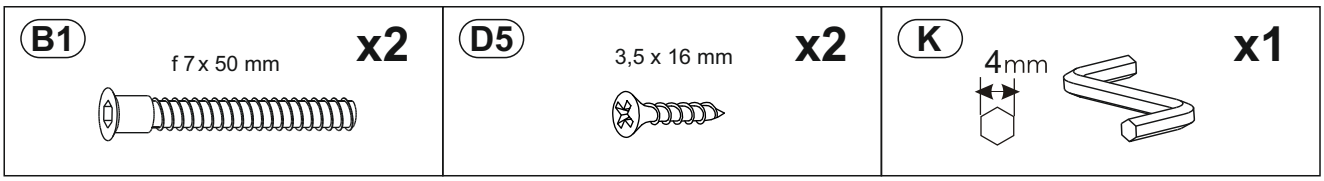
B1
f 7 x 50 mm
x2
D5
3,5 x 16 mm
x2
K
4mm
x1

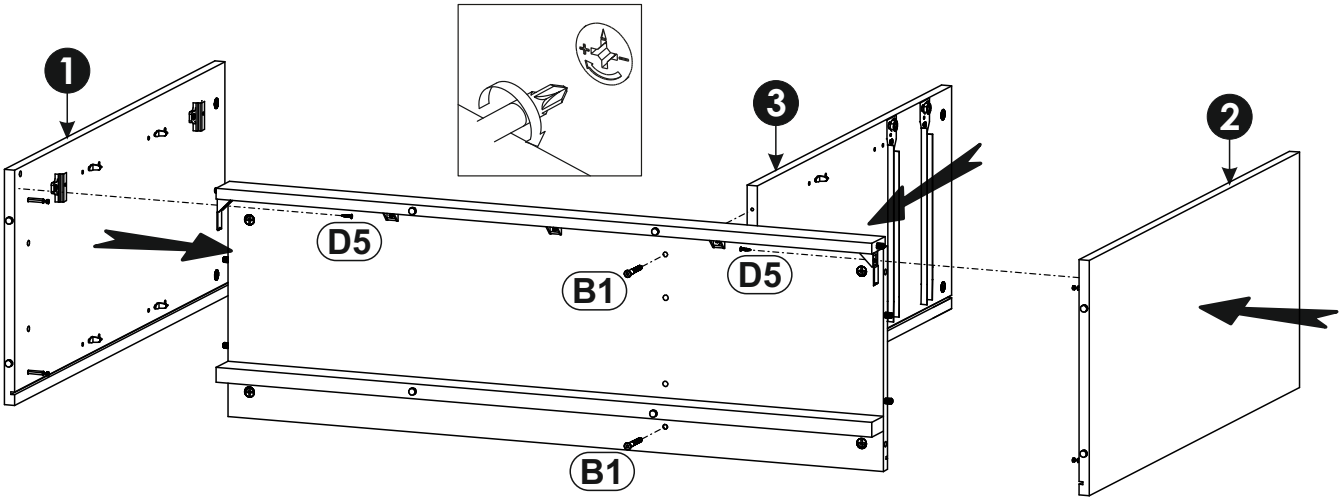
1
3
2
D5
B1
D5
B1

10

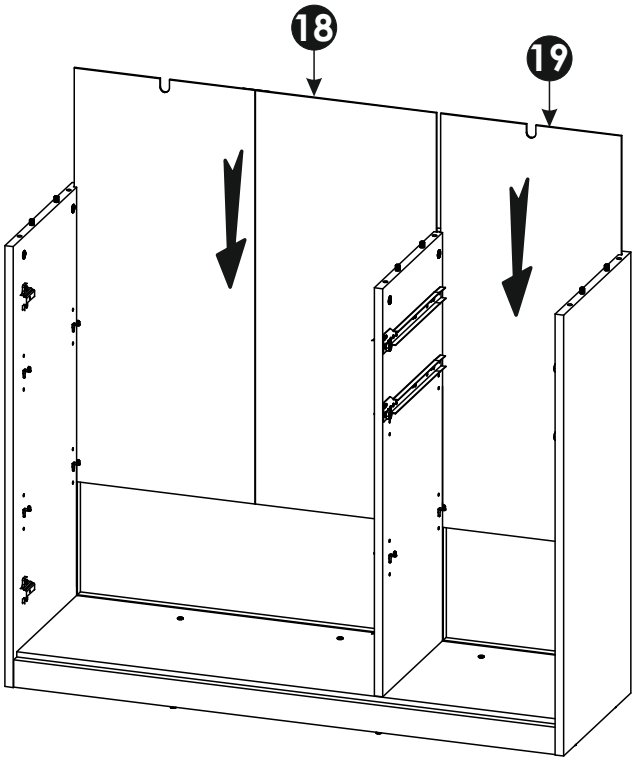

11

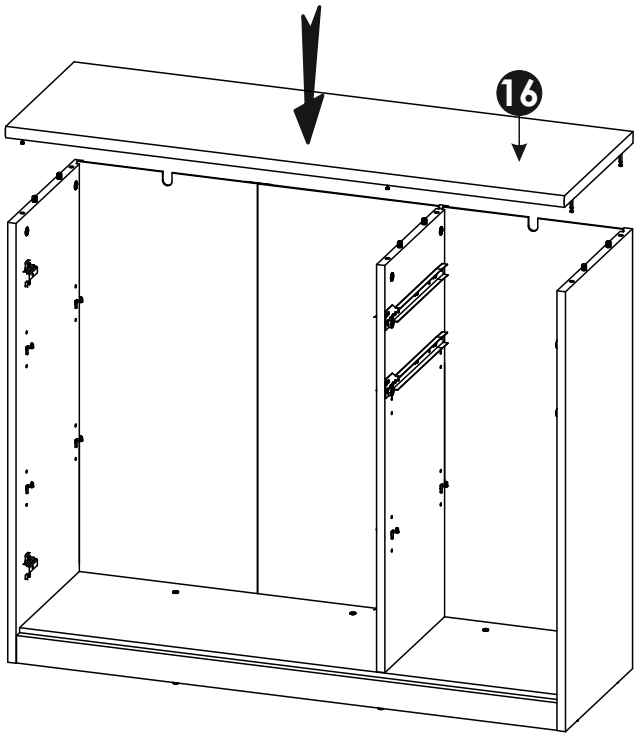

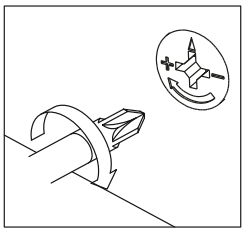

12

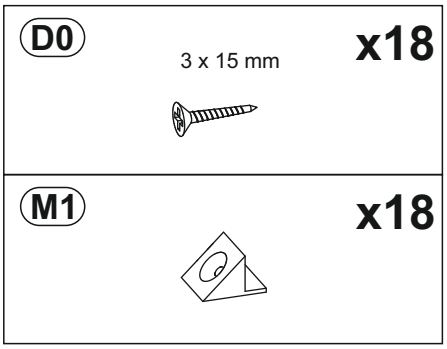

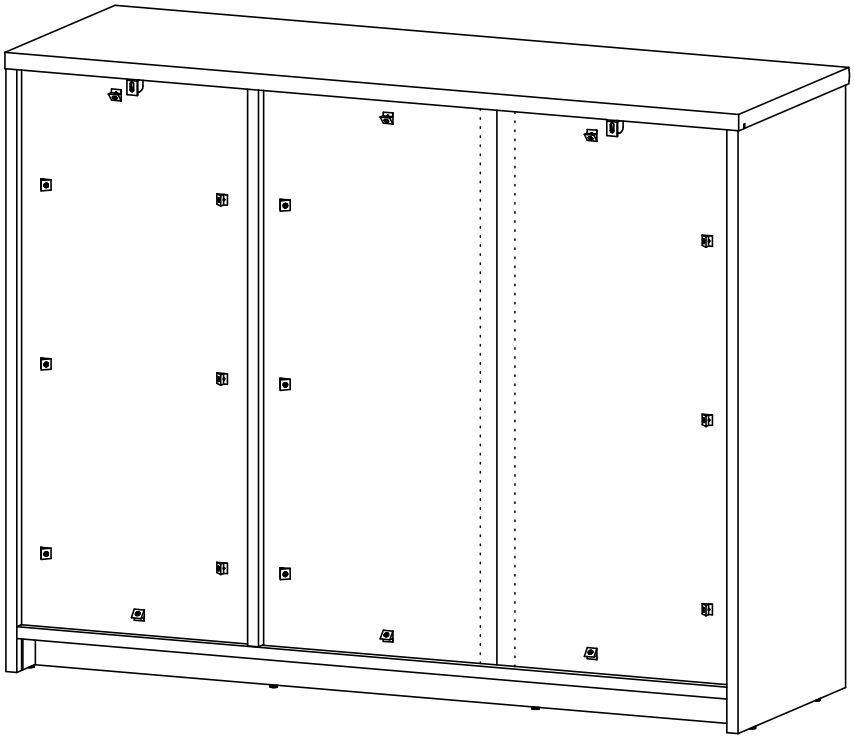

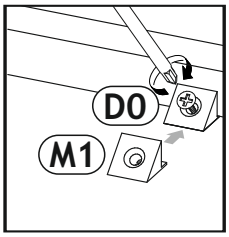

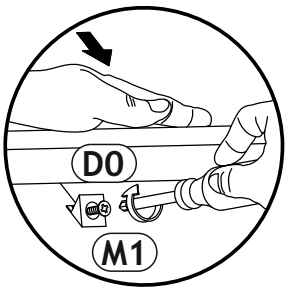

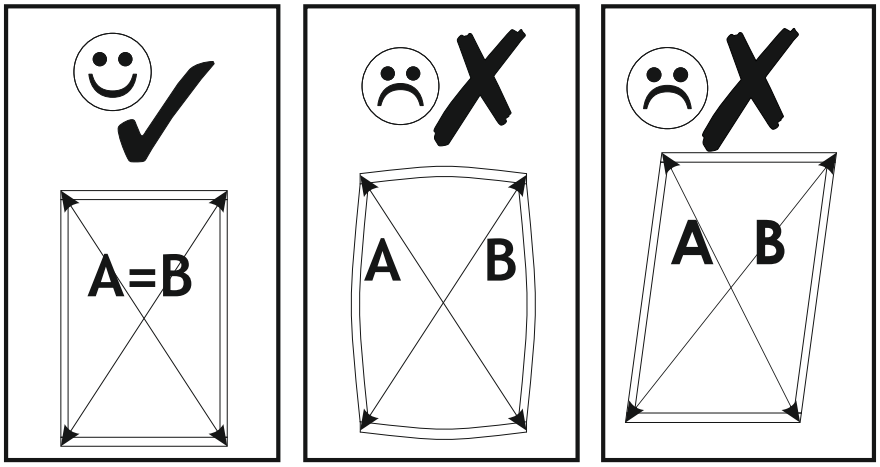

13

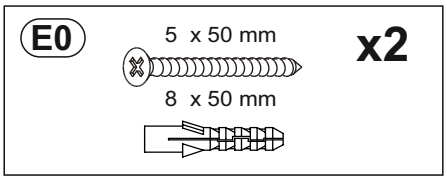

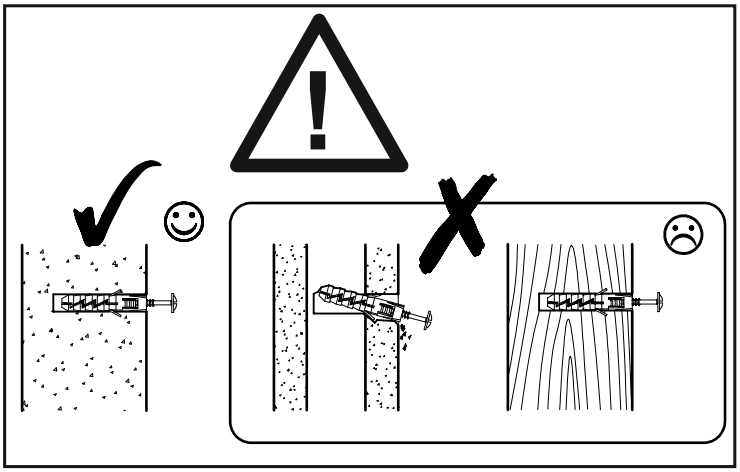

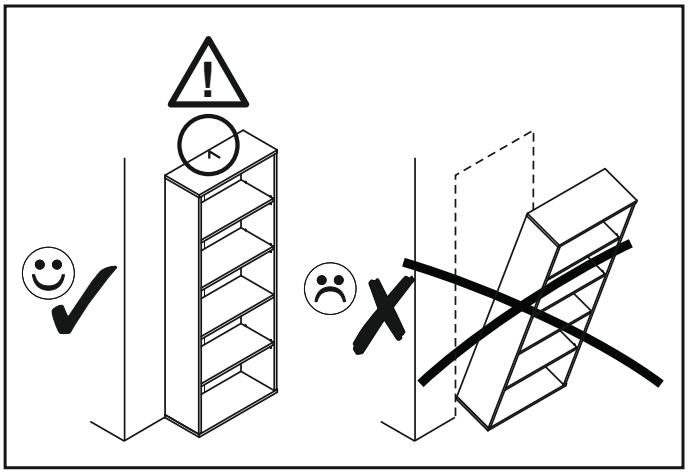

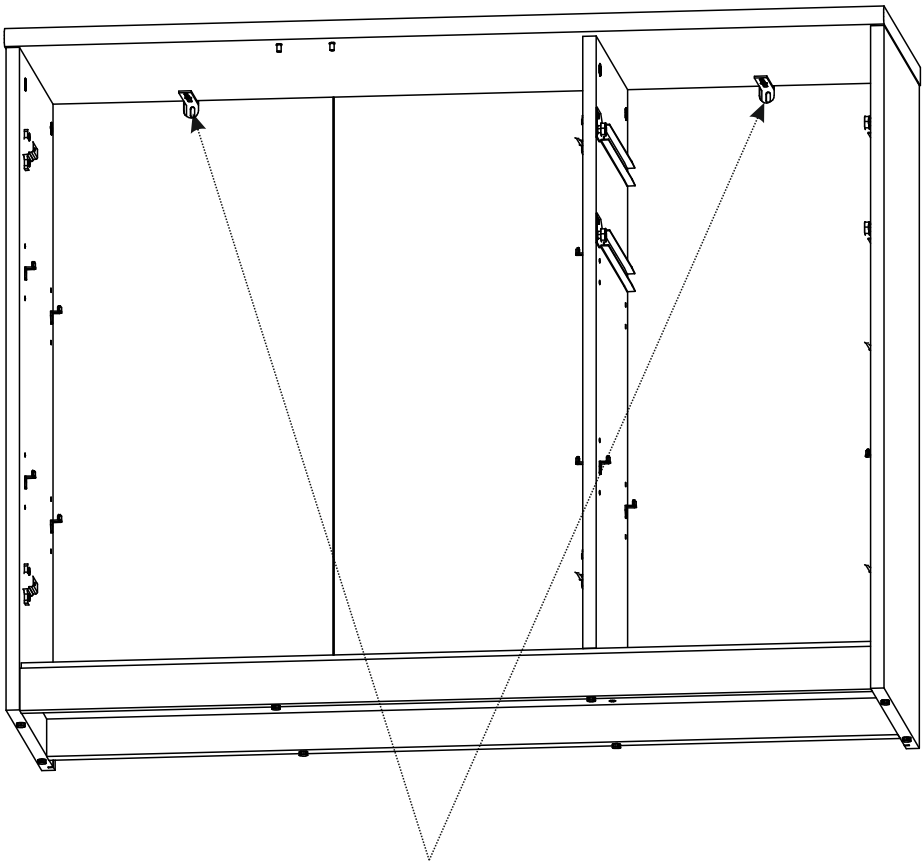

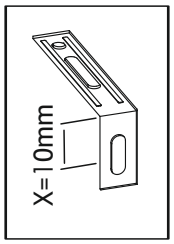

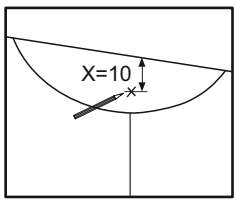

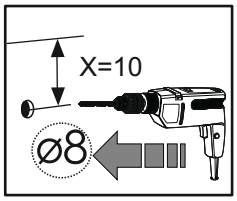

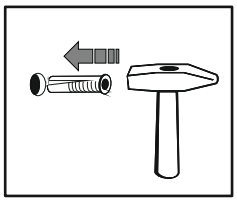

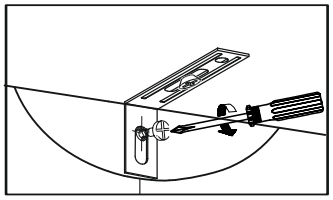

14

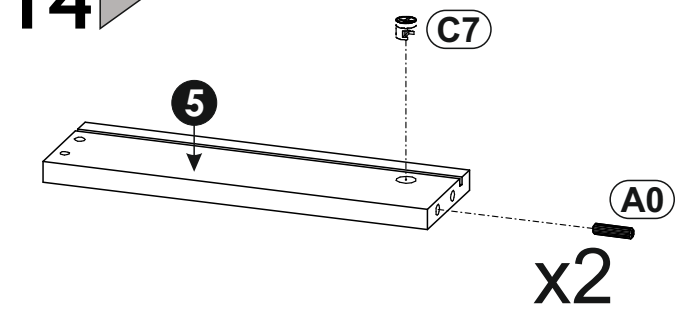

A0	8 x 30mm	x2
C7	16mm	x2

15

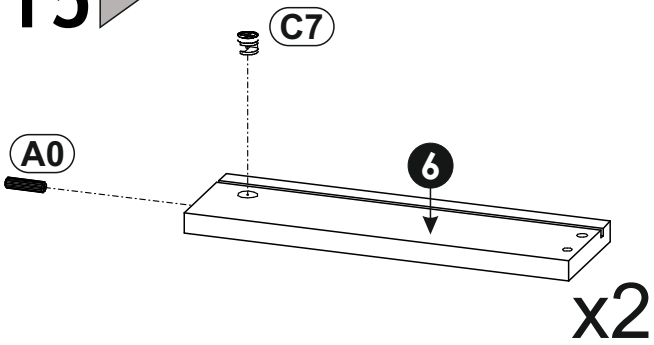

A0	8 x 30mm	x2
C7	16mm	x2

16

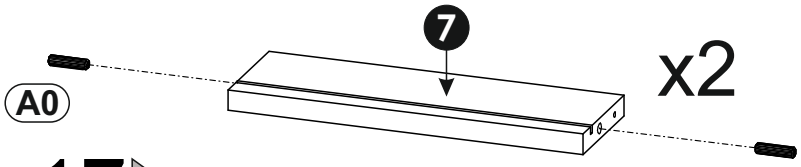

A0	8 x 30mm	x4

17

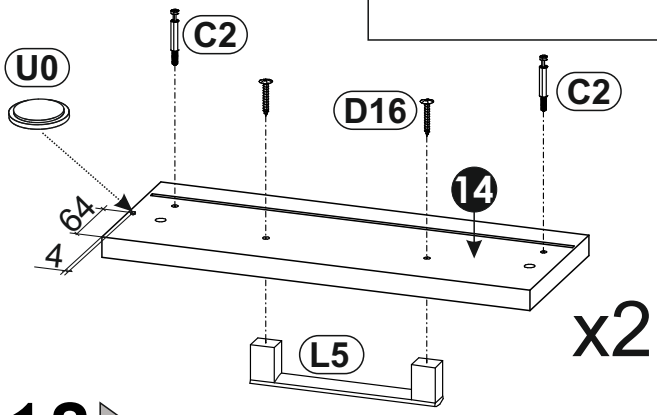

C2		x4
D16	4,2 x 28 mm	x4
L5		x2
U0		x2

18

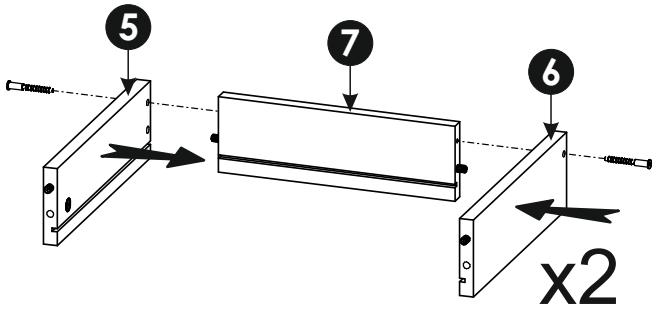

B1	f 7x 50 mm	x4
K	4mm	x1

19

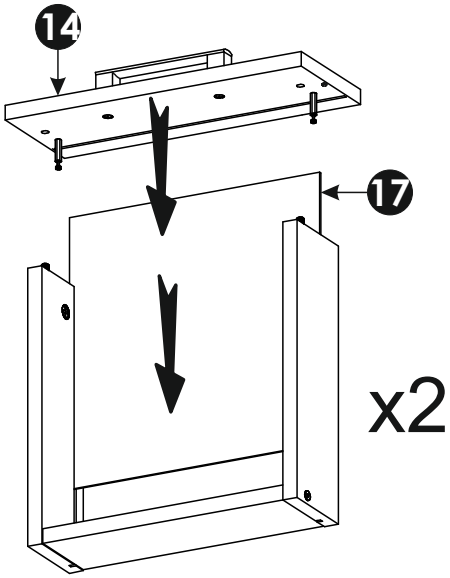

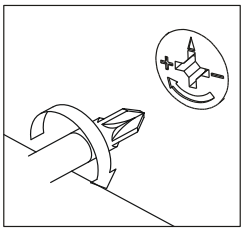

20

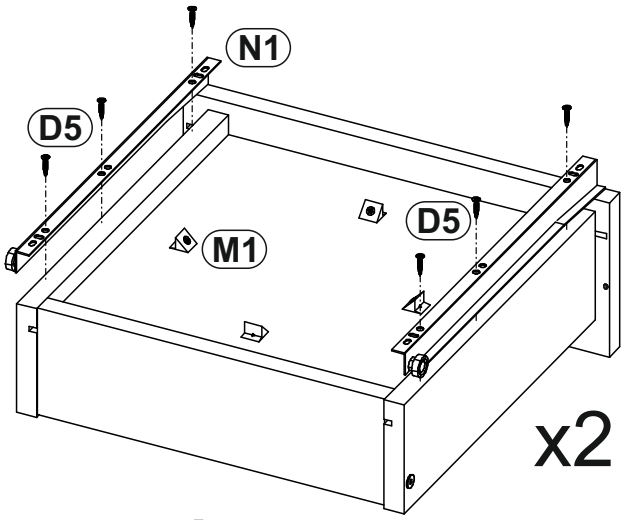

D0	3 x 15 mm	x8
D5	3,5 x 16 mm	x12
M1		x8
N1	L-300	x2

a=b

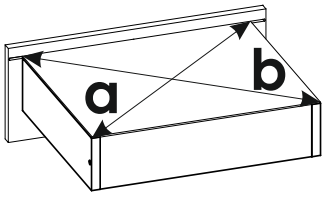

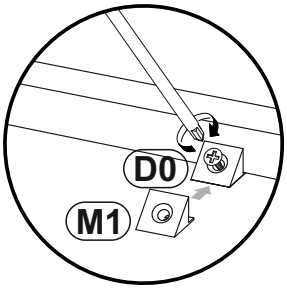

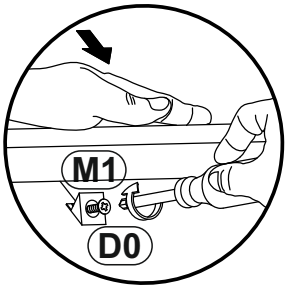

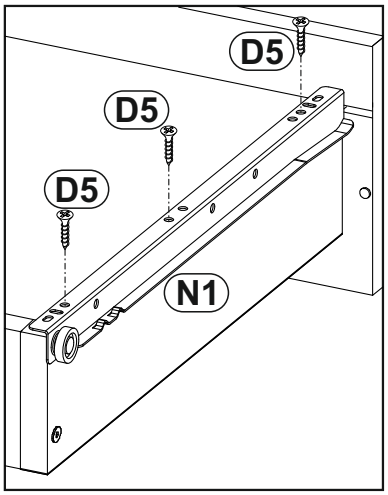

21

D10 4 x 16 mm x4	D16 4,2 x 28 mm x2	J4 x2
		L5 x1
		U0 x1

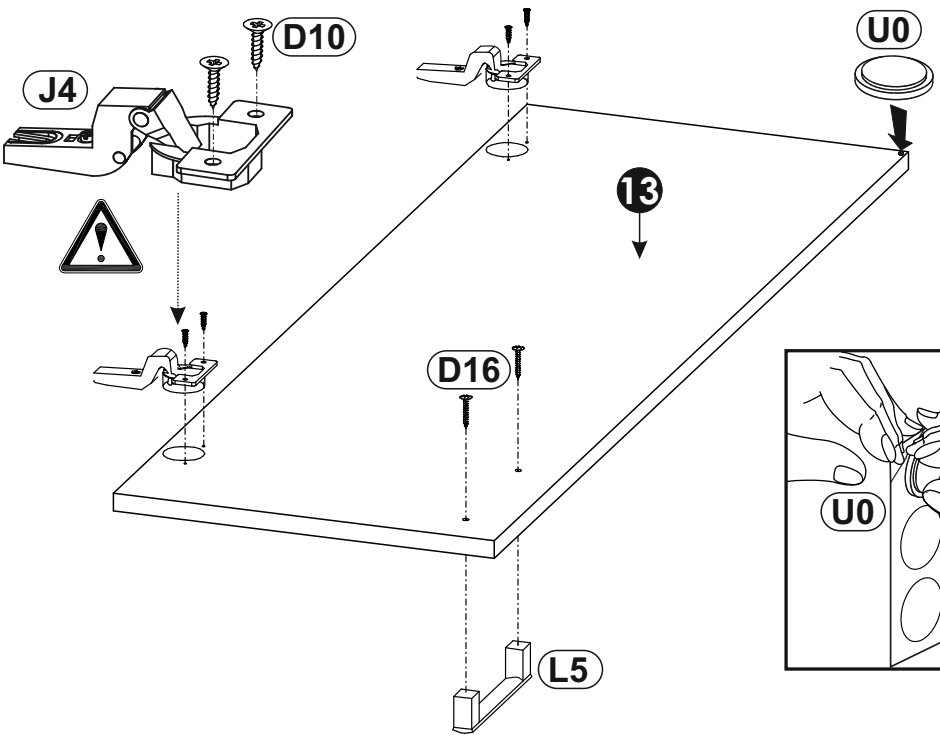

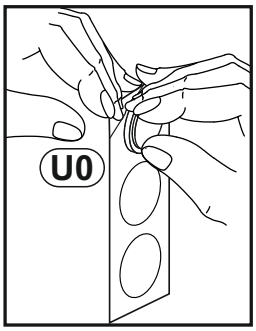

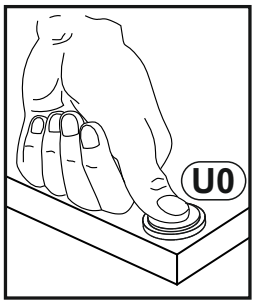

22

D10 4 x 16 mm x4	D16 4,2 x 28 mm x2	J5 x2
		L5 x1
		U0 x1

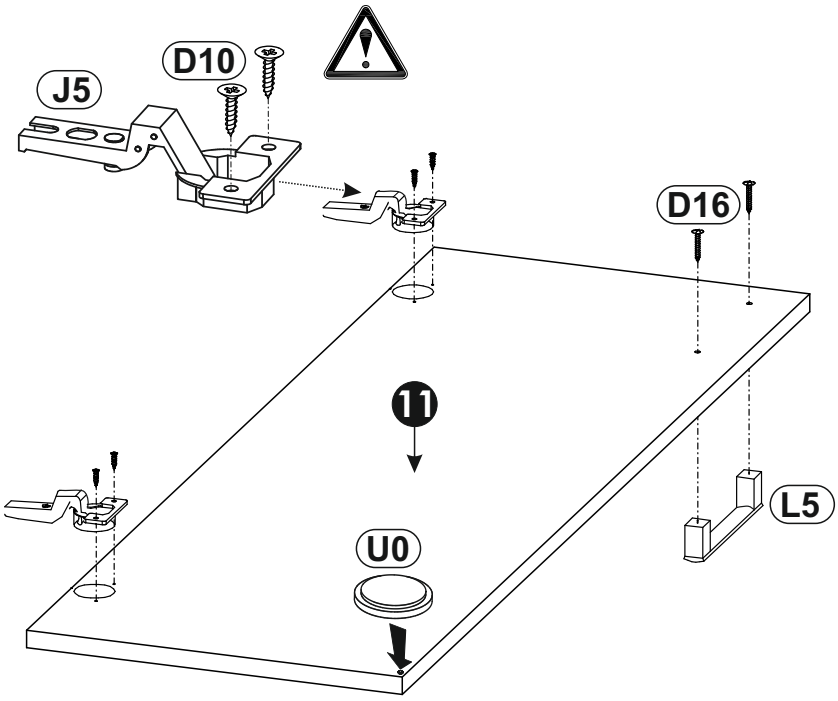

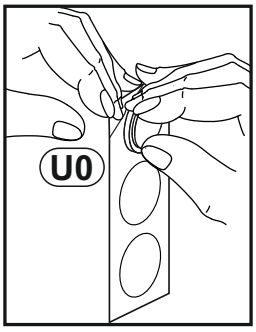

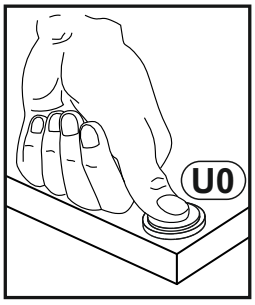

23

D10 4 x 16 mm x4	D16 4,2 x 28 mm x2	J4 x2
		L5 x1
		U0 x2

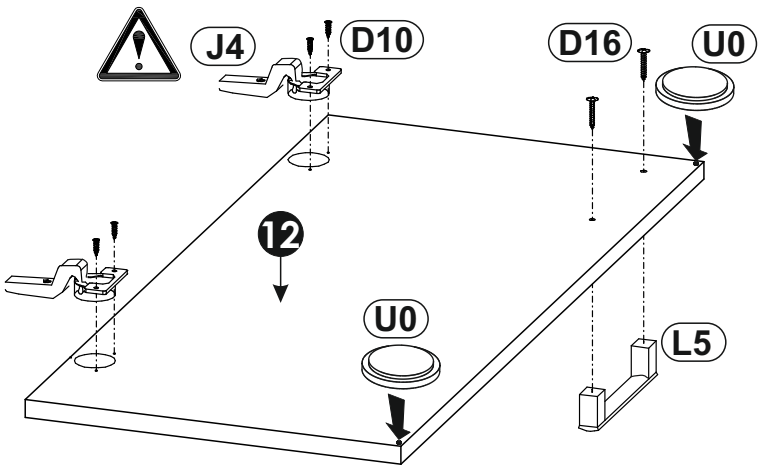

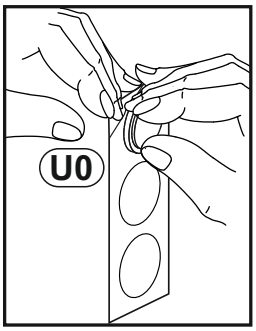

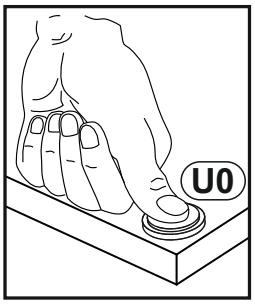

24

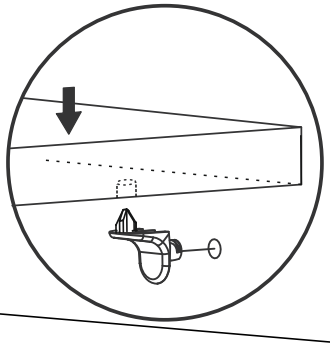

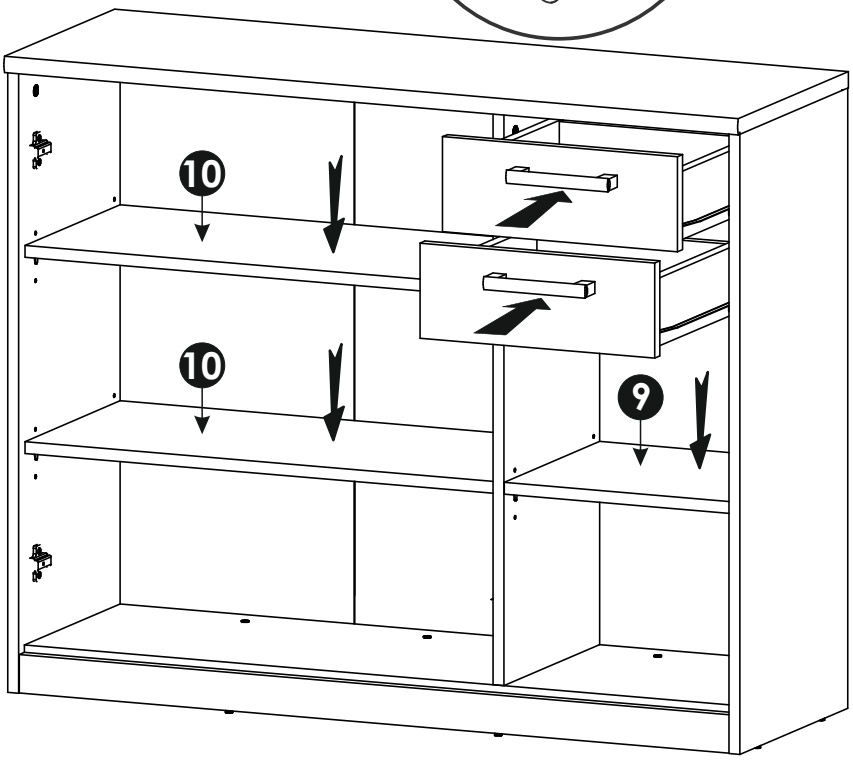

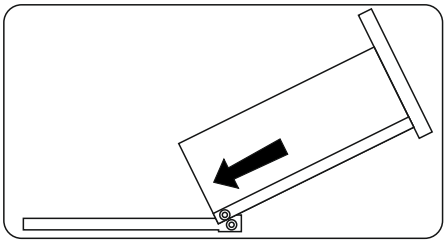

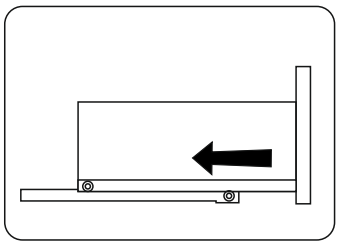

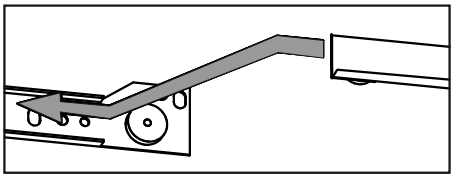

25

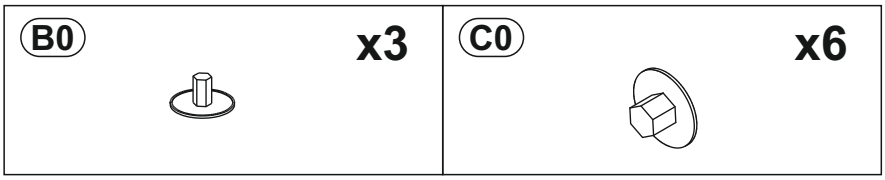

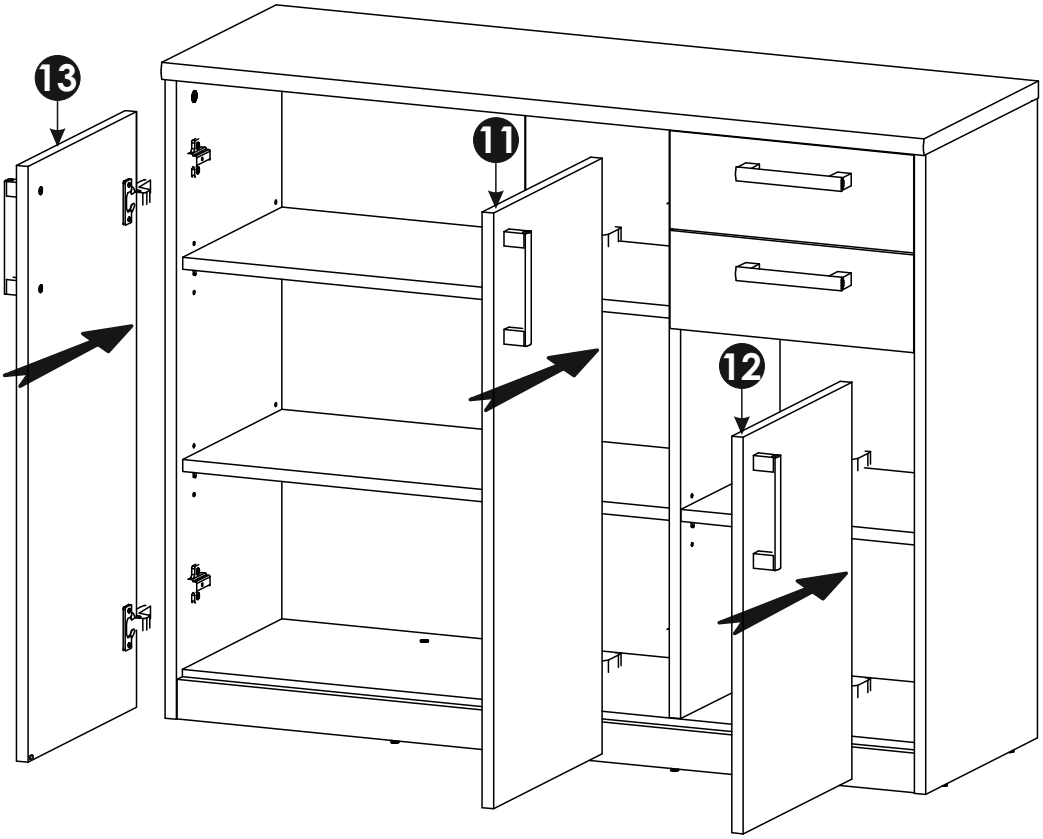

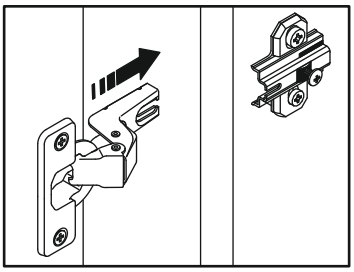

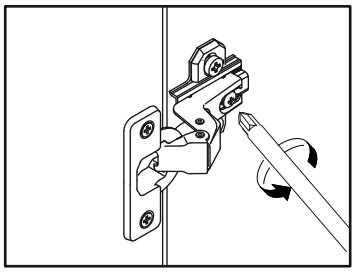

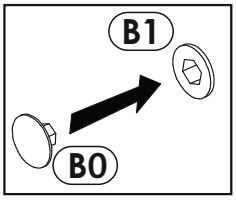

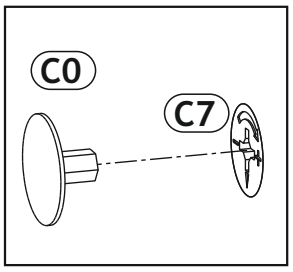

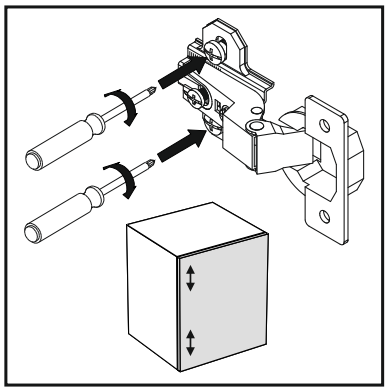

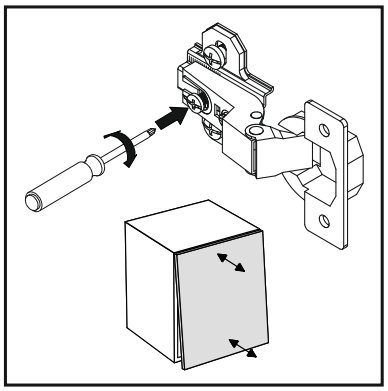

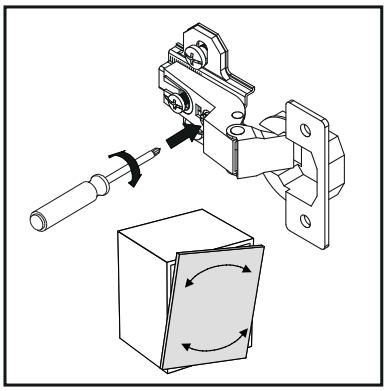

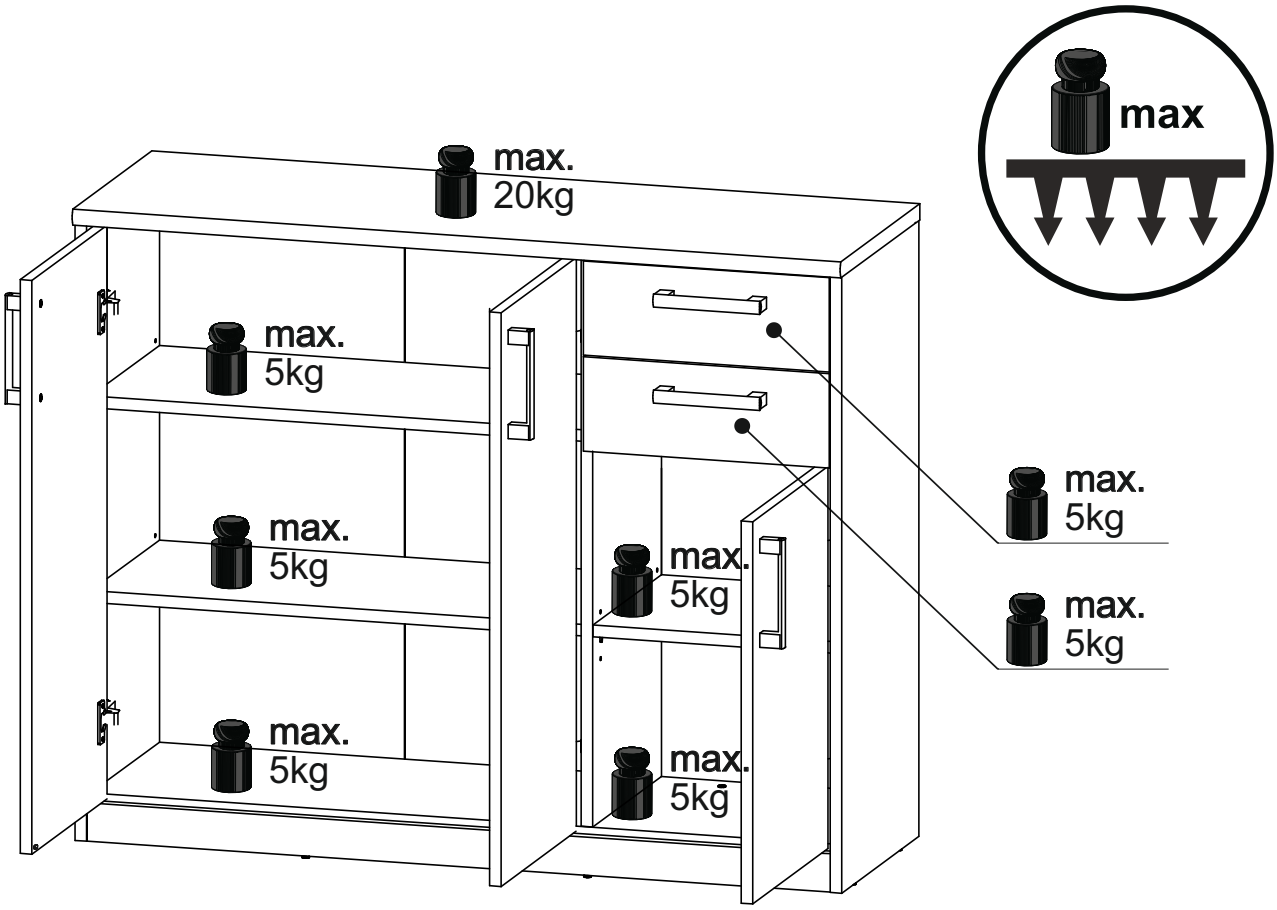
max
max.
20kg
max.
5kg
max.
5kg
max.
5kg
max.
5kg
max.
5kg
max.
5kg
max.
5kg