DXRACER

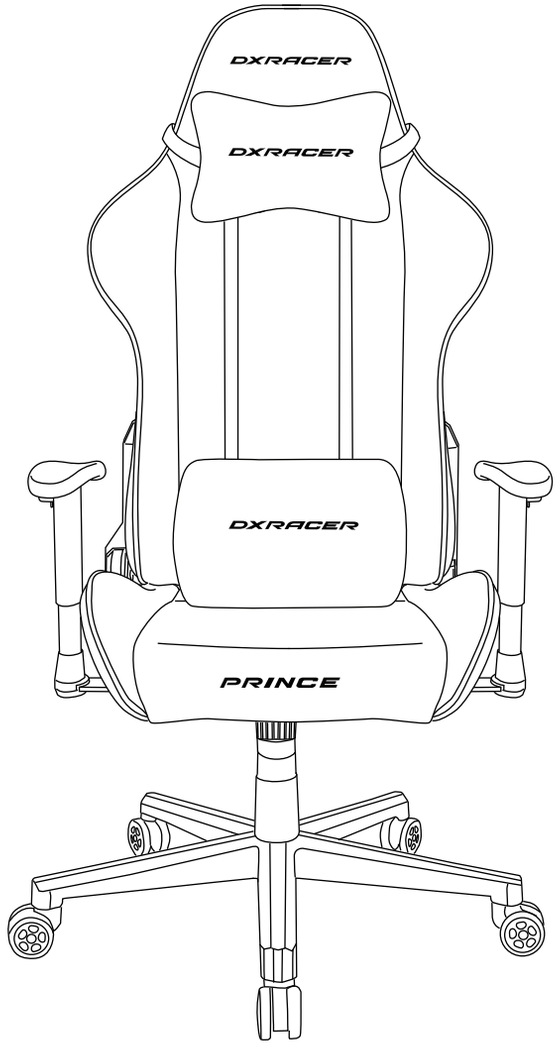

Parts List

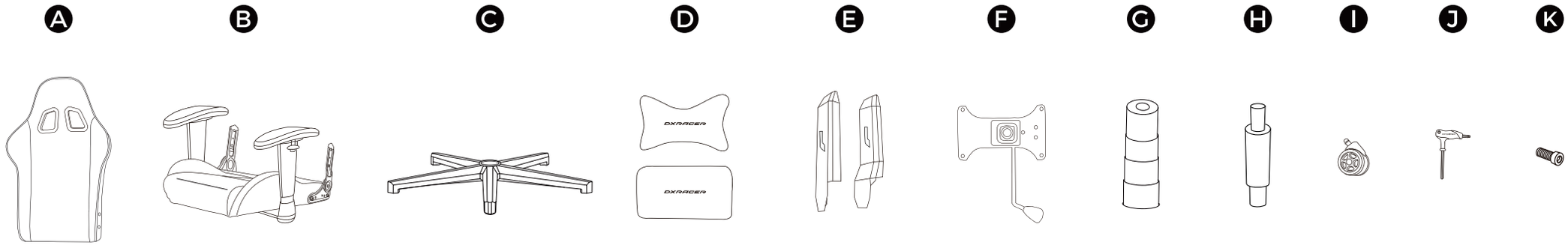

A	B	C	D	E	F	G	H	I	J	K
×1	×1	×1	×1	×1	×1	×1	×1	×5	×1	×2

Assembly Drawing

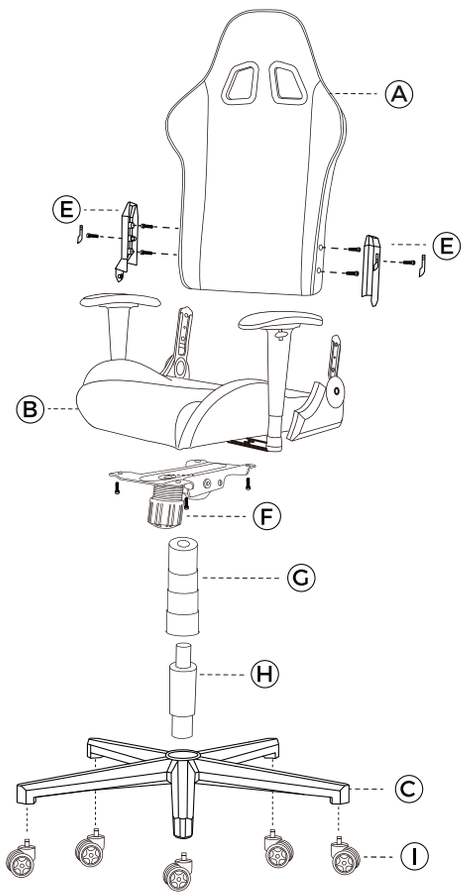

Quick Installation

step
1.

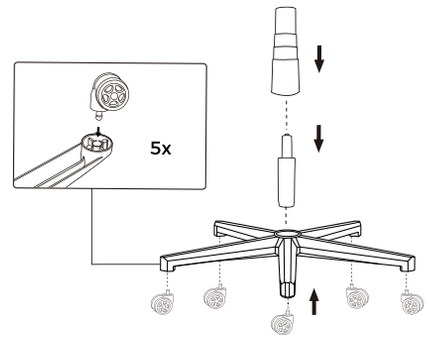

step
2.

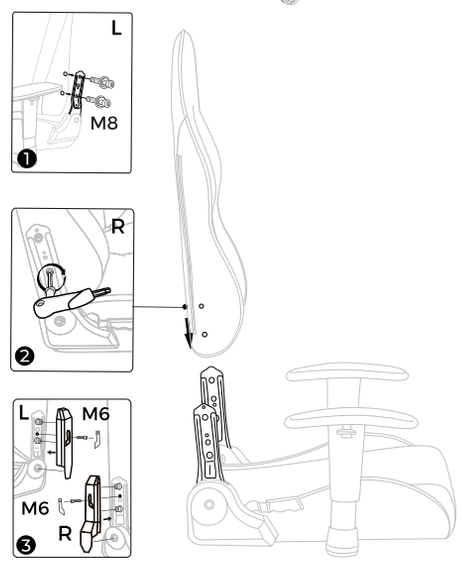

step
3.

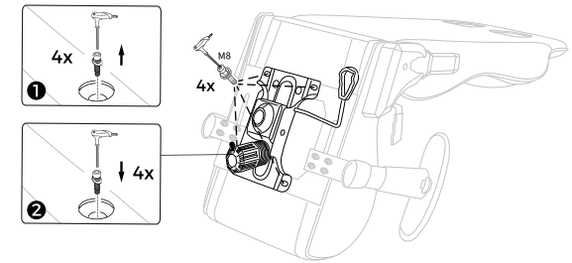

step
4.

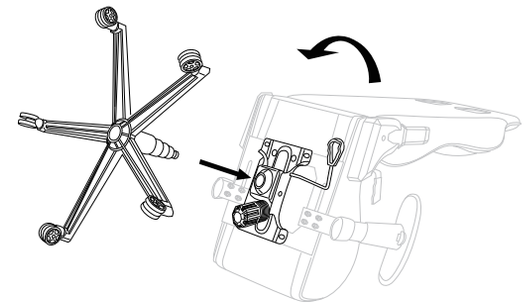
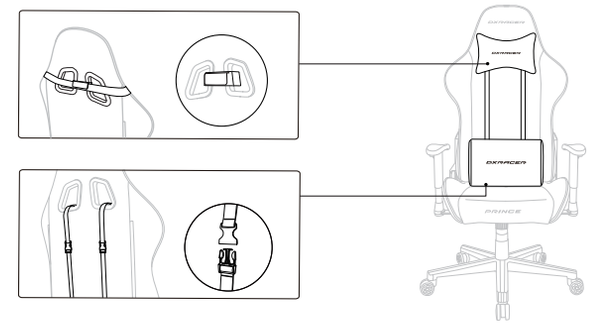
step
5.