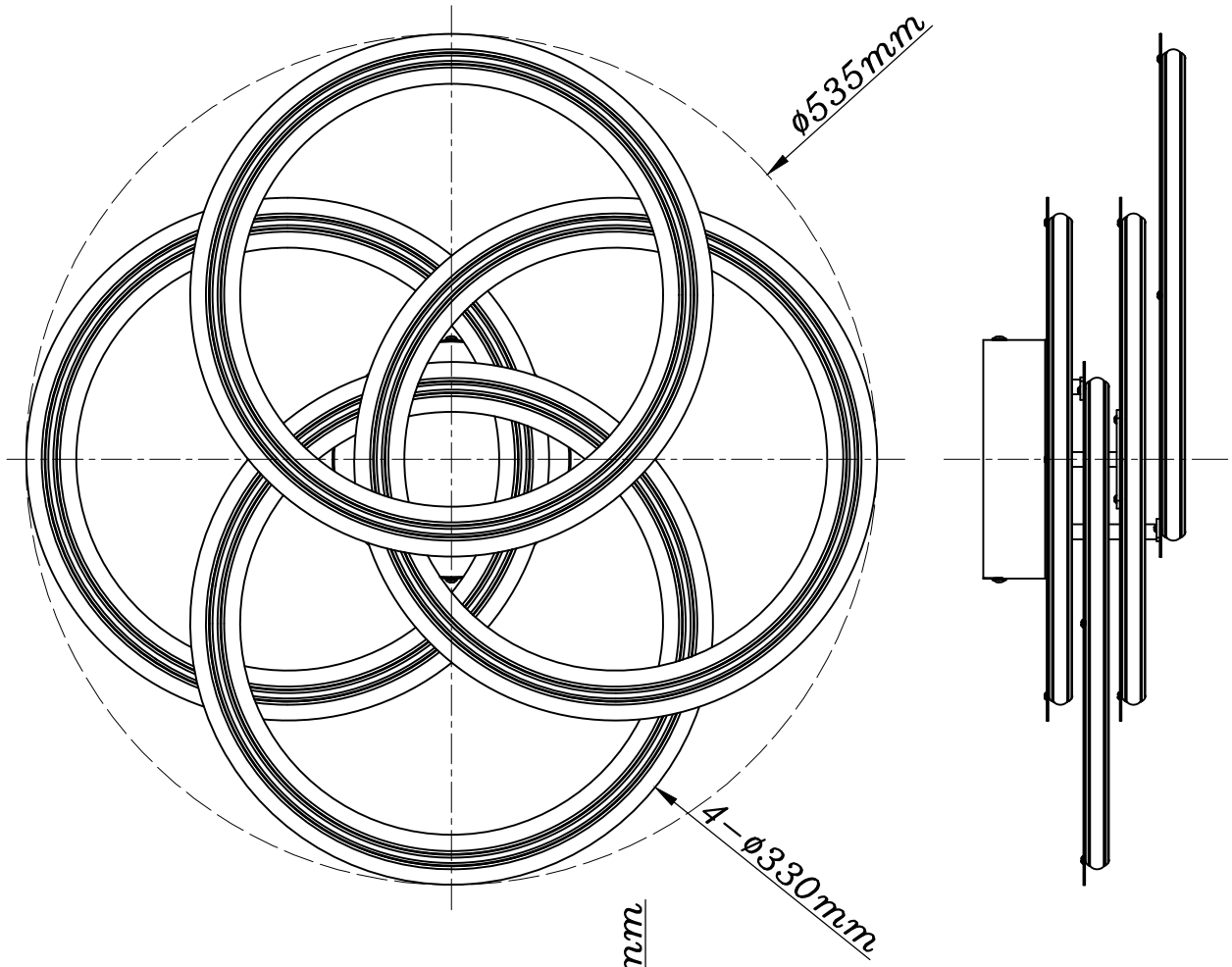

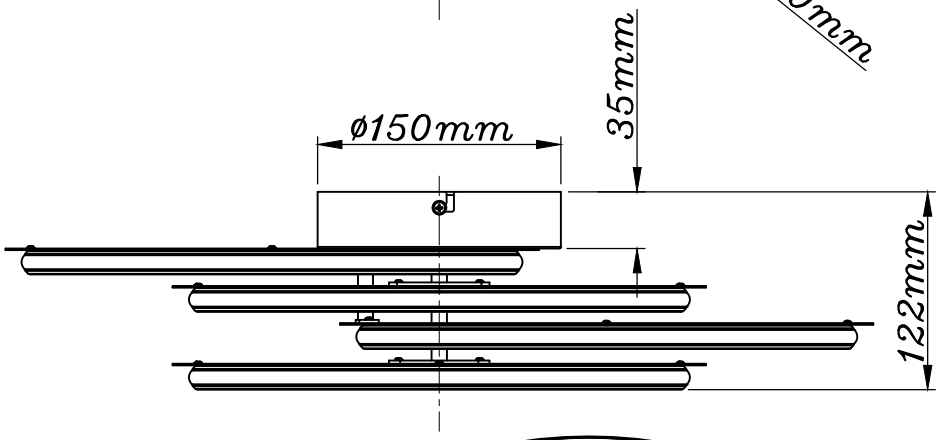

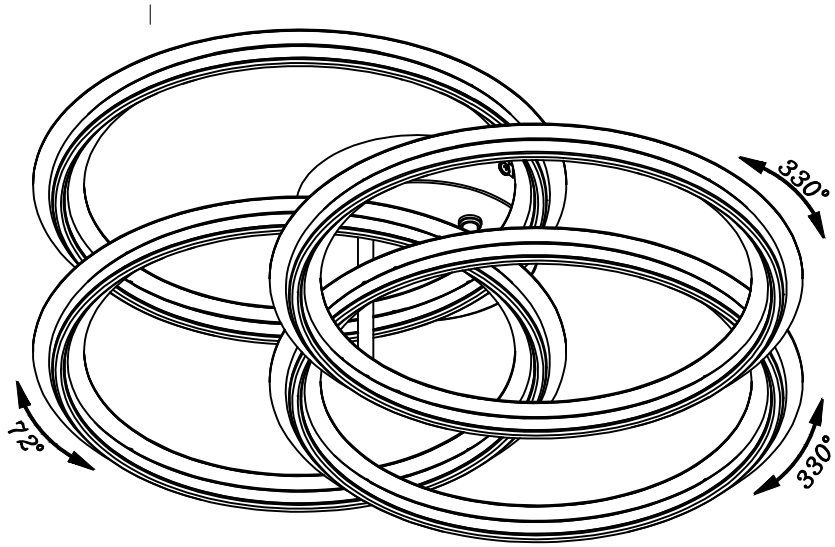

67379-55D