M2939_01

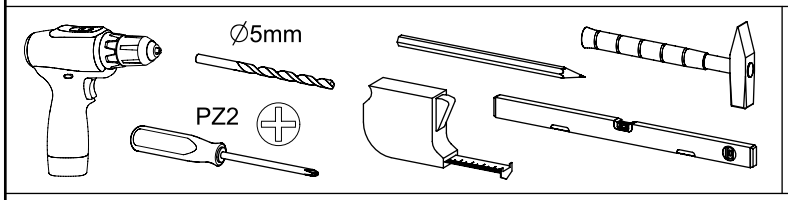
∅5mm
PZ2

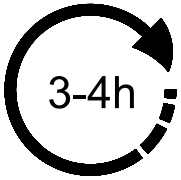
3-4h

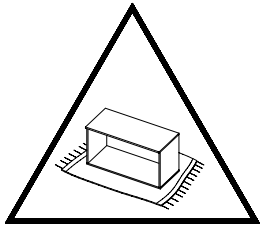

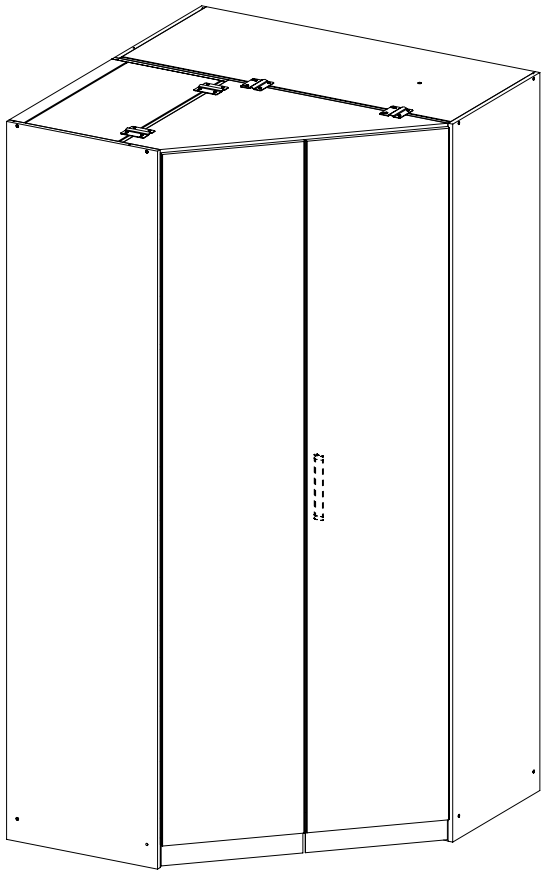

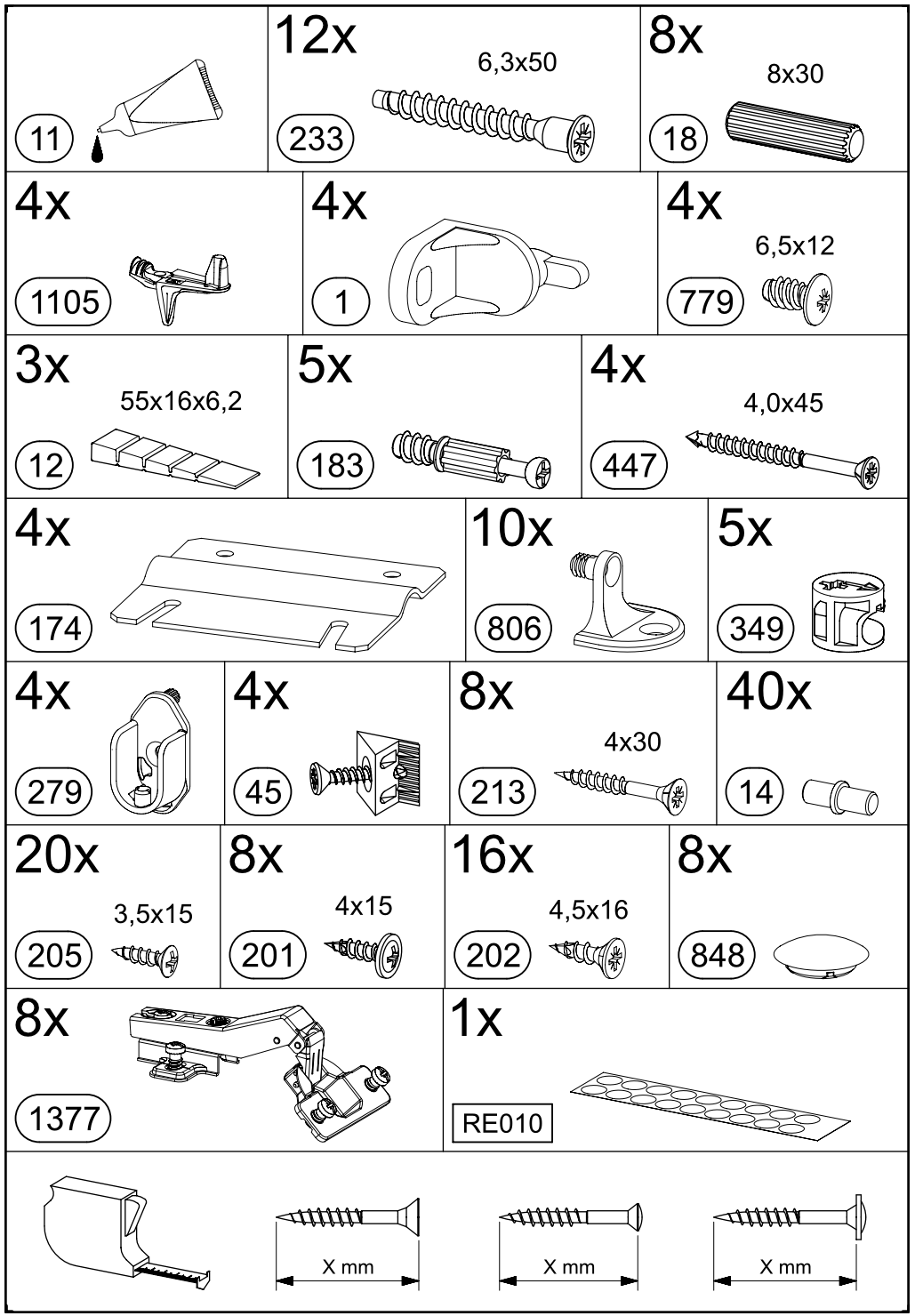
11
12x
6,3x50
233
8x
8x30
18
4x
1105
4x
1
4x
6,5x12
779
3x
55x16x6,2
12
5x
183
4x
4,0x45
447
4x
174
10x
806
5x
349
4x
279
4x
45
8x
4x30
213
40x
14
20x
3,5x15
205
8x
4x15
201
16x
4,5x16
202
8x
848
8x
1377
1x
RE010
X mm
X mm
X mm

4x 807 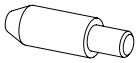	1x 4,5x50 296 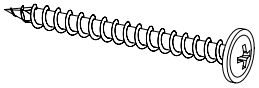	

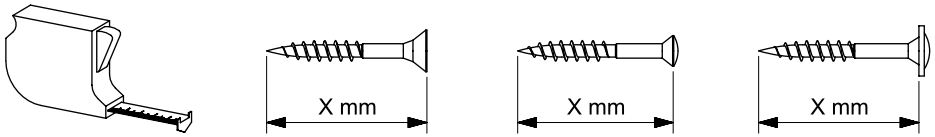

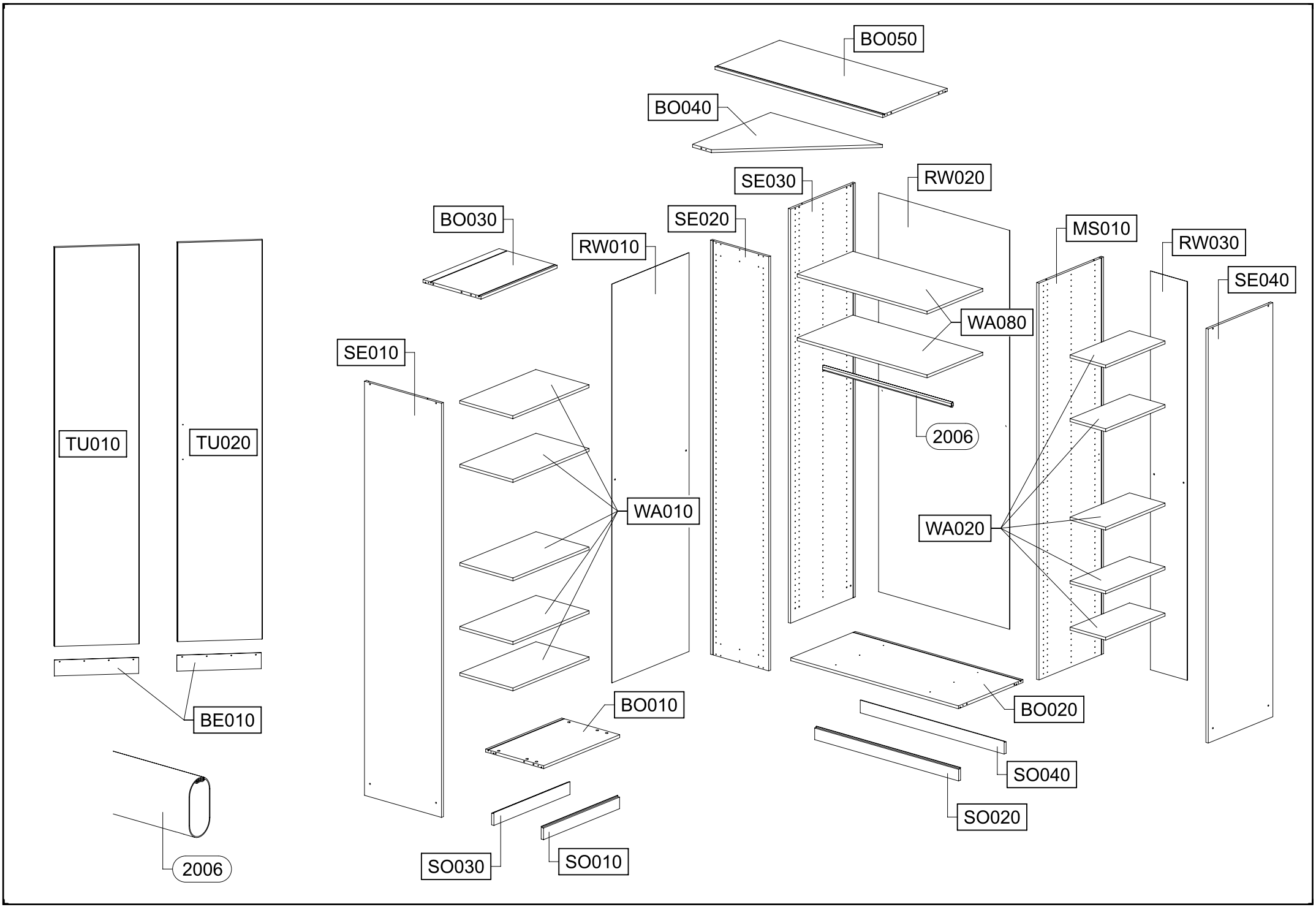
BO050
BO040
SE030
RW020
BO030
SE020
RW010
MS010
RW030
SE040
WA080
SE010
2006
TU010
TU020
WA010
WA020
BE010
BO010
BO020
SO040
SO020
2006
SO030
SO010

1

11

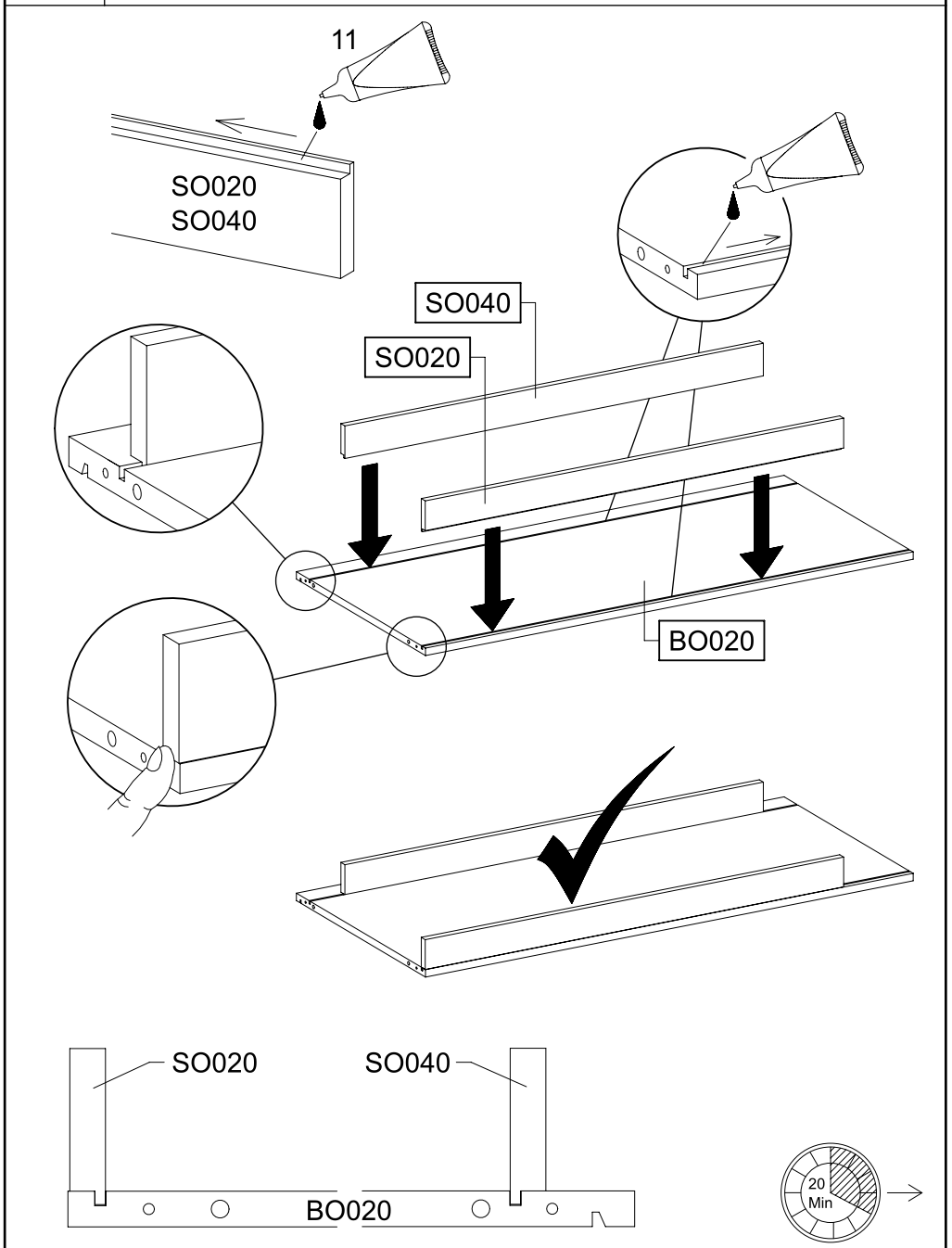
11
SO020
SO040
SO040
SO020
BO020
SO020
SO040
BO020
20
Min

2

11

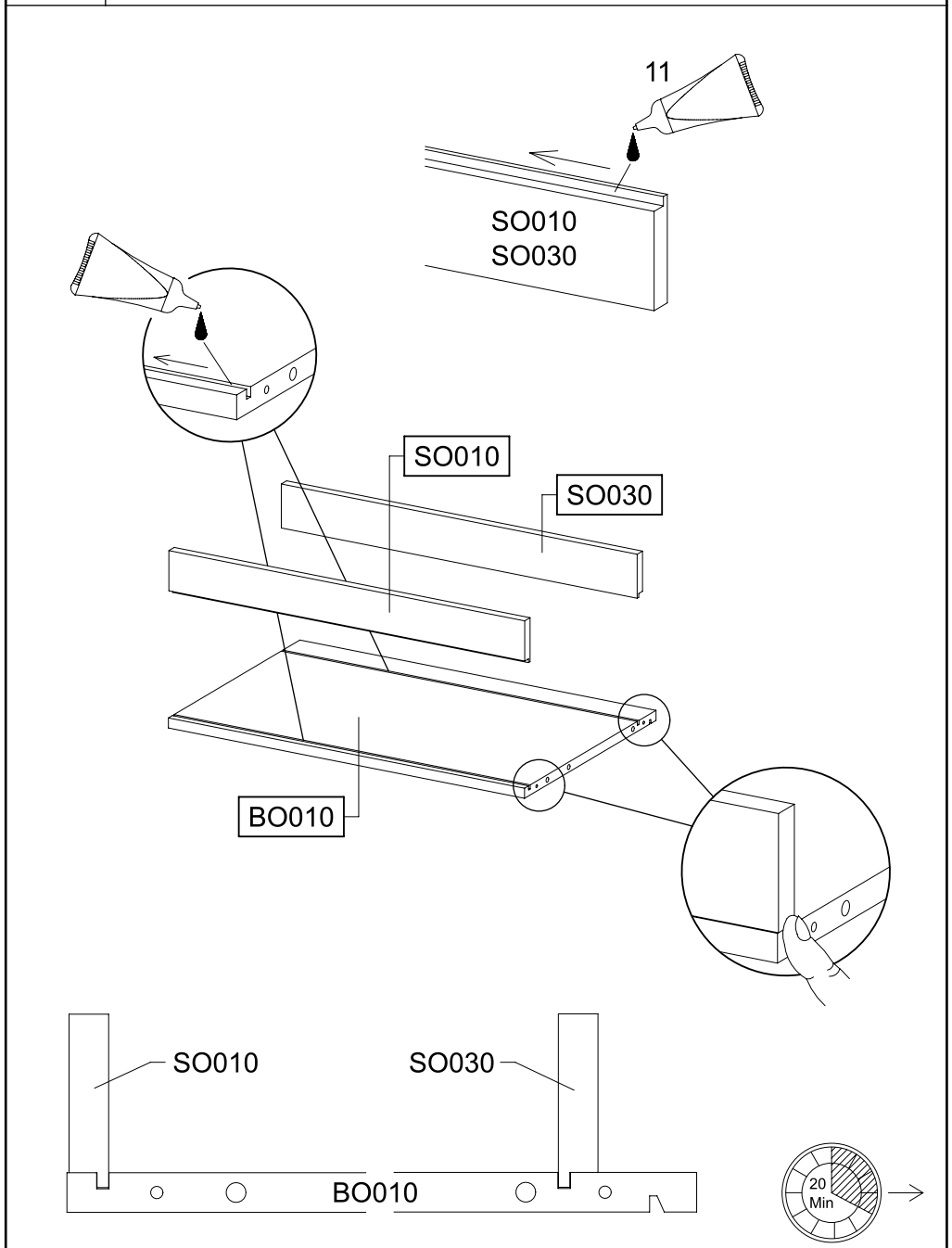
11
SO010
SO030
SO010
SO030
BO010
SO010
SO030
BO010
20
Min

3

4x 18 8x30

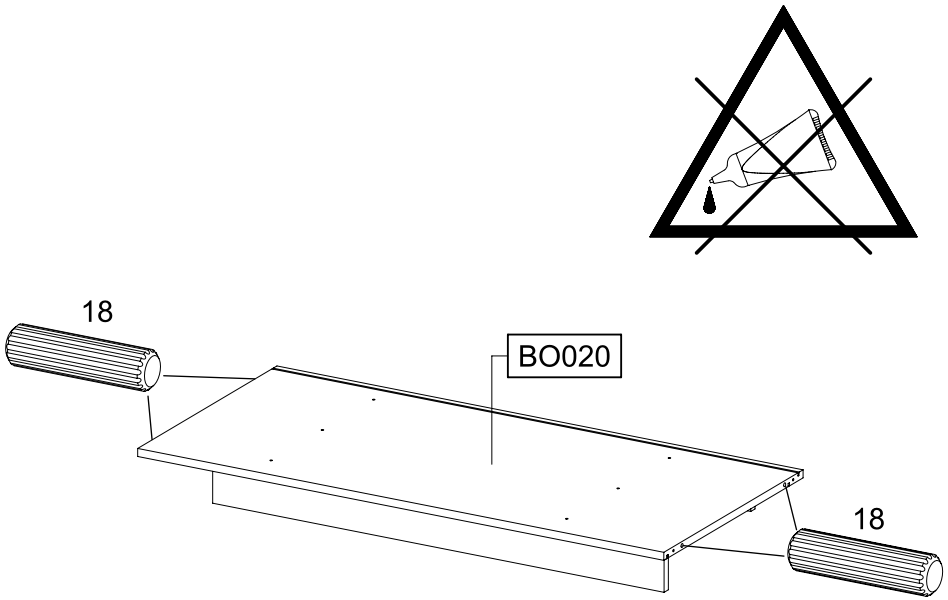

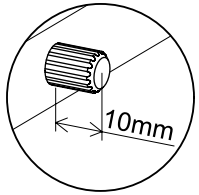

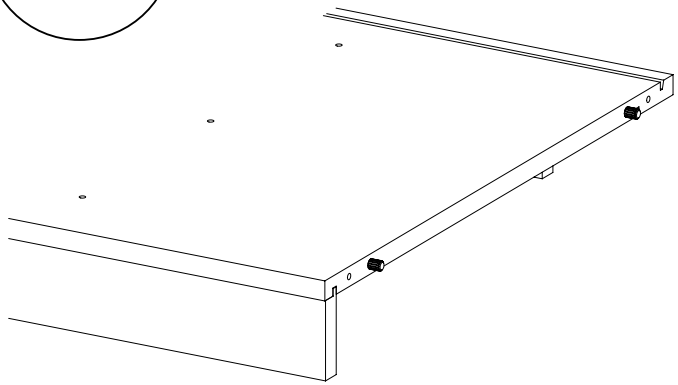

4

2x 233 6,3x50 PZ2

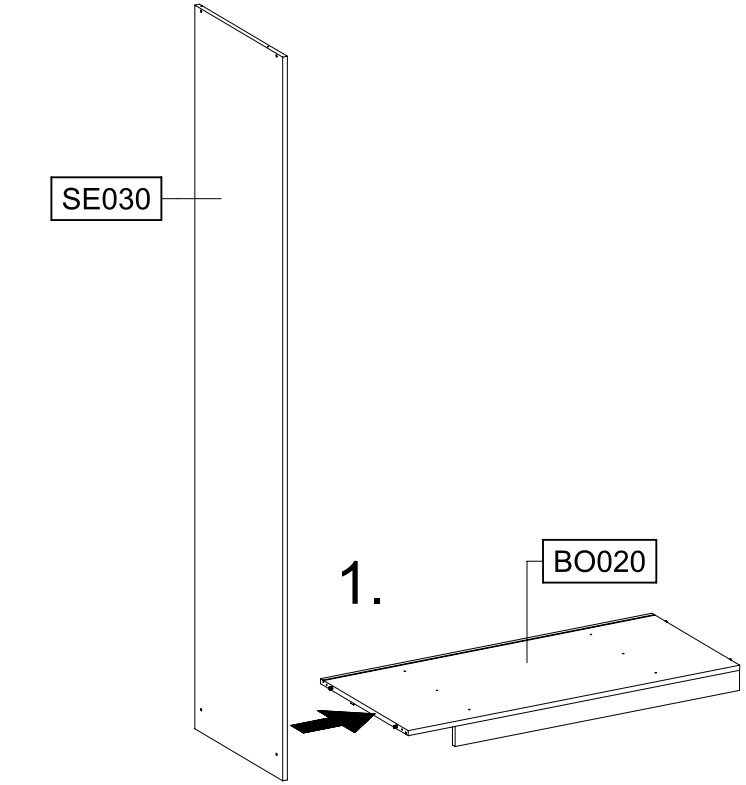

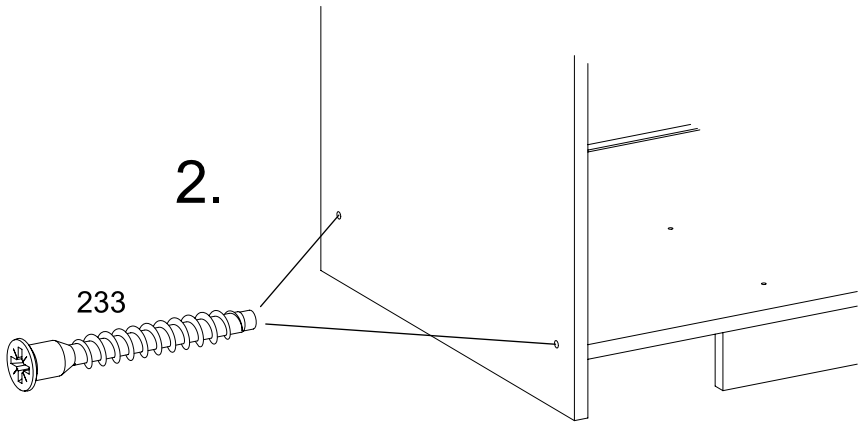

5 | 1x 1 | 1x 779 6,5x12 | PZ2

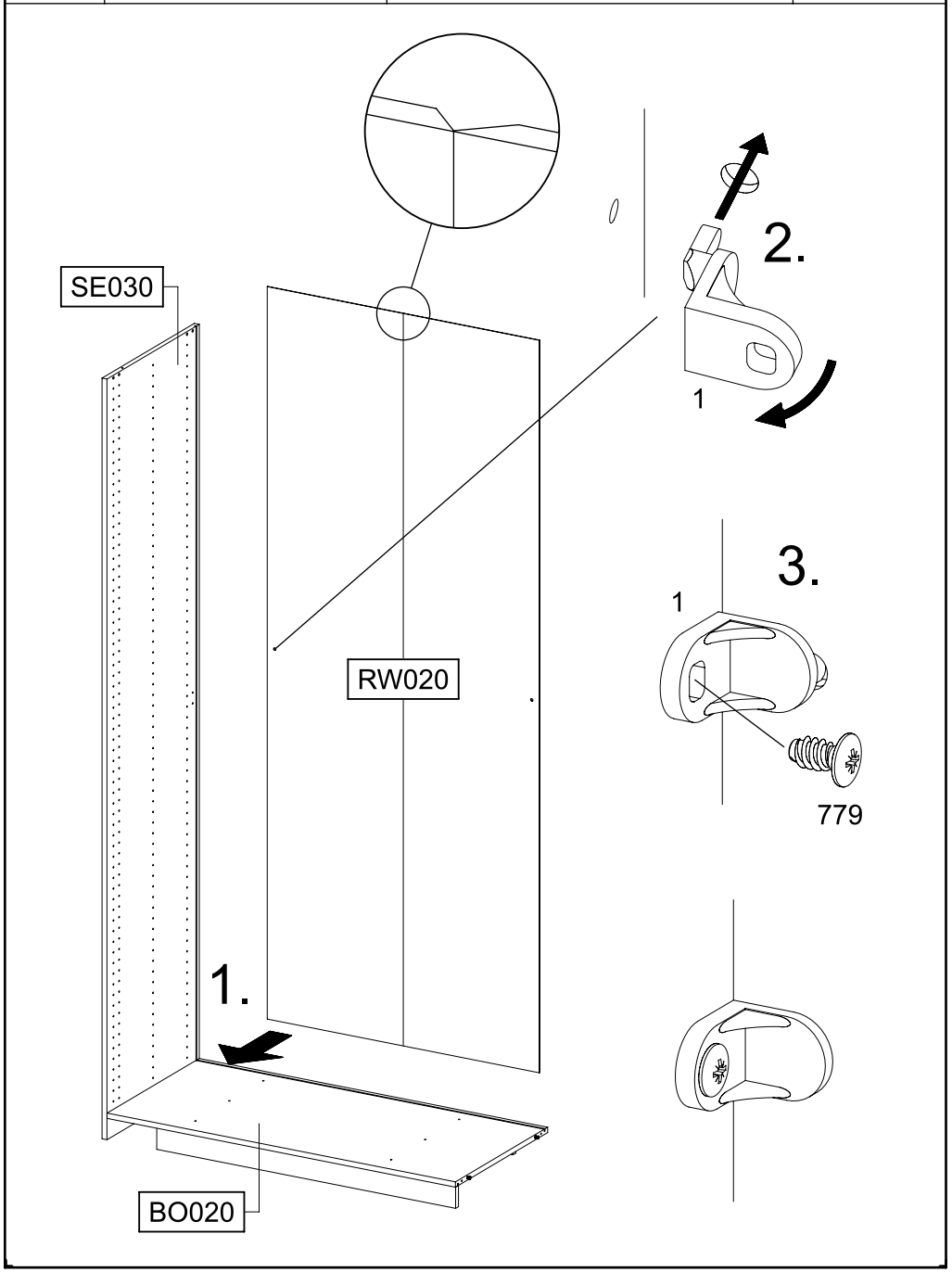

6 | 2x 807

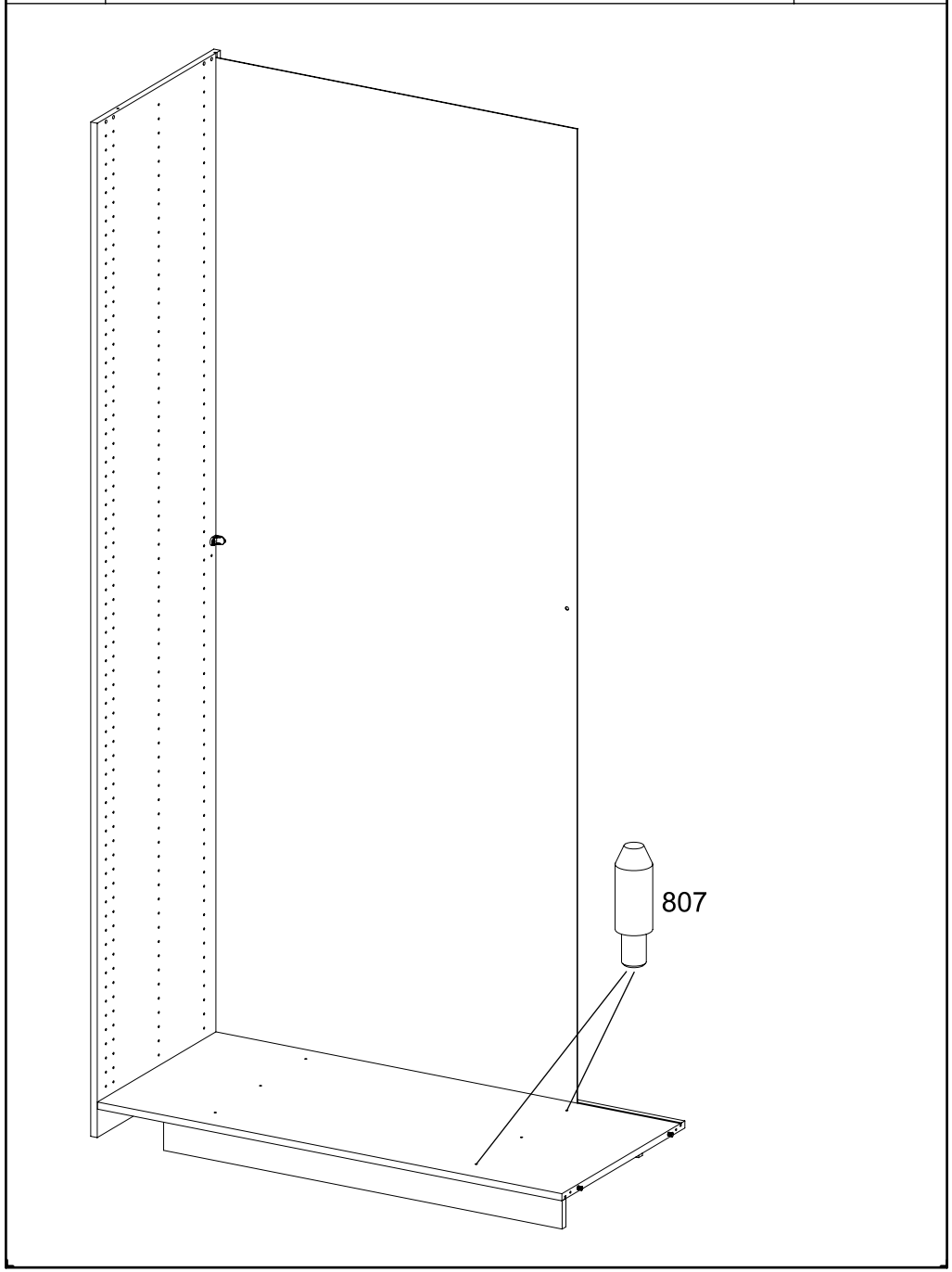

7 | 1x 1 | 1x 779 6,5x12 | PZ2

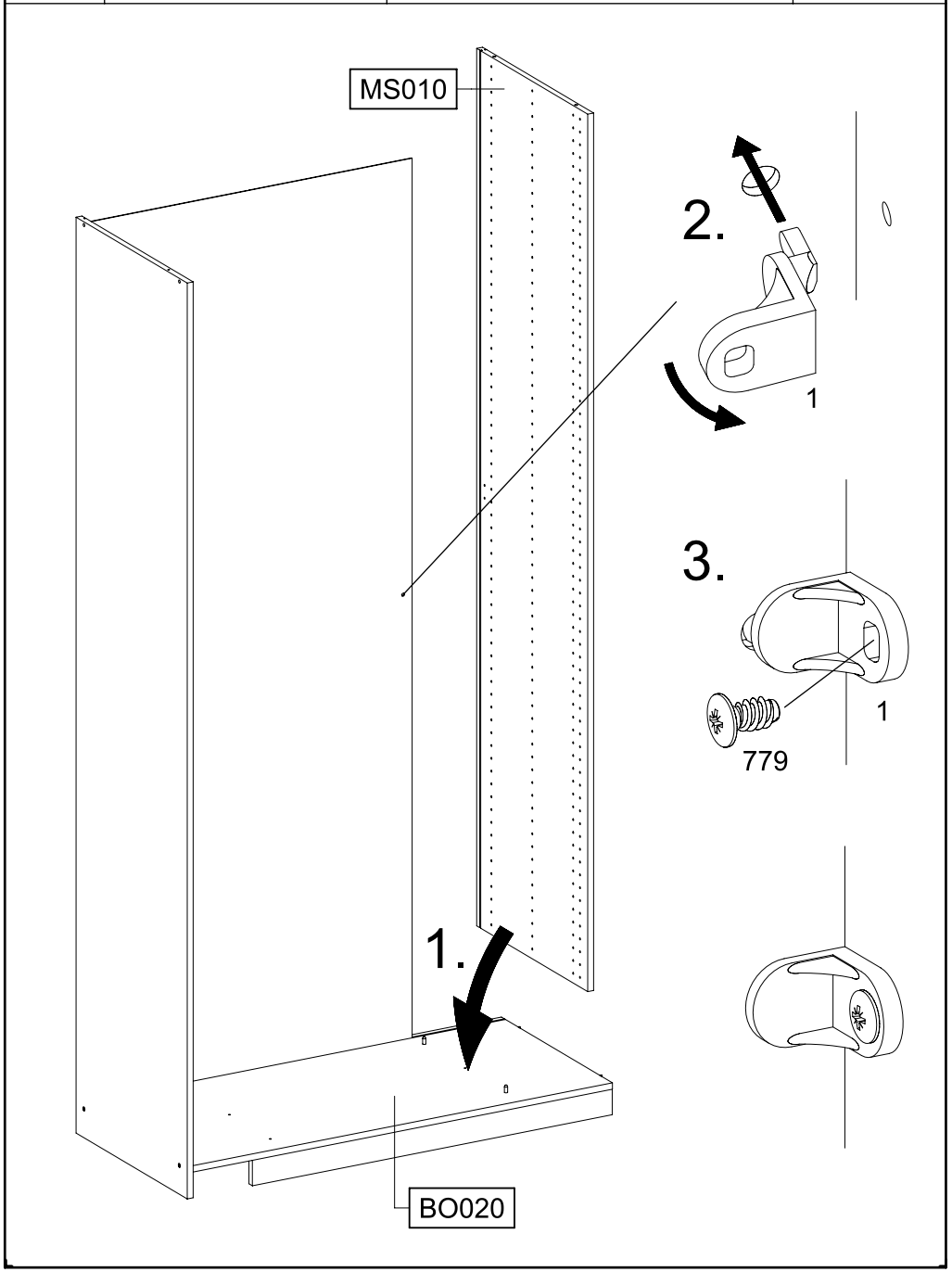

180 | 1x 1 | 1x 779 6,5x12 | PZ2

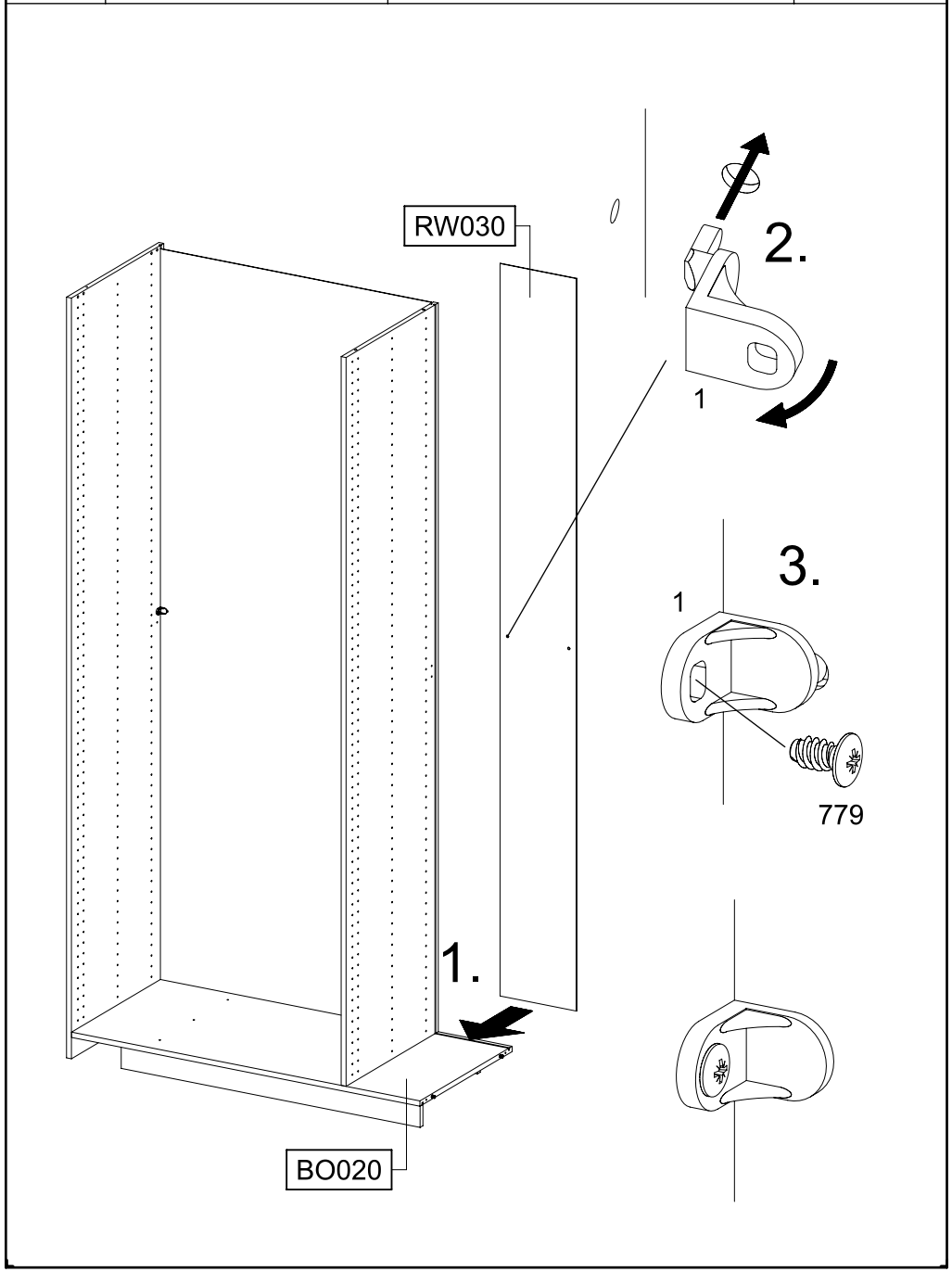

9	4x (18) 8x30	2x (807)		

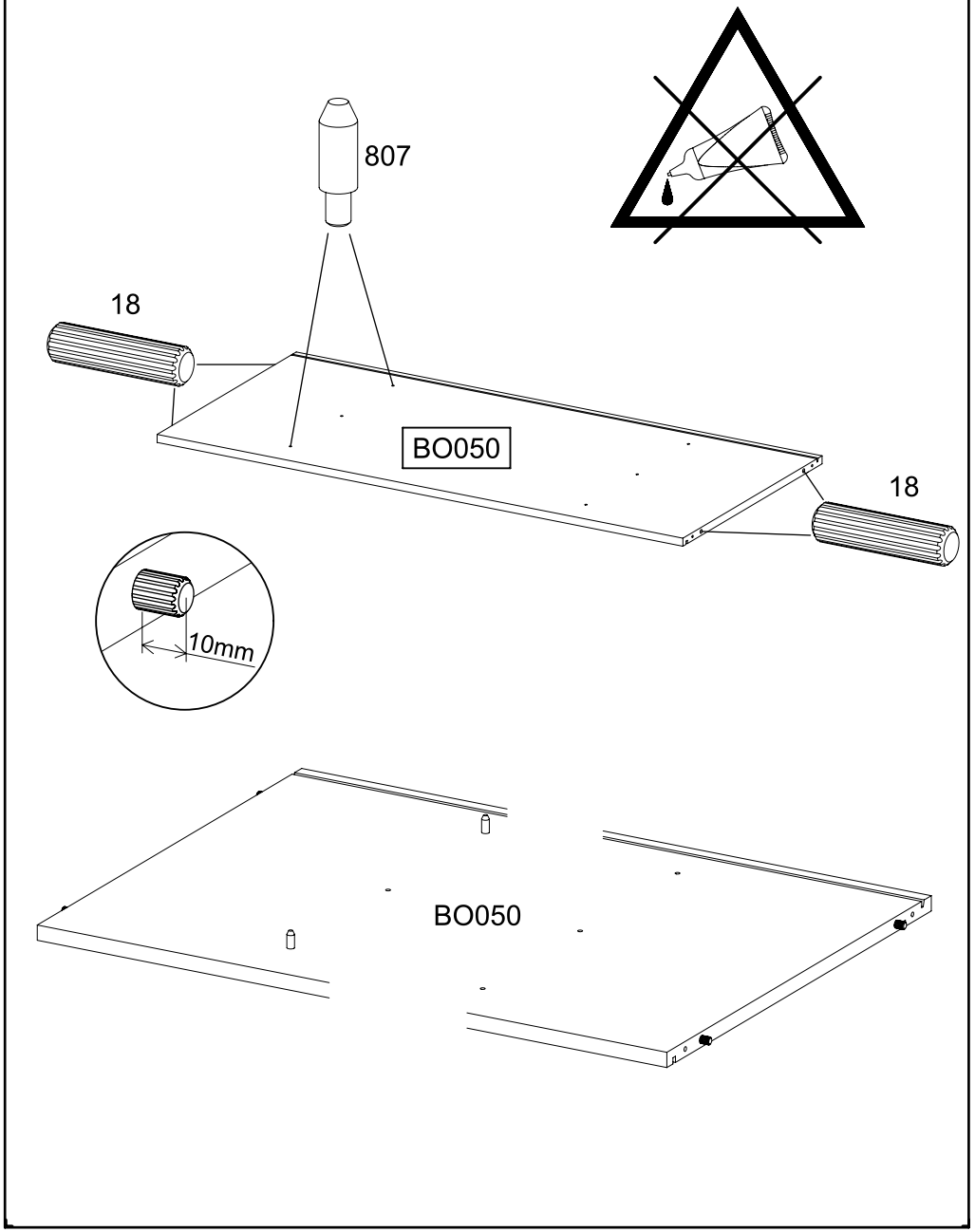

10			∅5mm

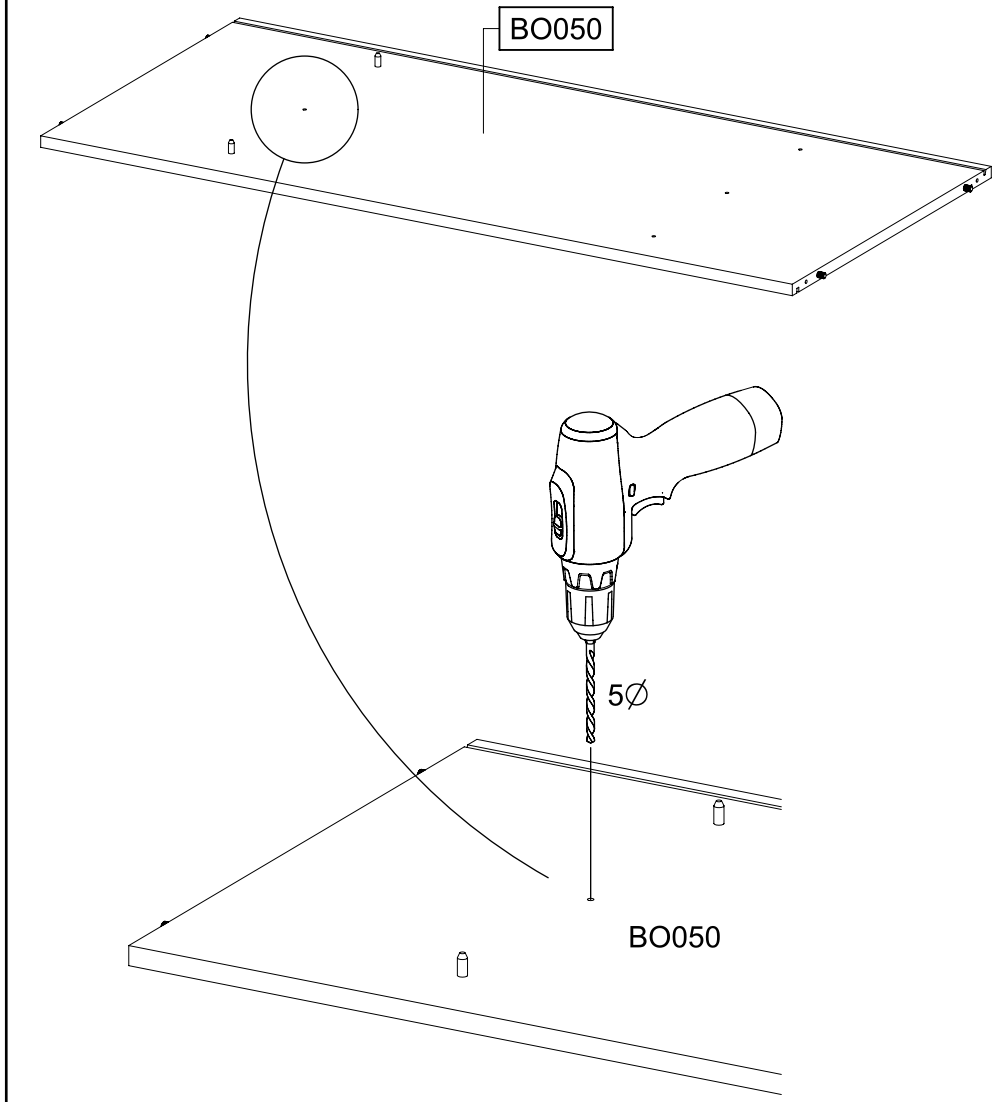

11

2x 233 6,3x50

PZ2

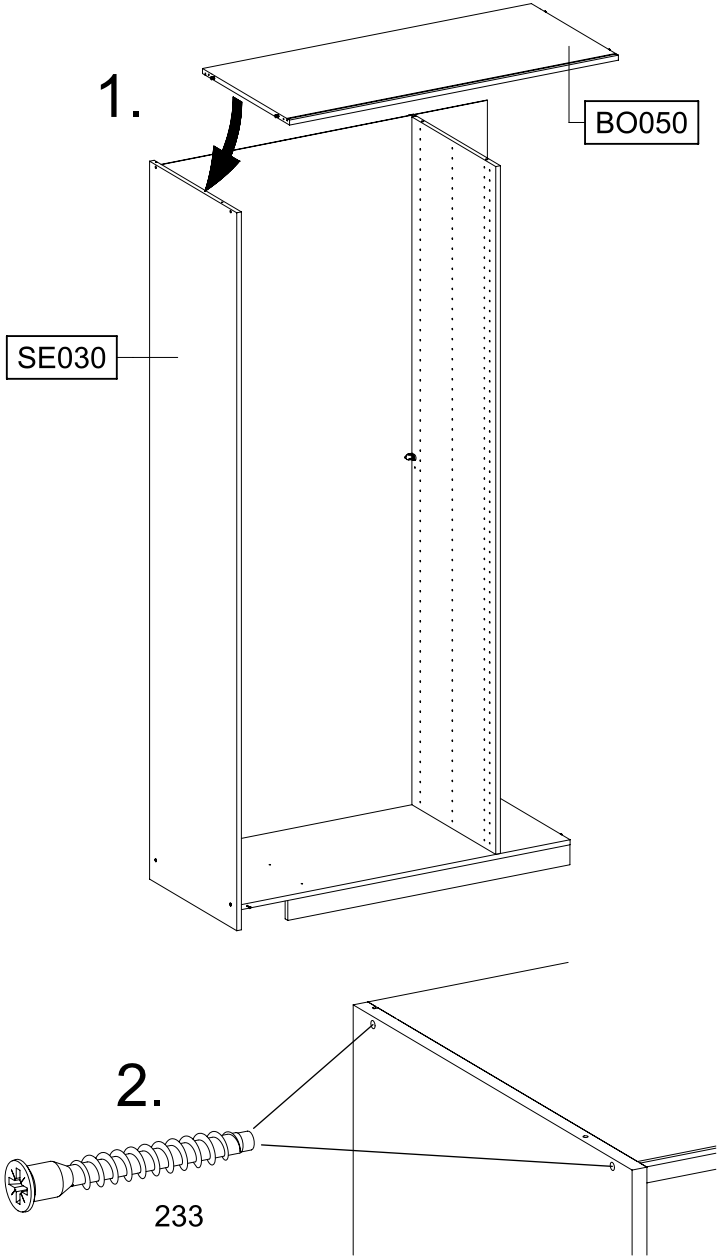

12

4x 233 6,3x50

PZ2

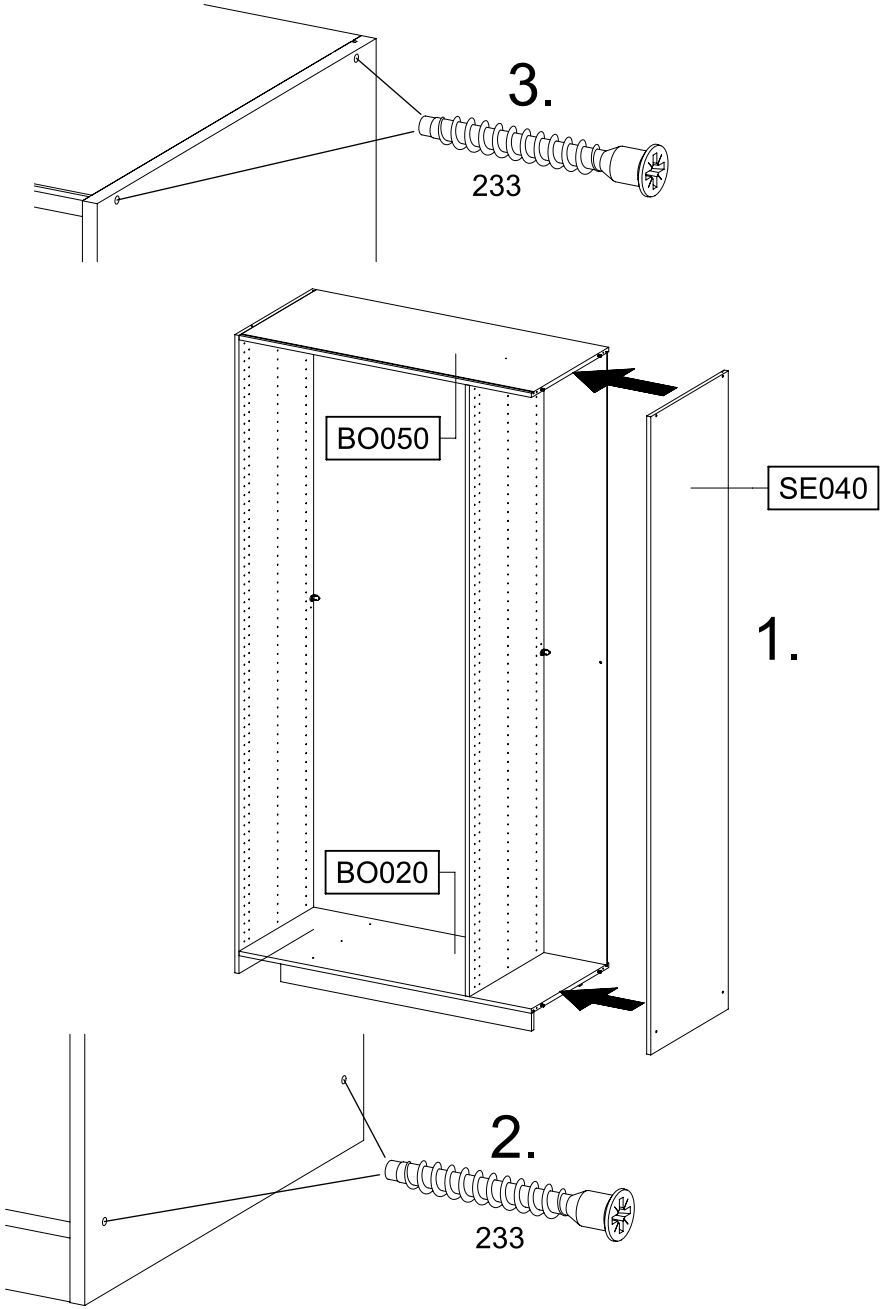

13	1x 1	1x 779 6,5x12	PZ2

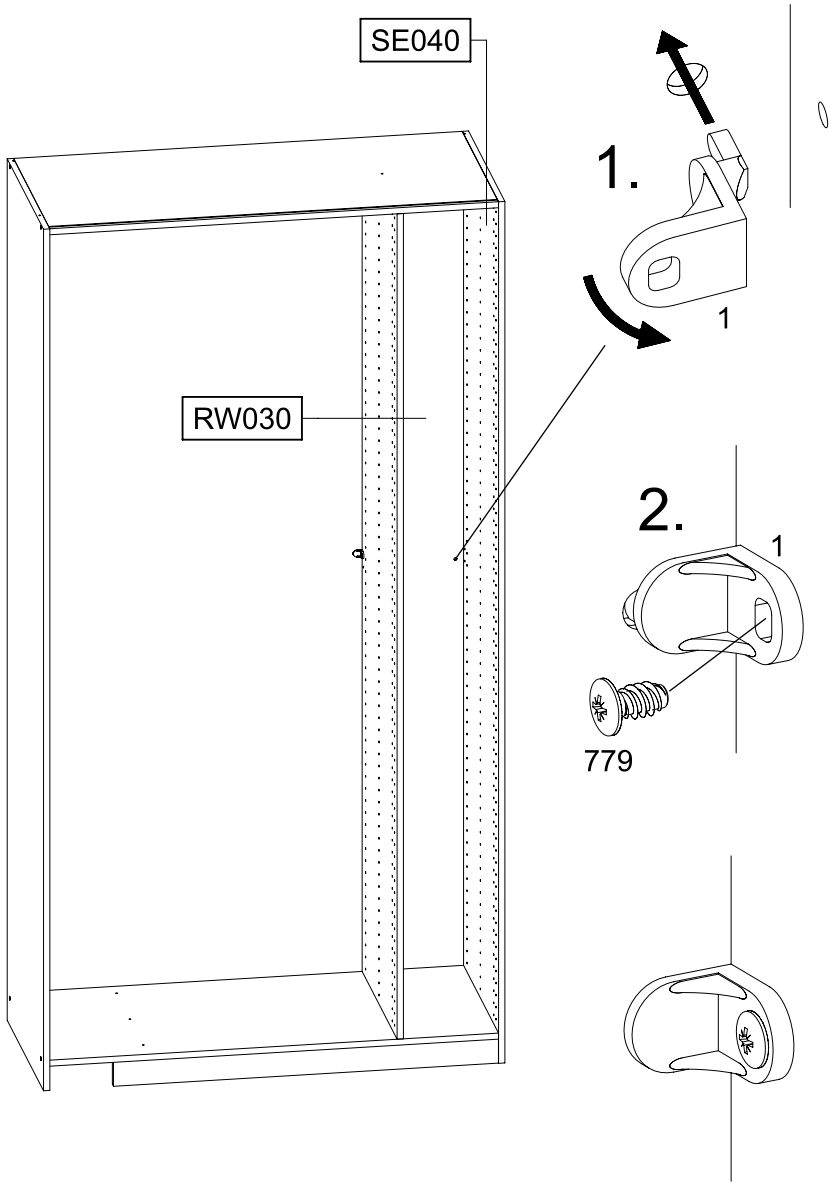

14	1x 296 4,5x50	PZ2

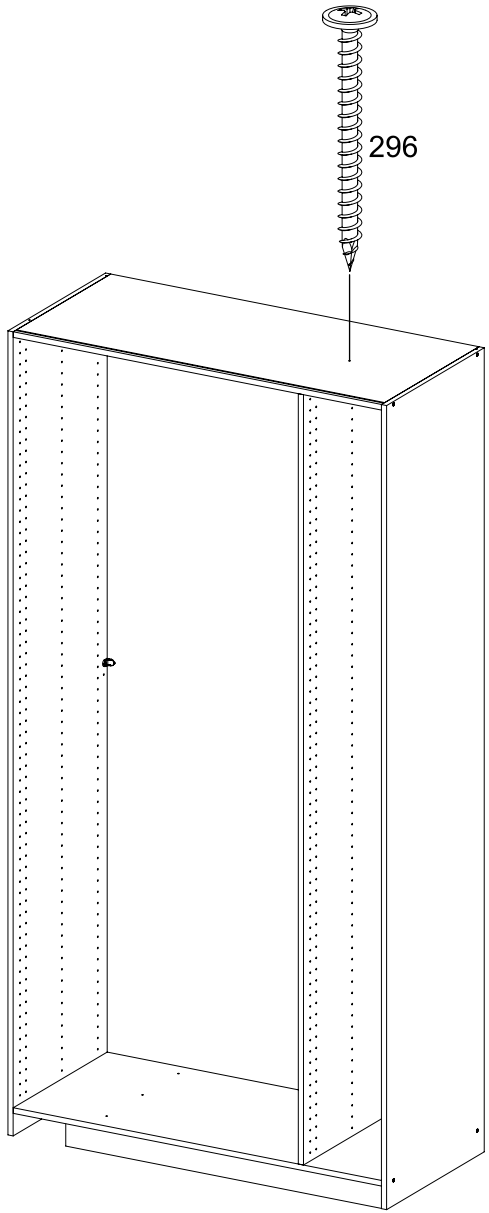

15

4x 183

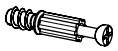

PZ2

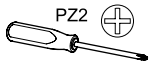

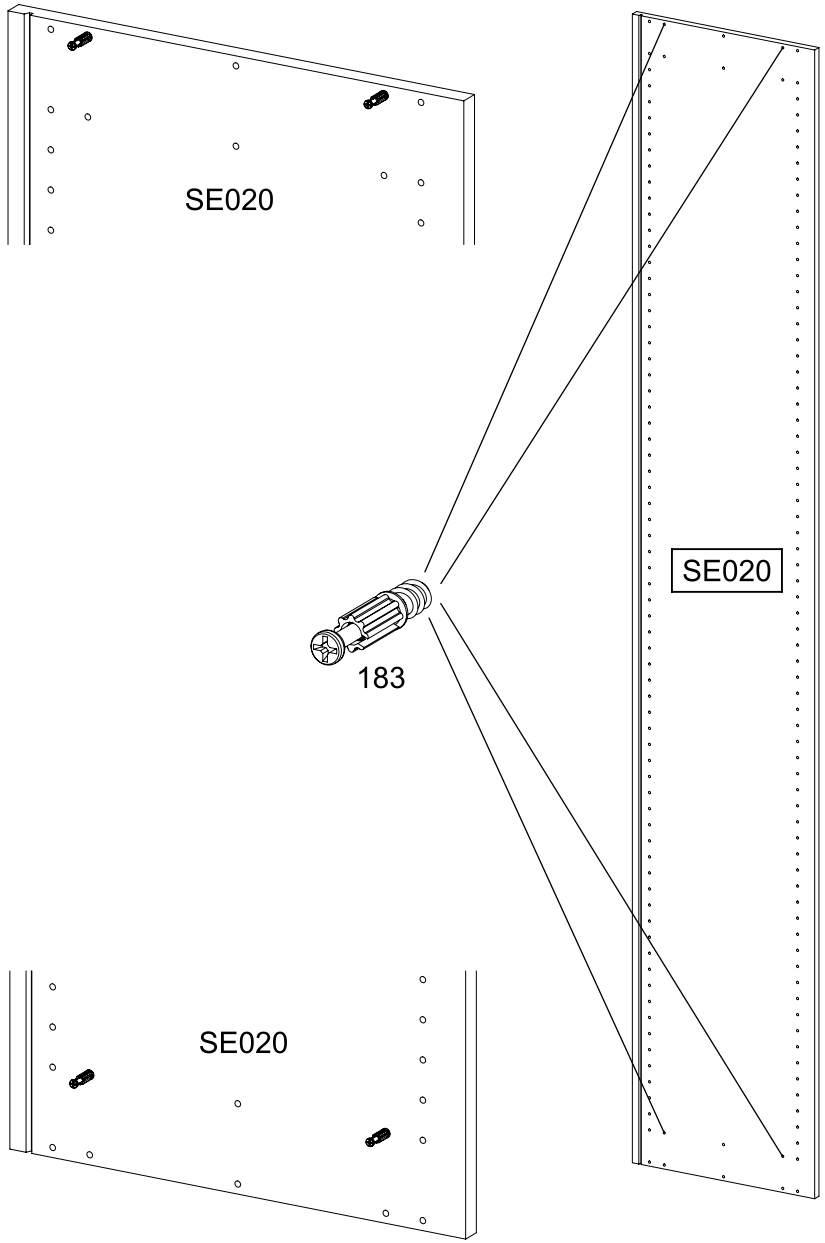

16

4x 447

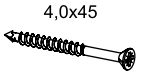

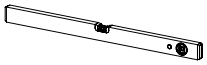

PZ2

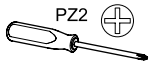

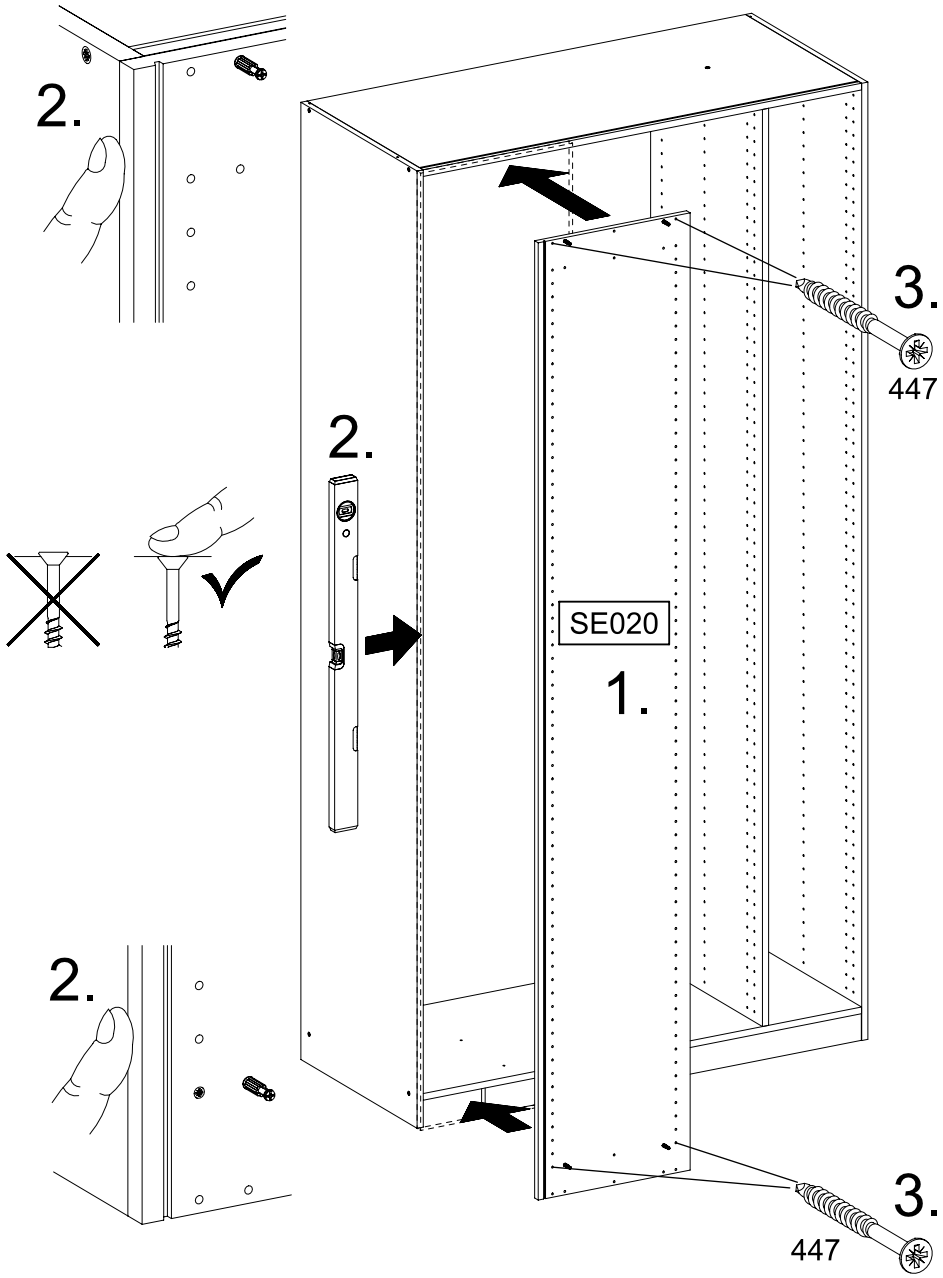

17

3x 349

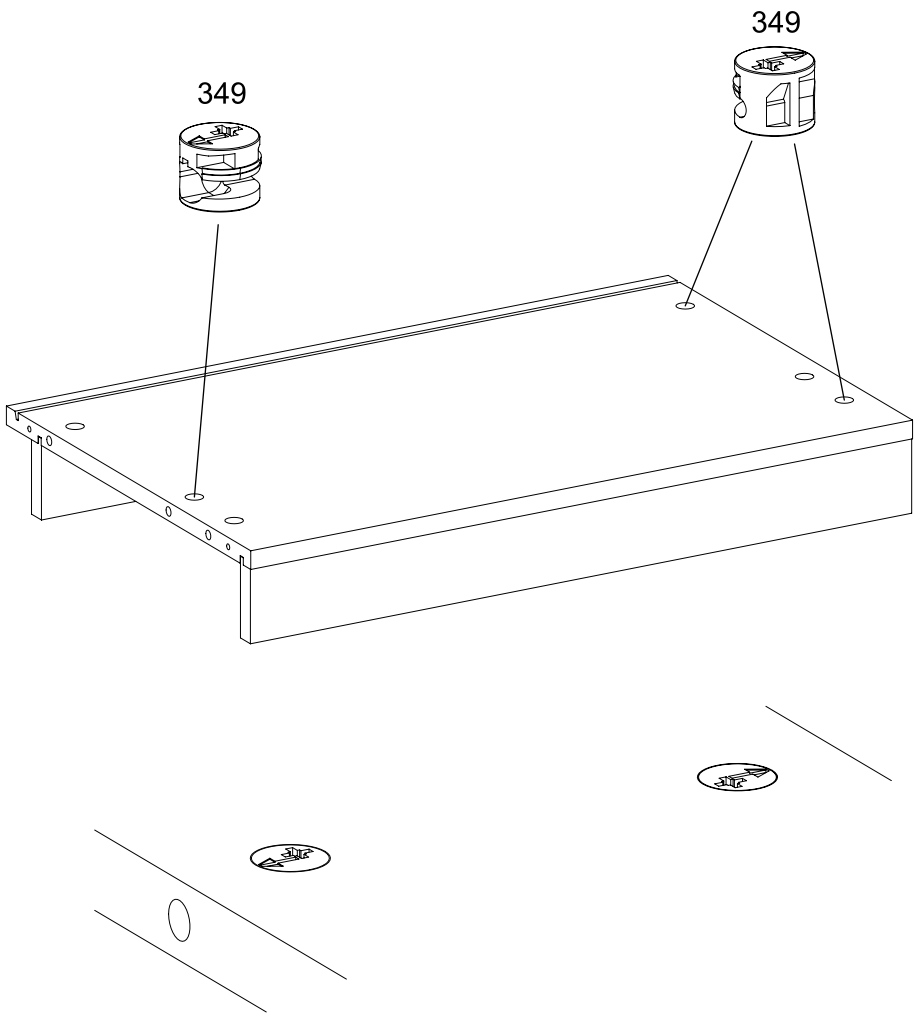

18

PZ2

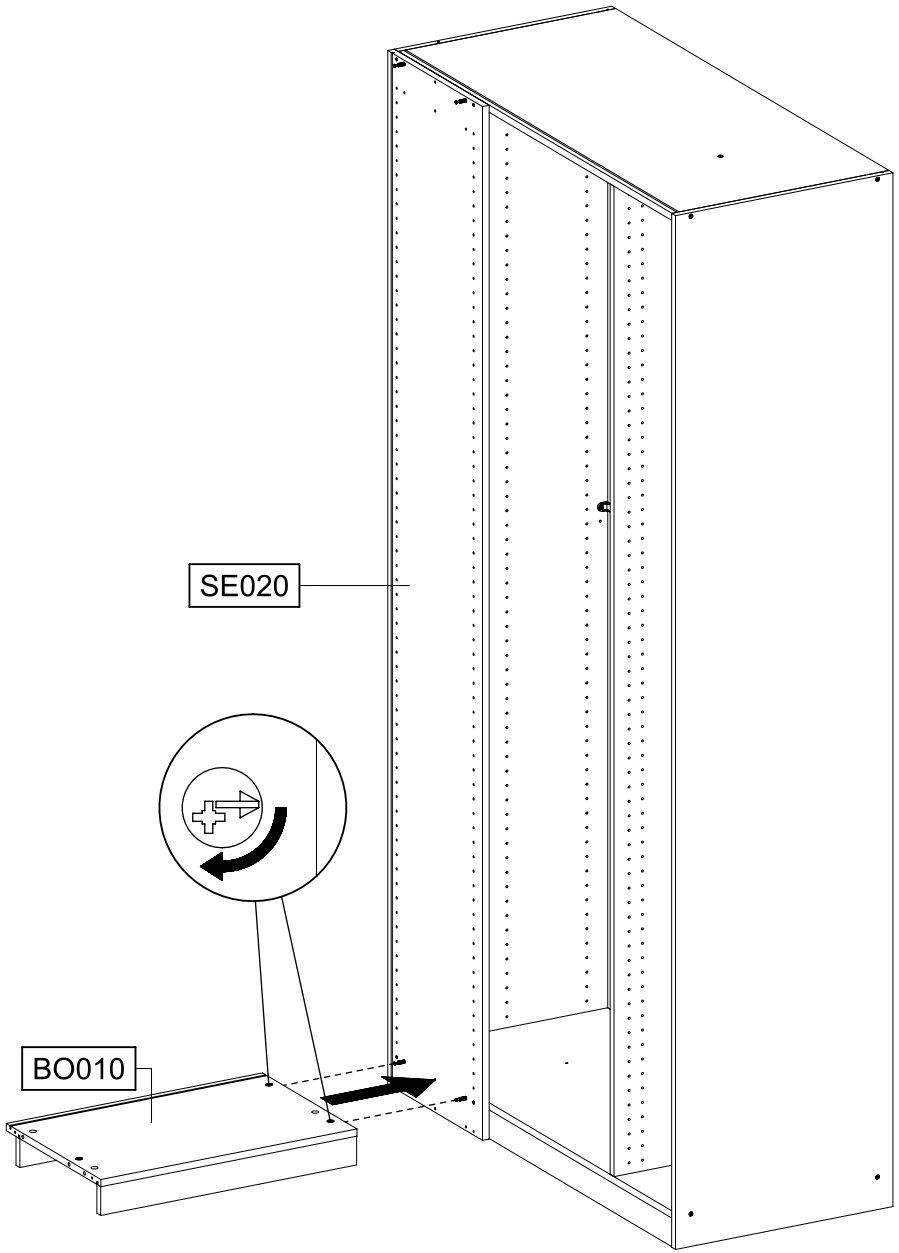

19 | 1x (1) | 1x (779) 6,5x12 | PZ2

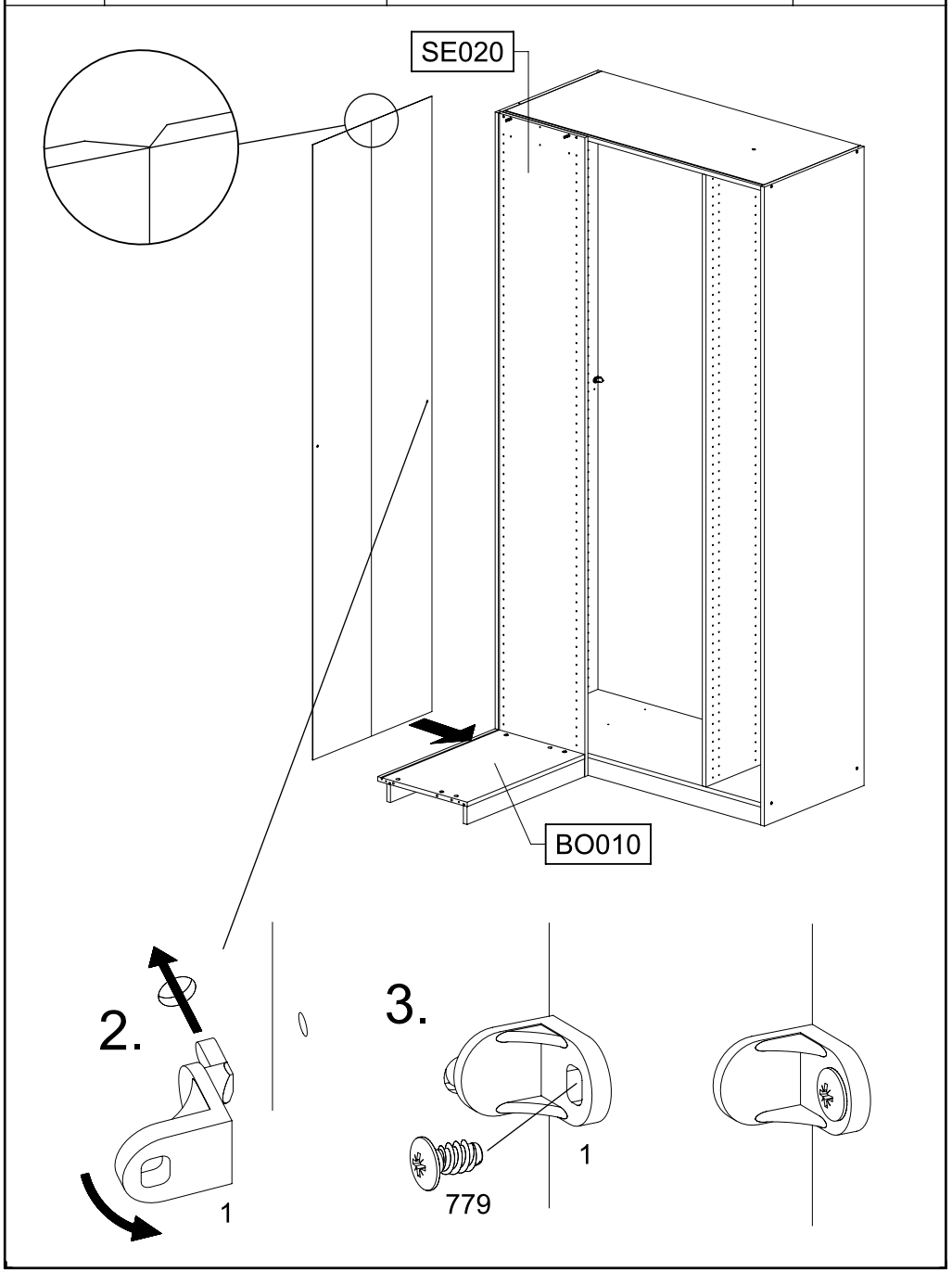

20 | 2x (349) | PZ2

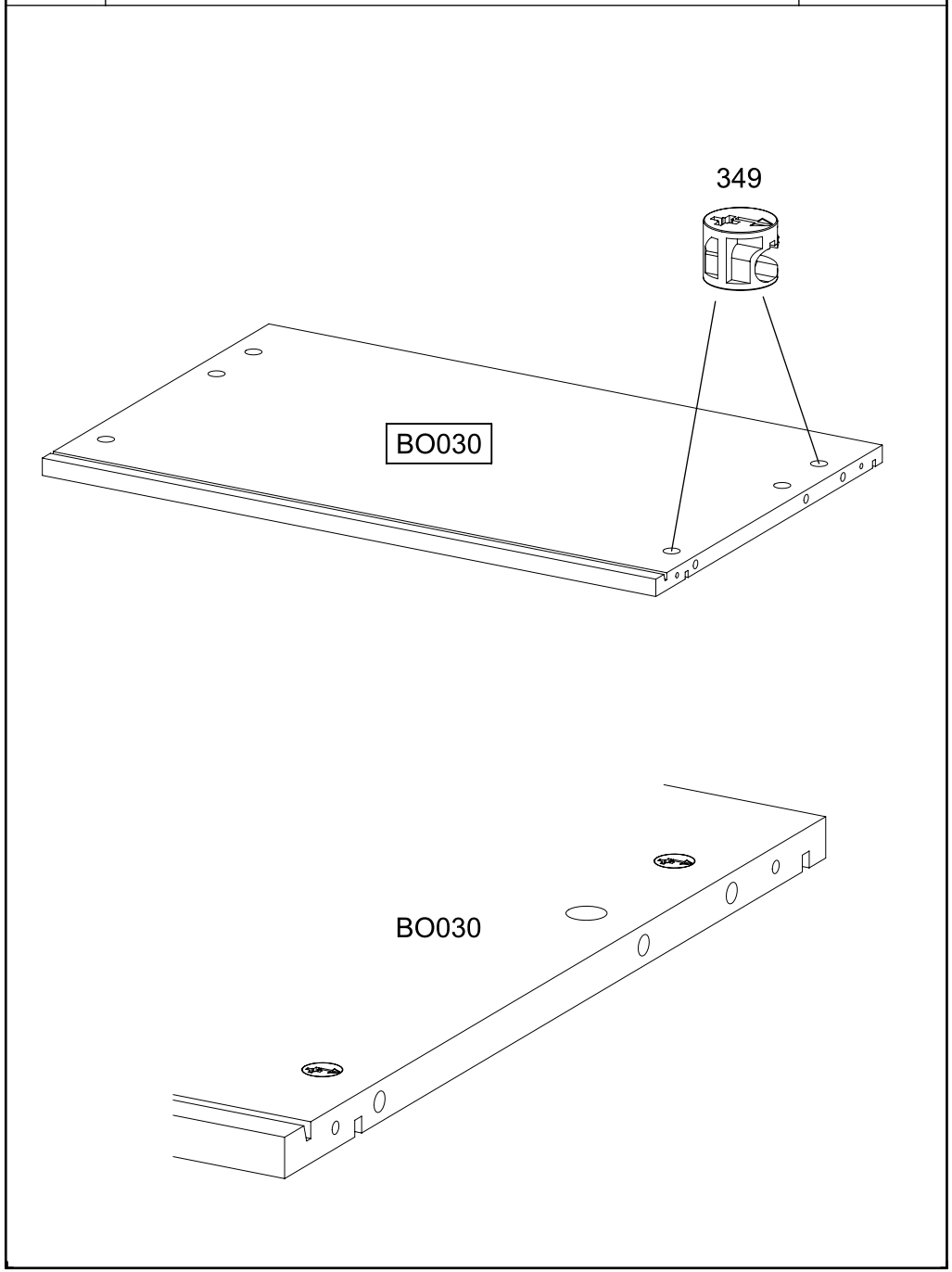

21

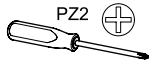

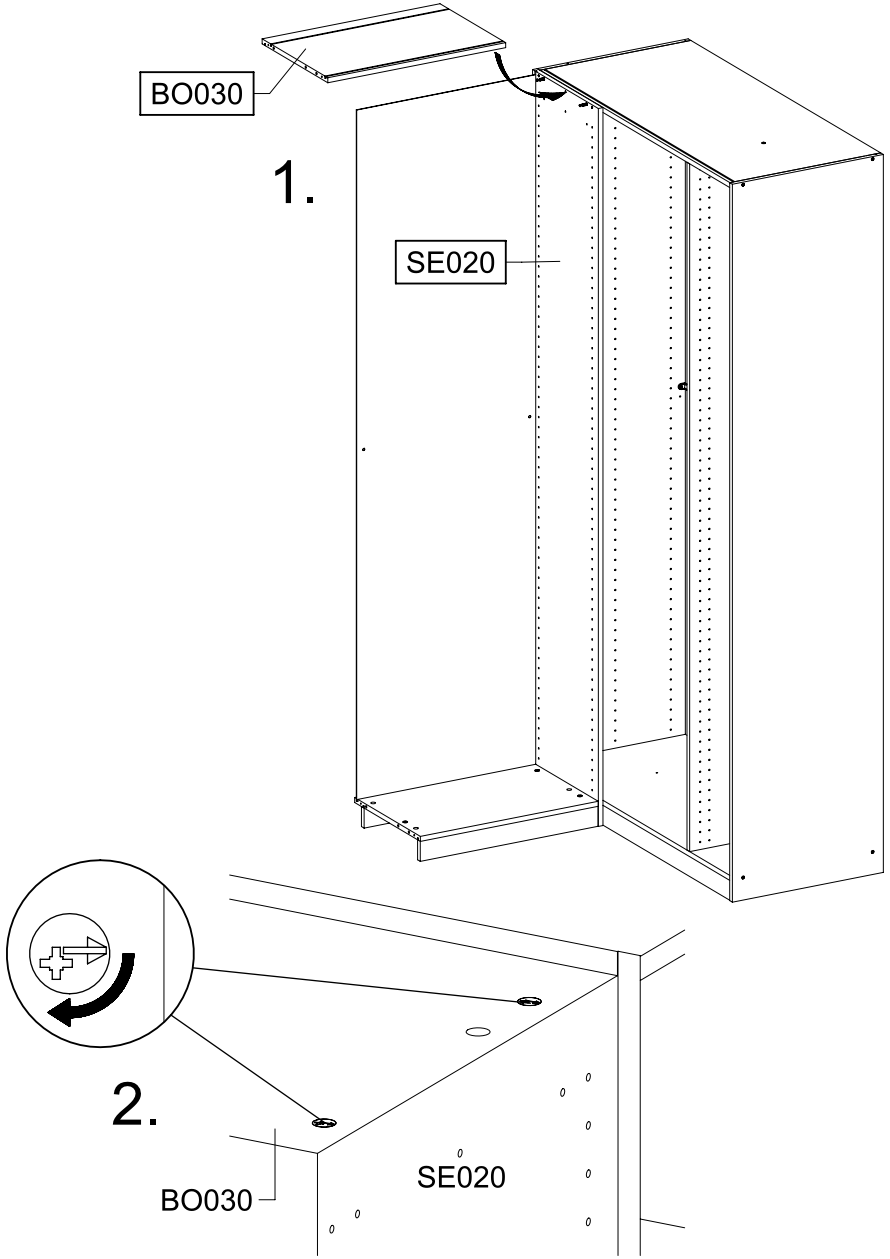

22

1x 183

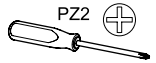

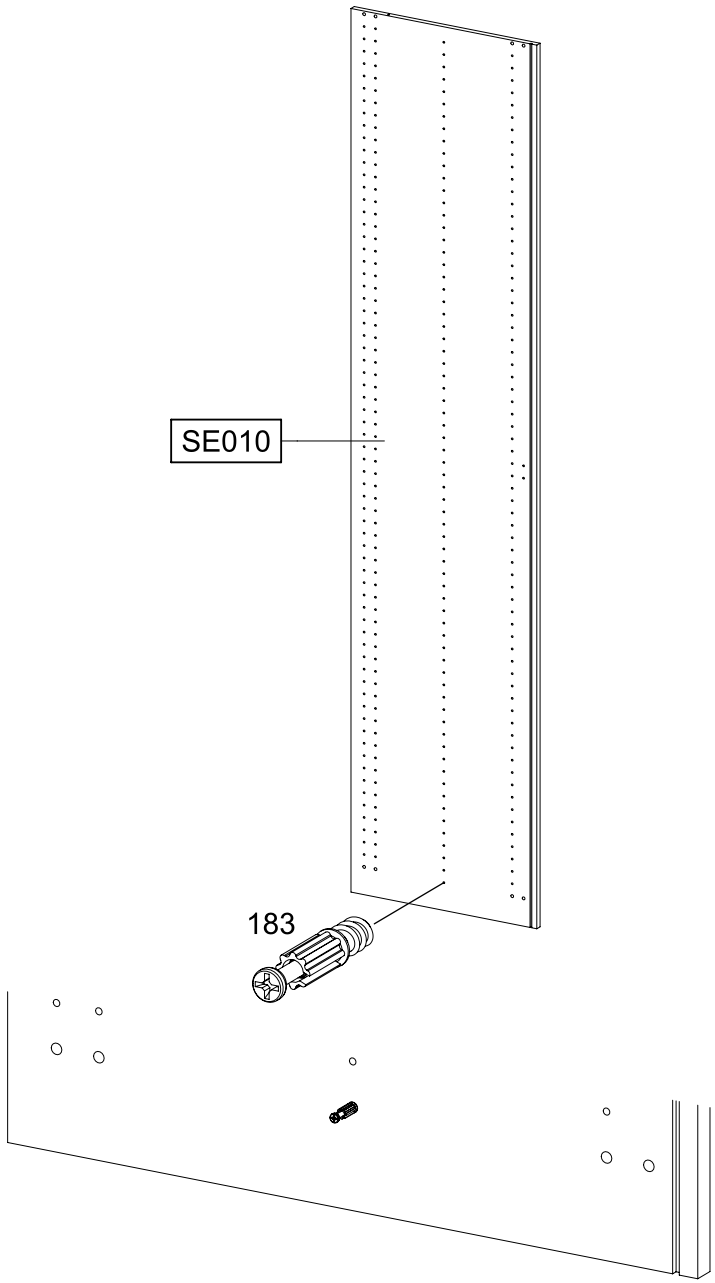

23

2x 233 6,3x50

PZ2

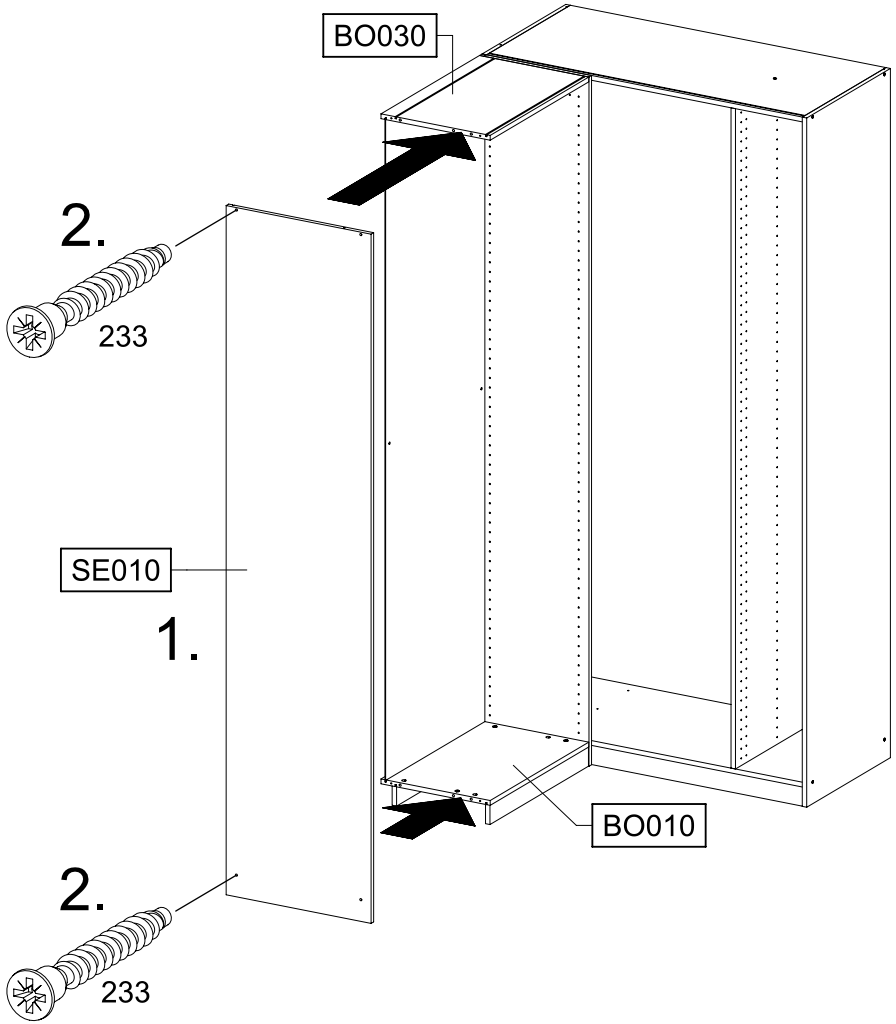

24

PZ2

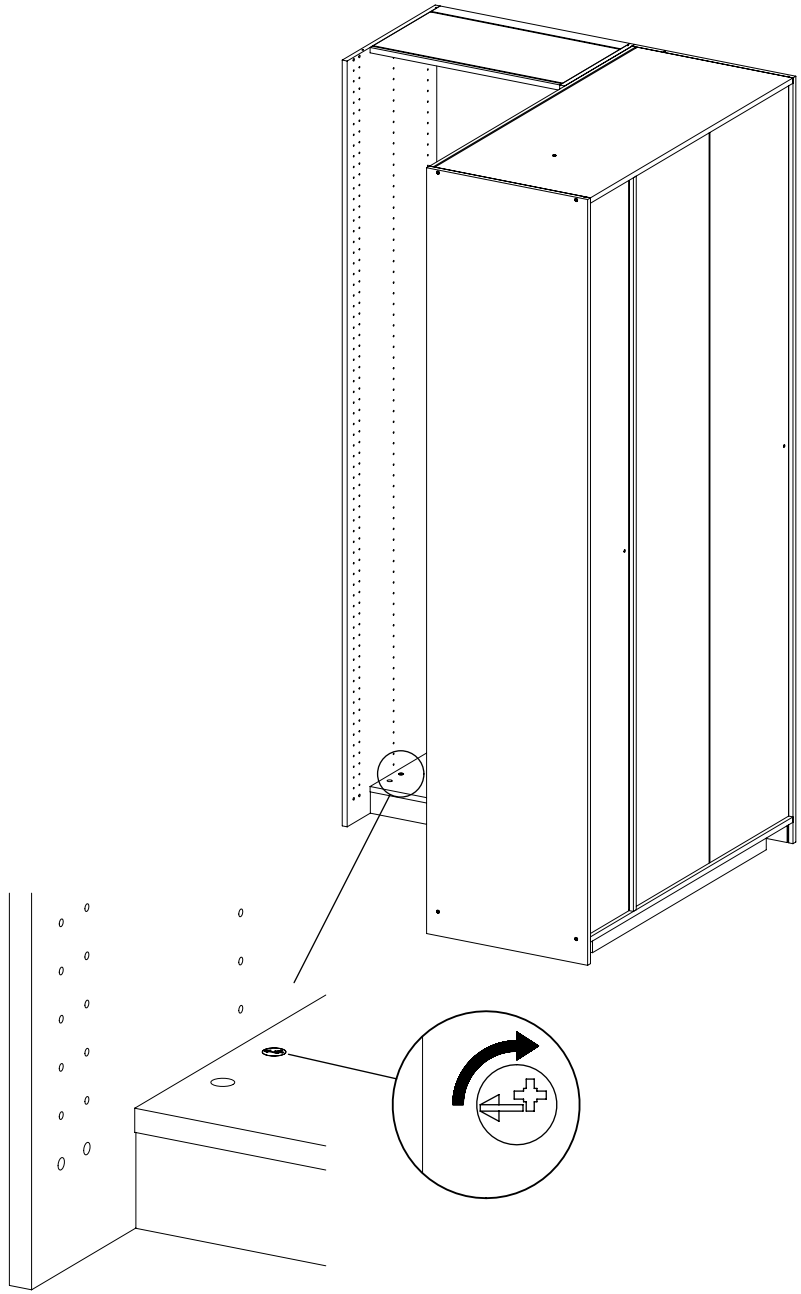

25	1x 1	1x 779 6,5x12	PZ2

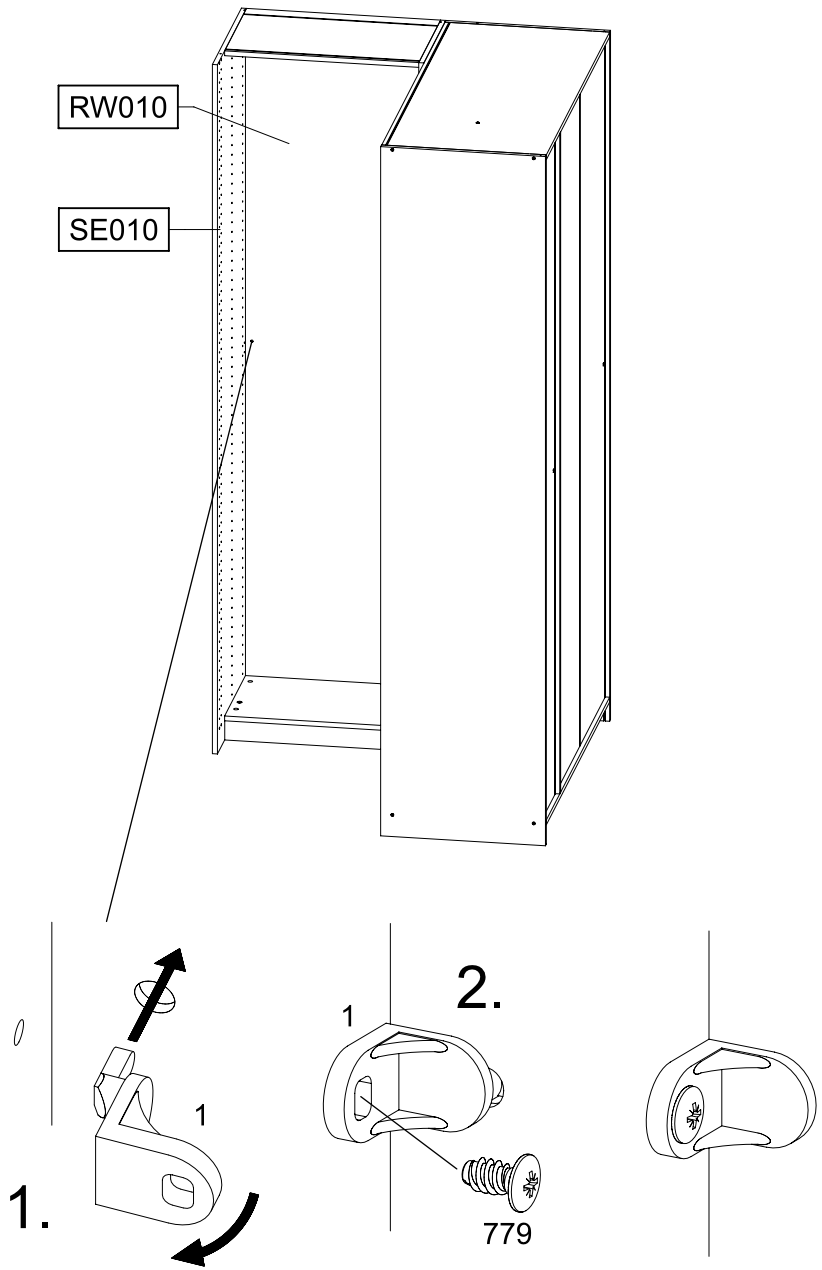

26	4x 174	8x 202 4,5x16		PZ2

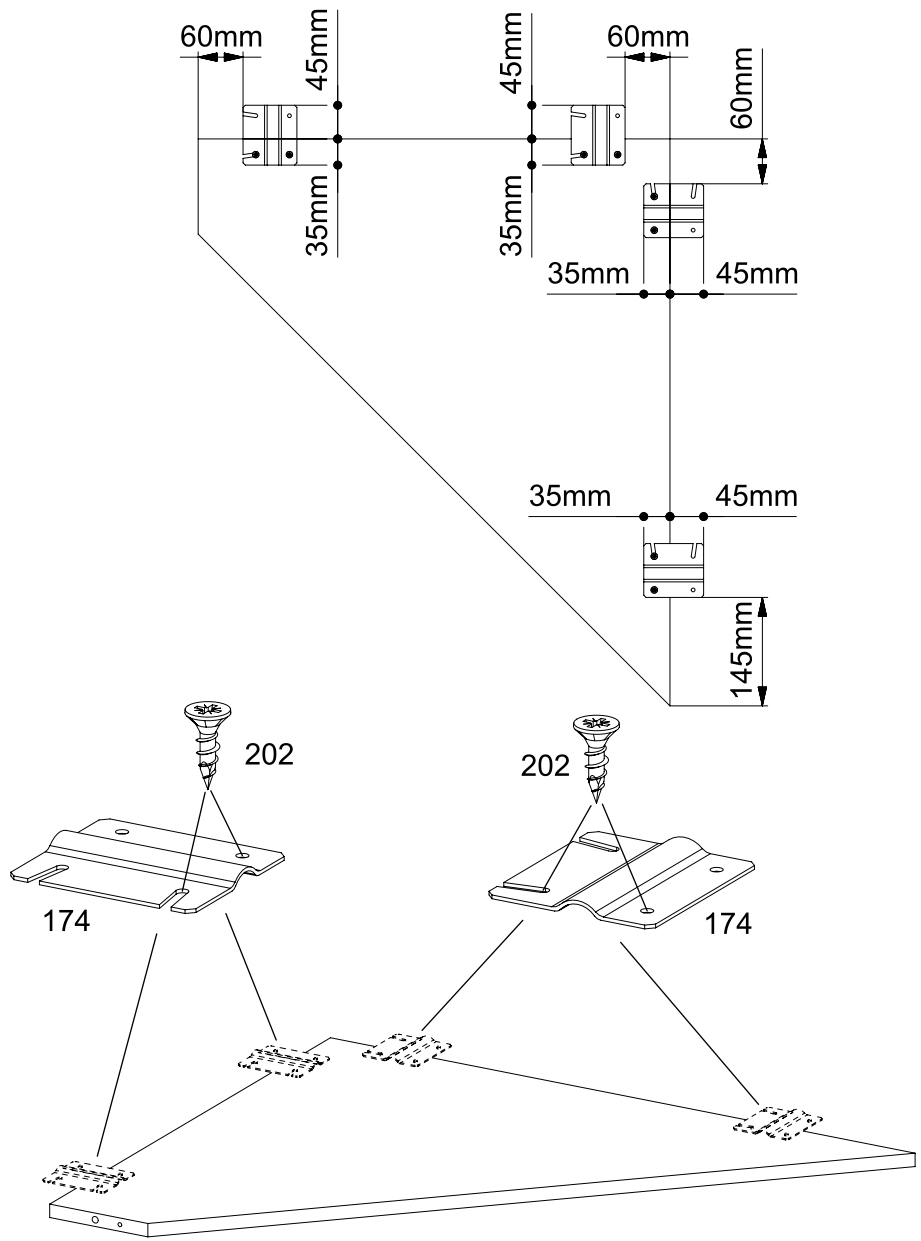

27

1x 18 8x30

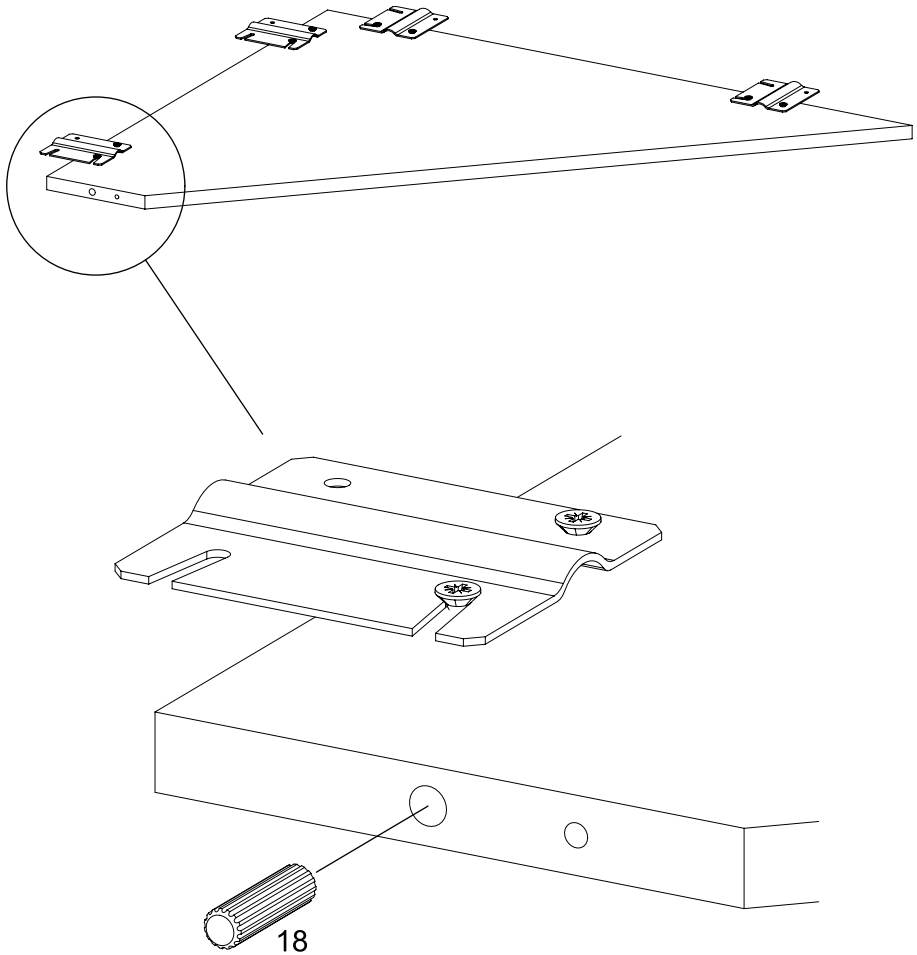

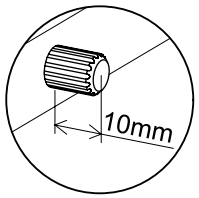

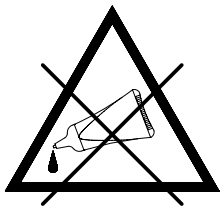

28

8x 202 4,5x16

1x 233 6,3x50

PZ2

1.

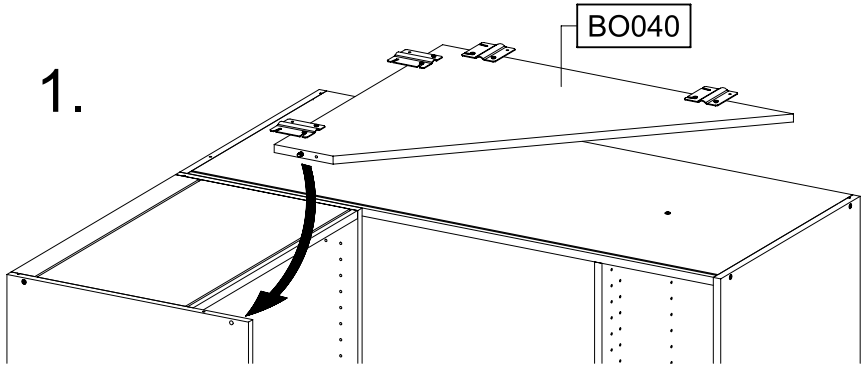

2.

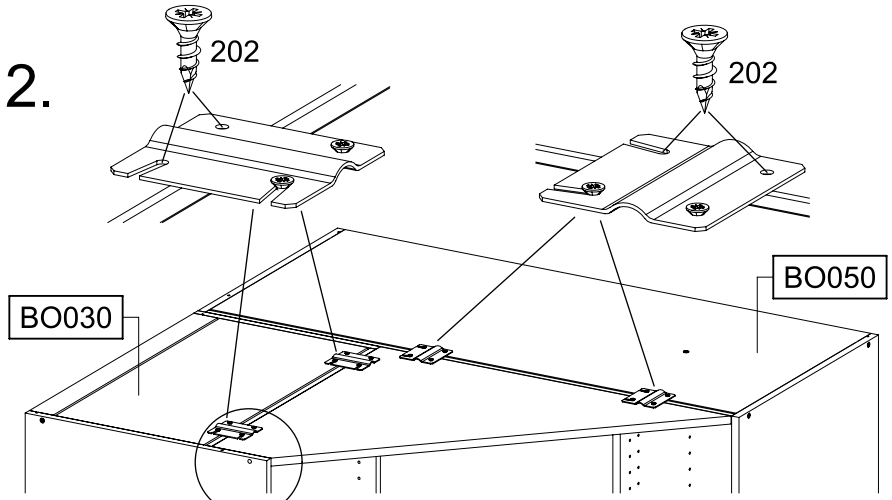

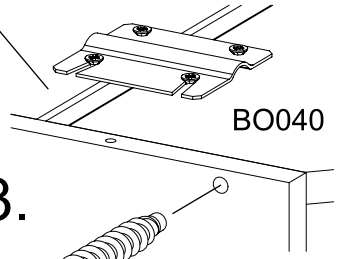

3.

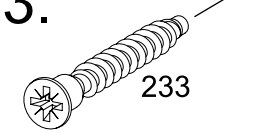

29

4x 1105

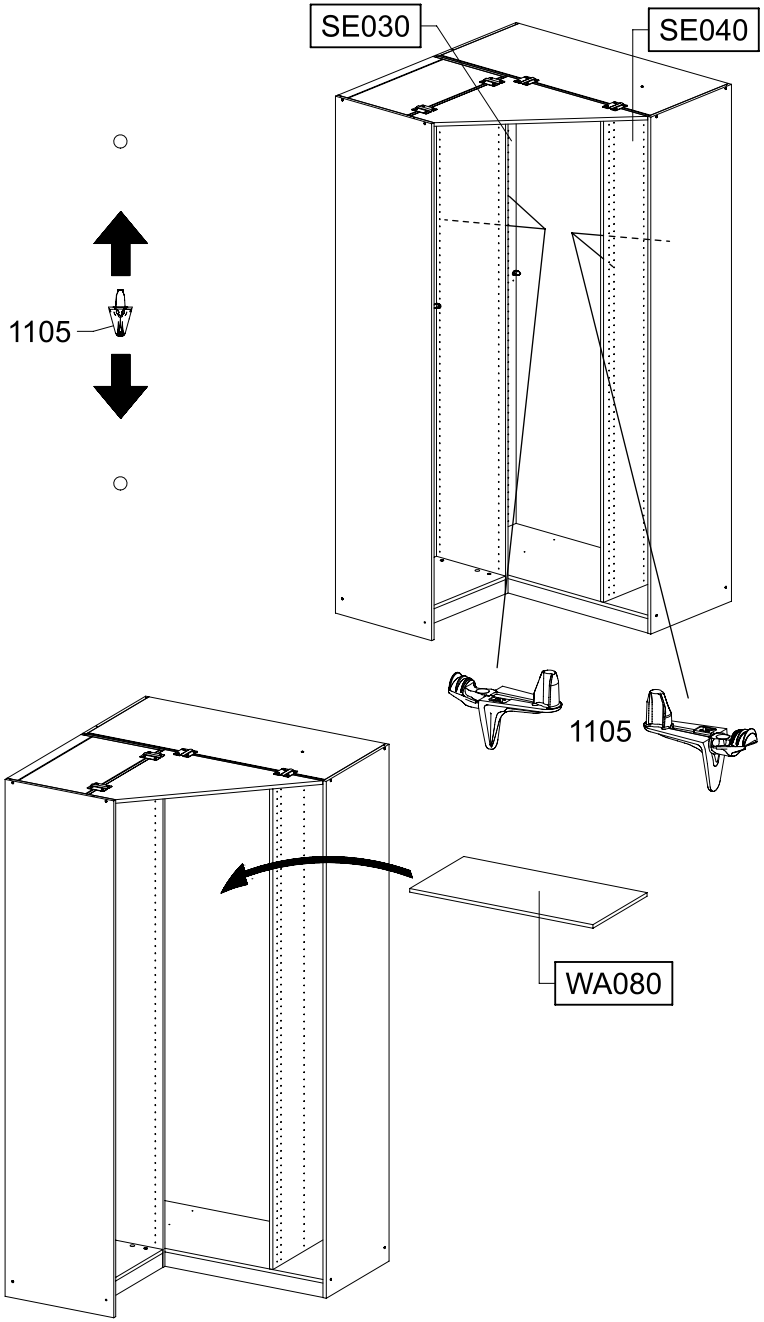

30

2x 205 3,5x15

2x 279

PZ2

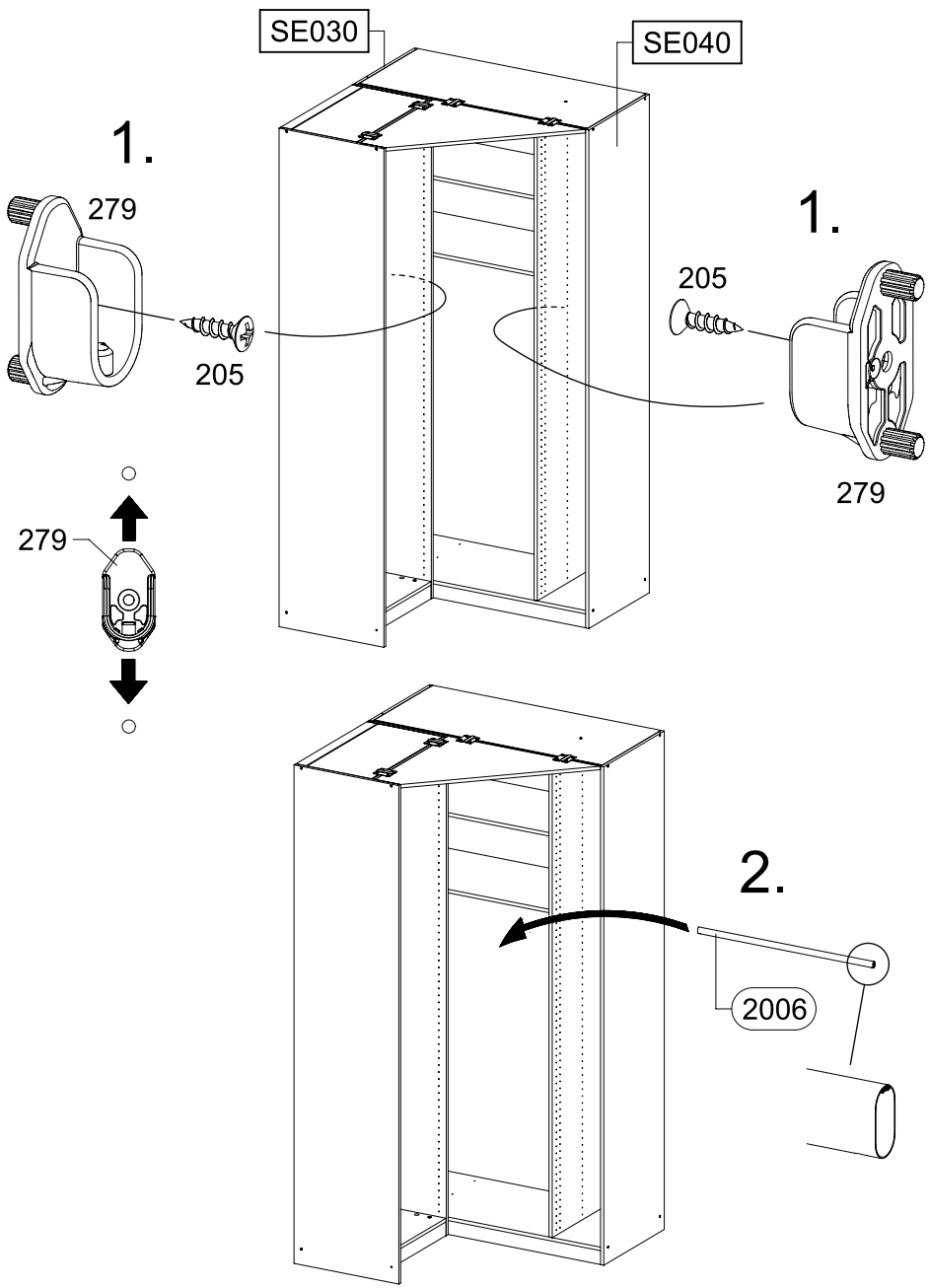

31 7x 848

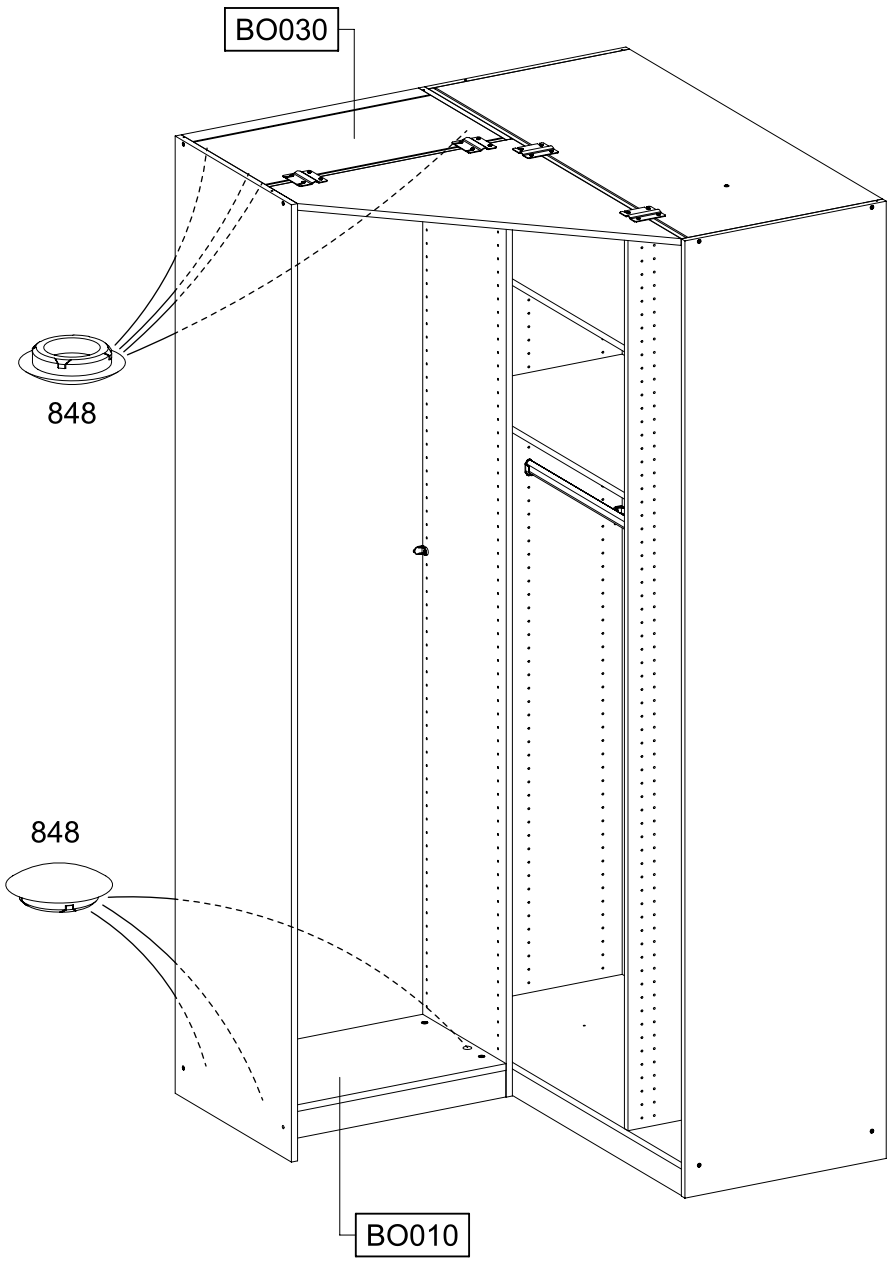

32 8x 14

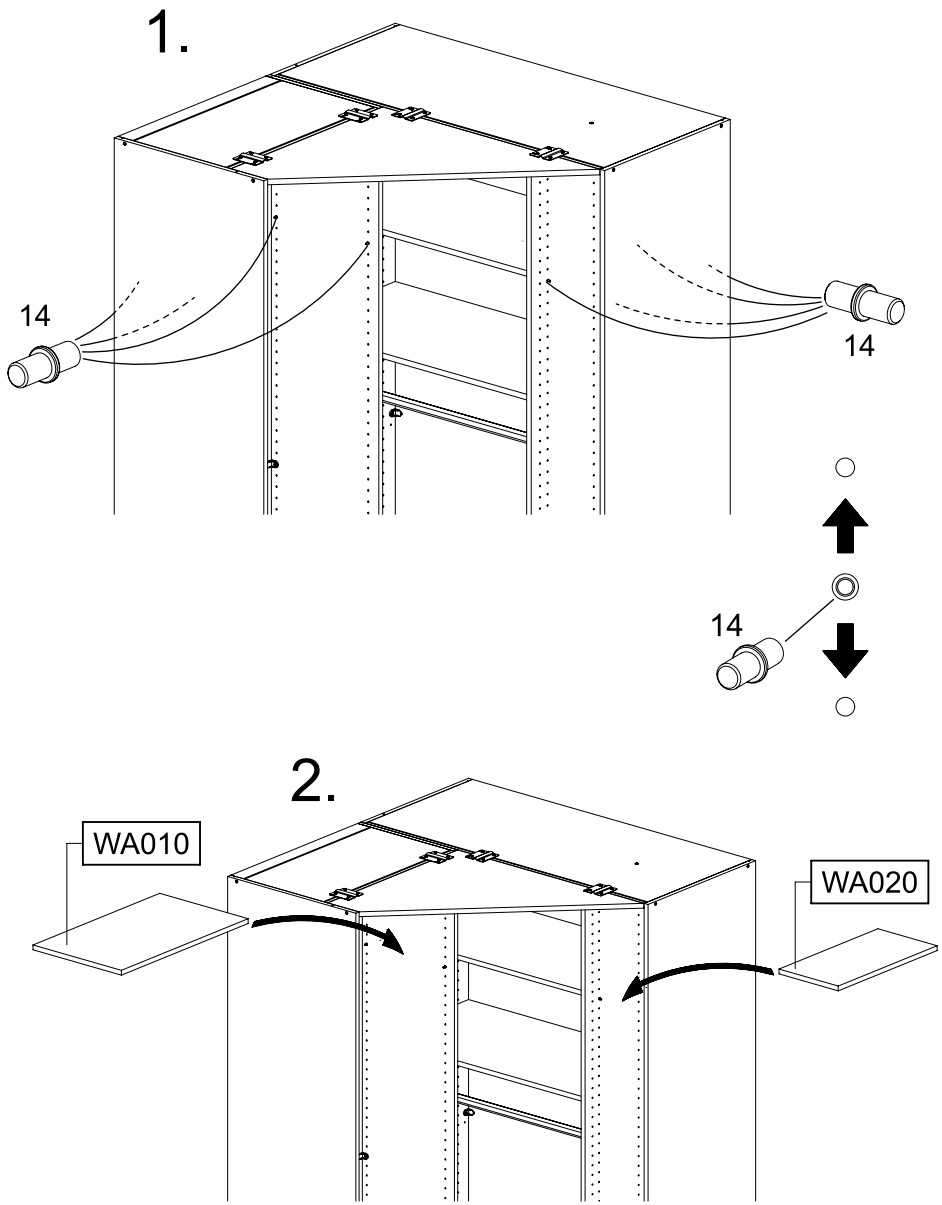

33

20x 205 3,5x15

10x 806

PZ2

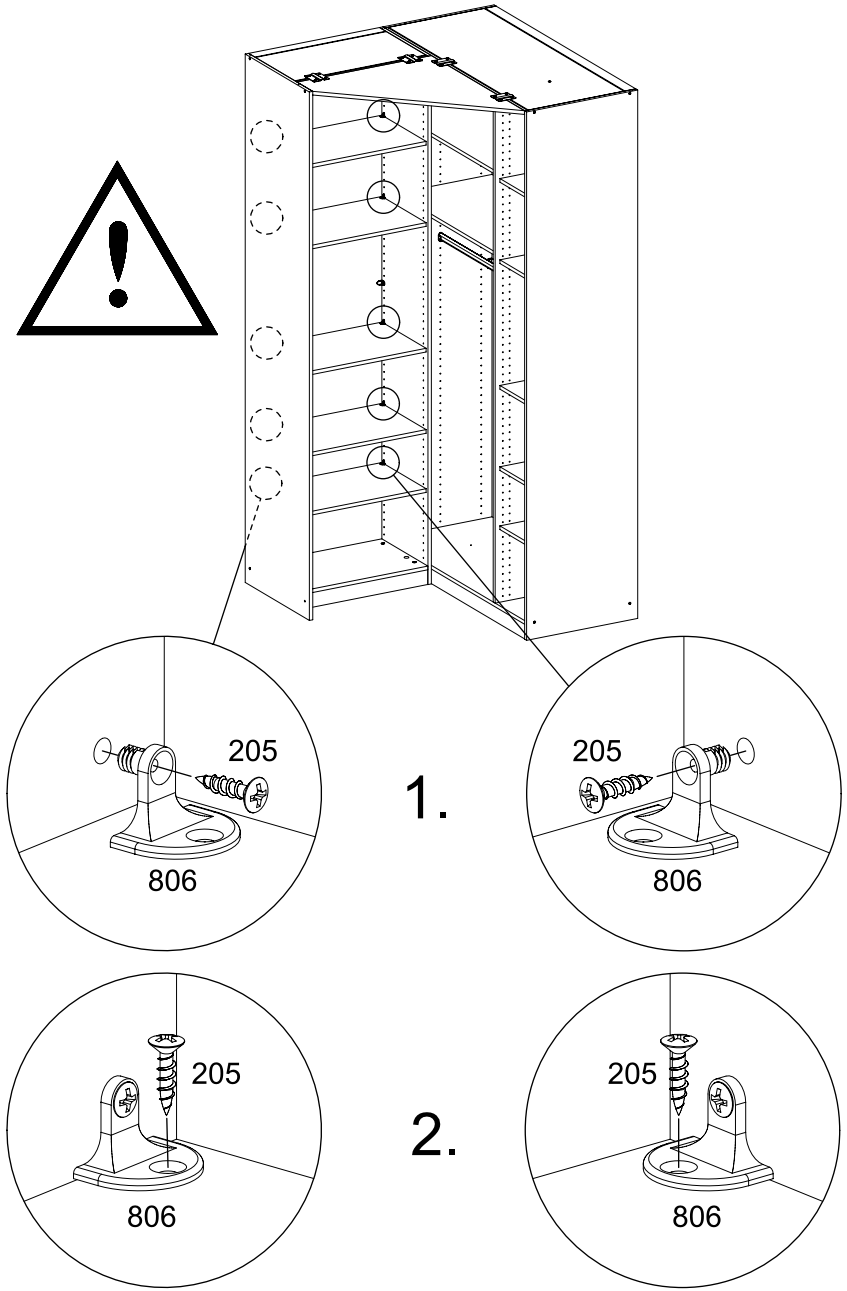

34

3x 12 55x16x6,2

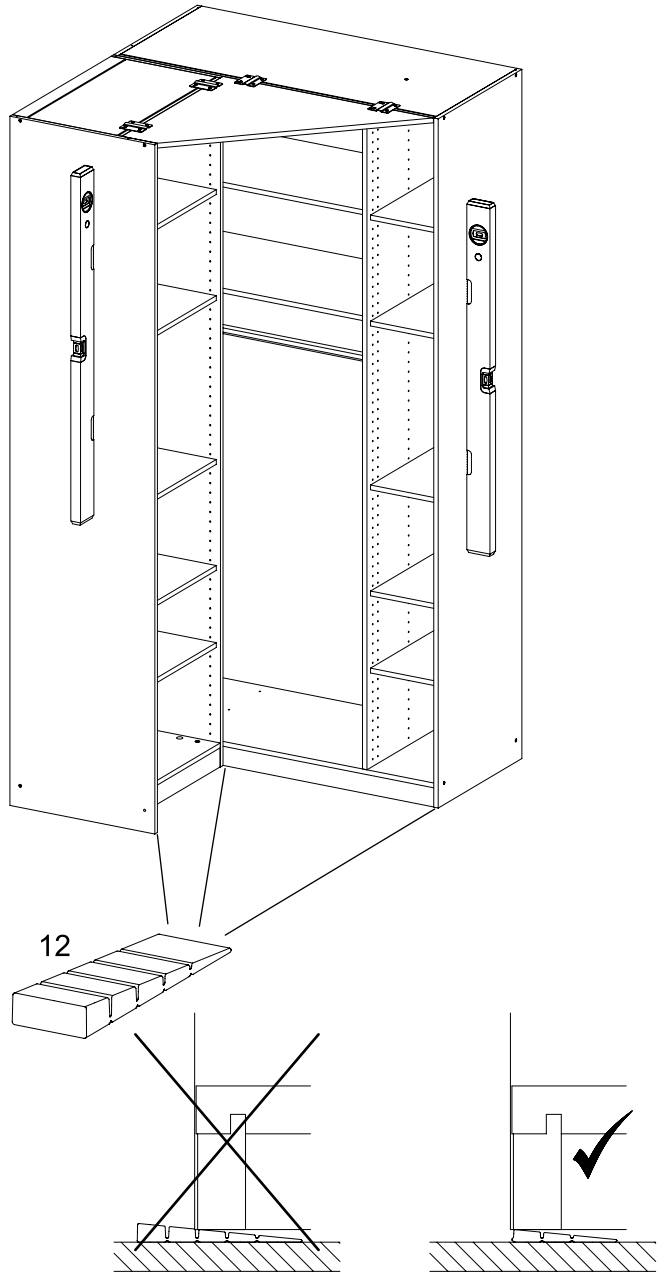

35 4x 45

PZ2

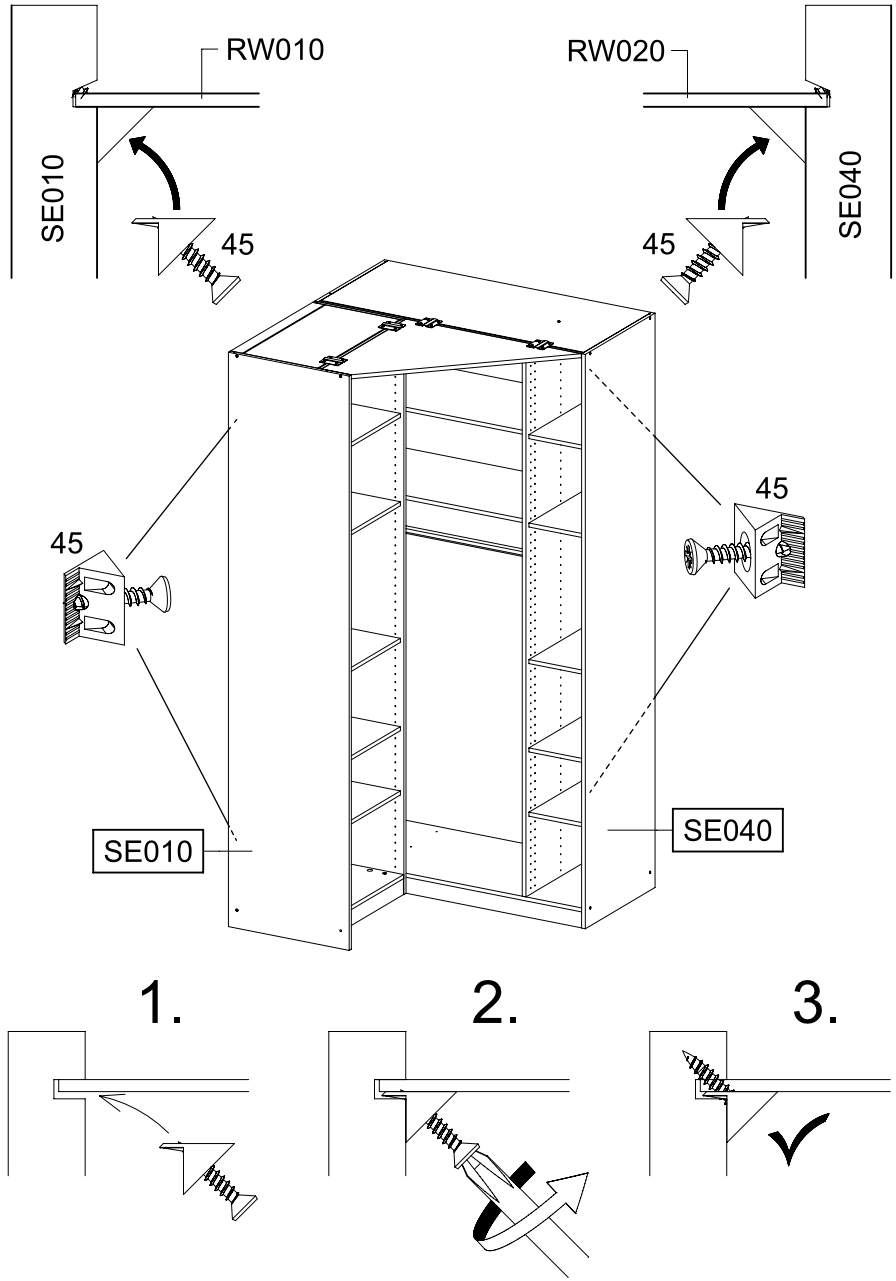

36 8x 201 4x15

PZ2

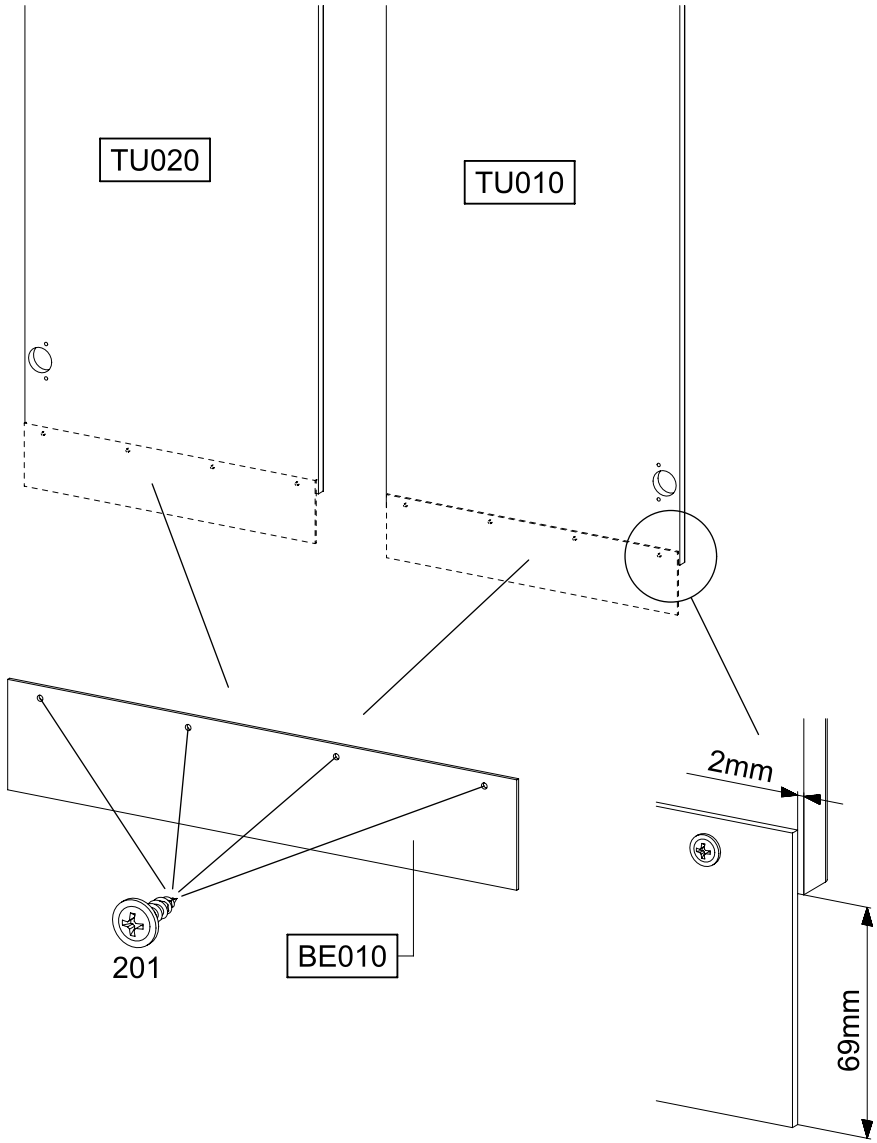

37

1377

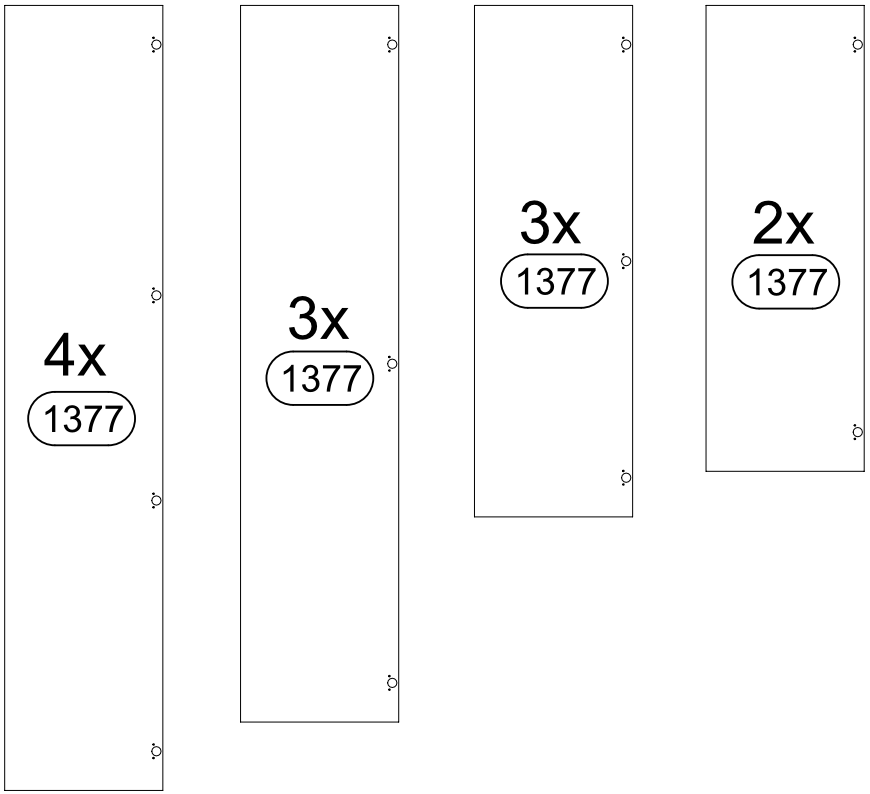

38

8x 1377

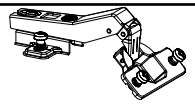

PZ2

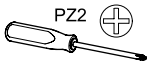

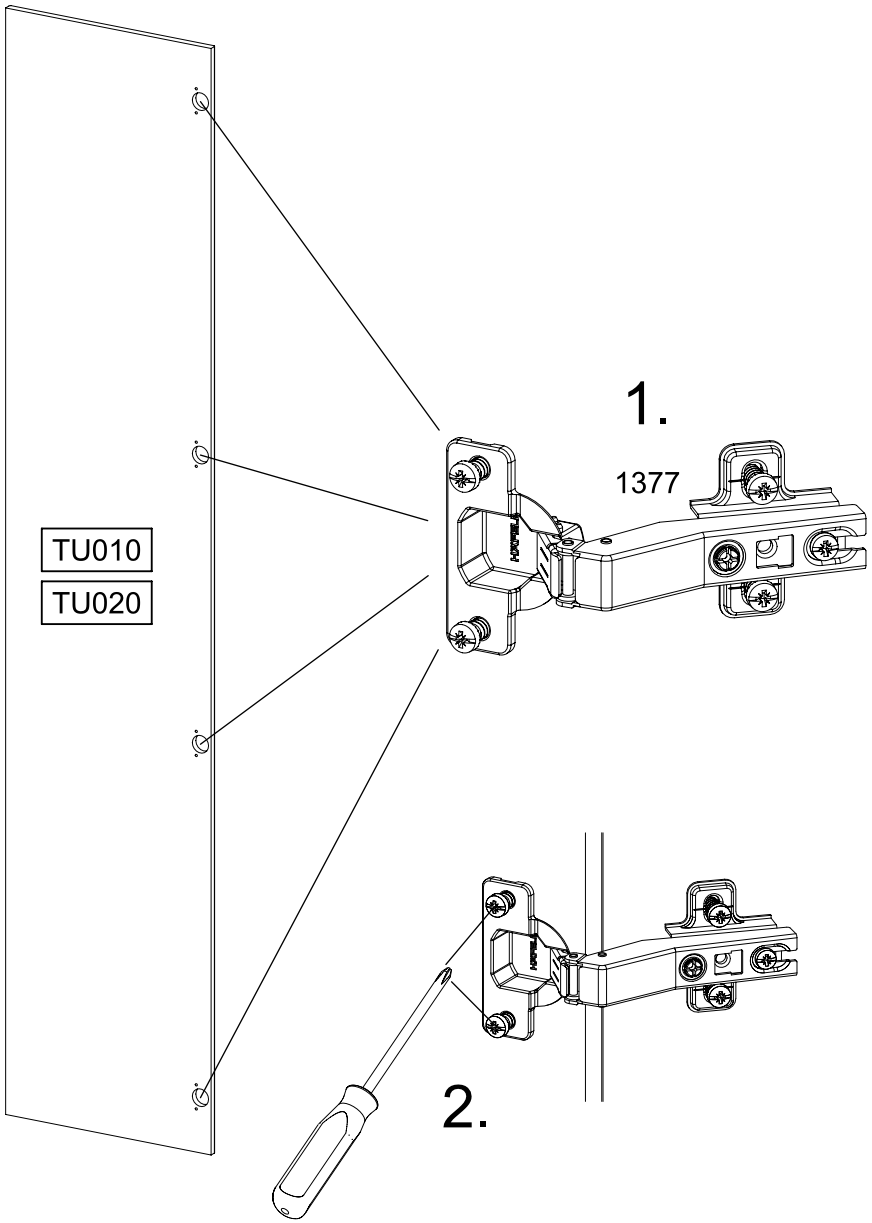

39

PZ2

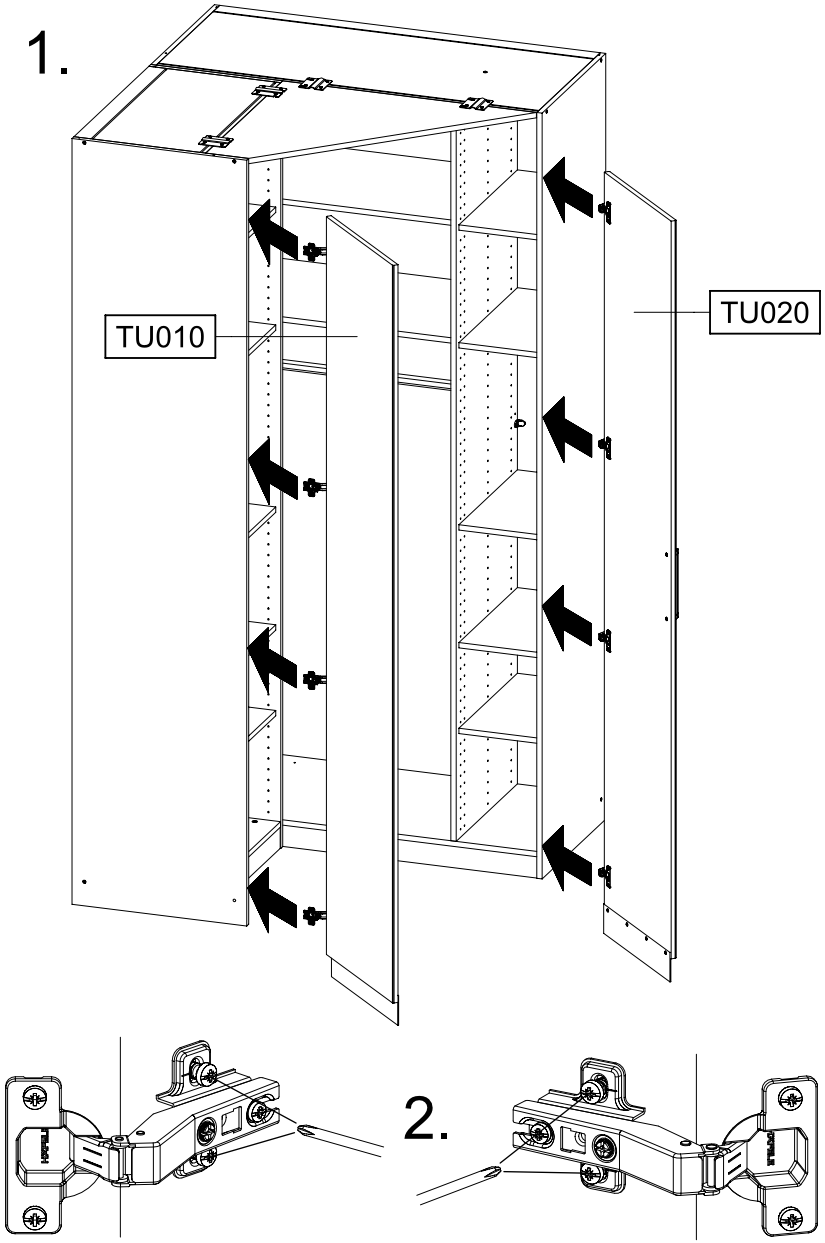

40

PZ2

VIDEO

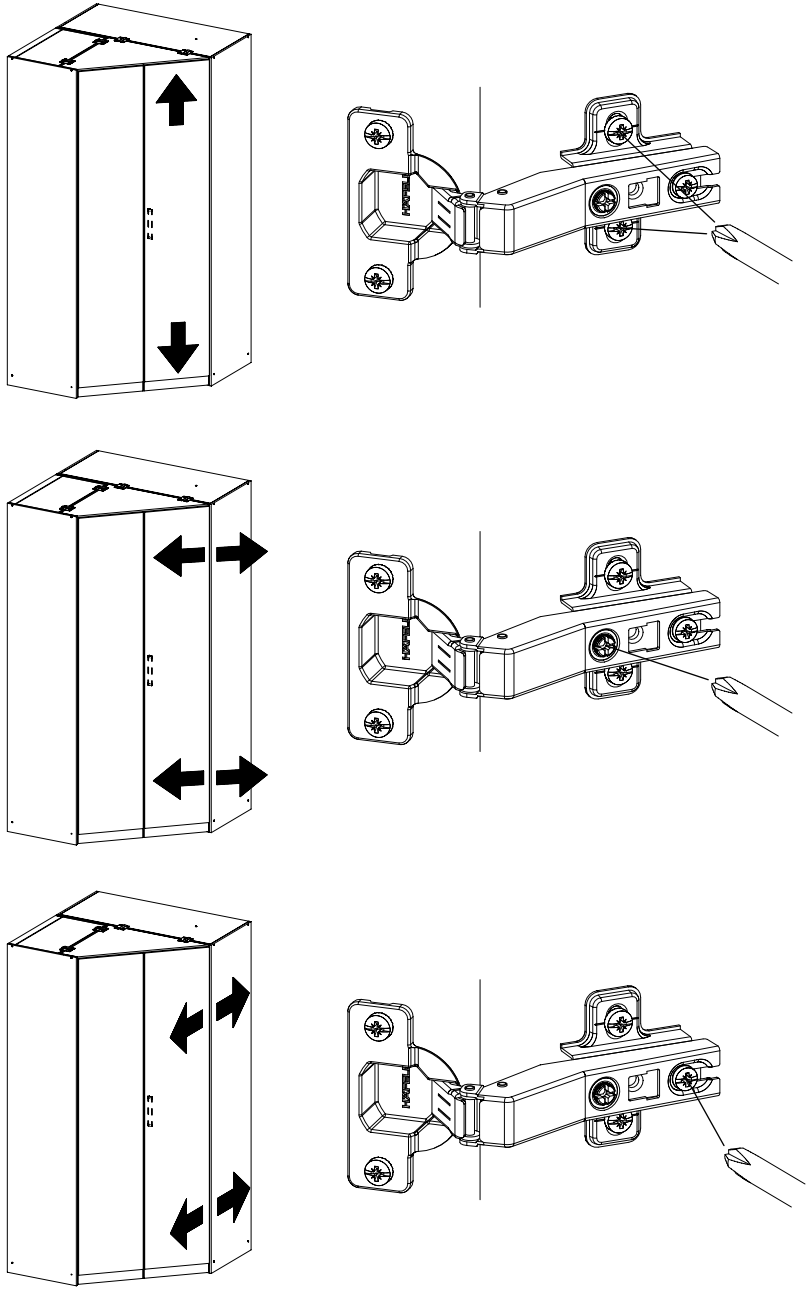

41

8x 213 4x30

PZ2

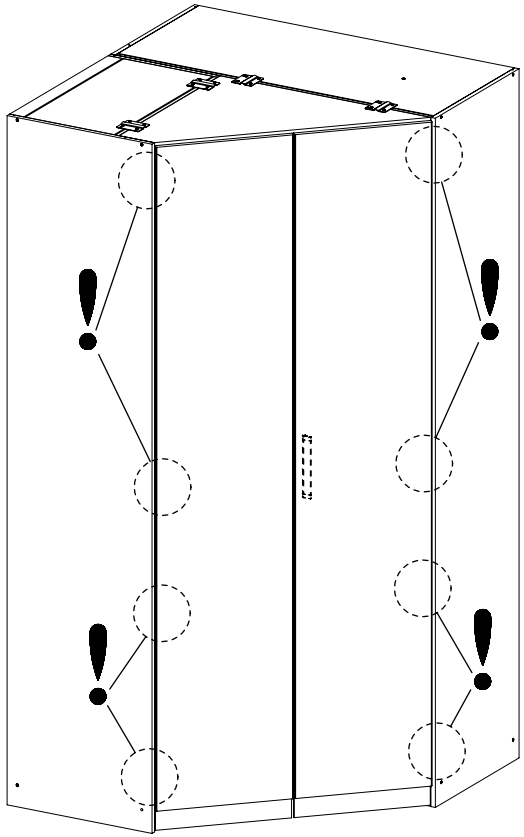

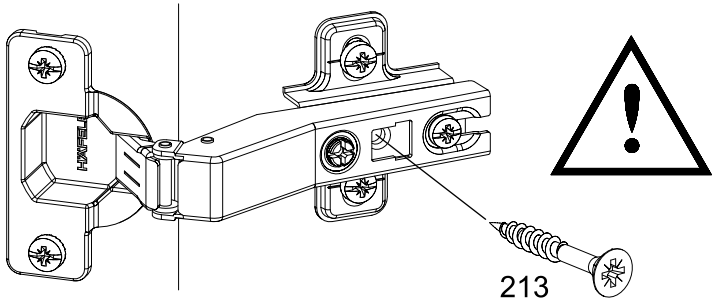

42

1x RE010

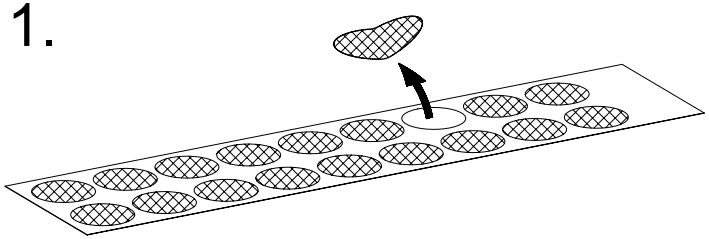

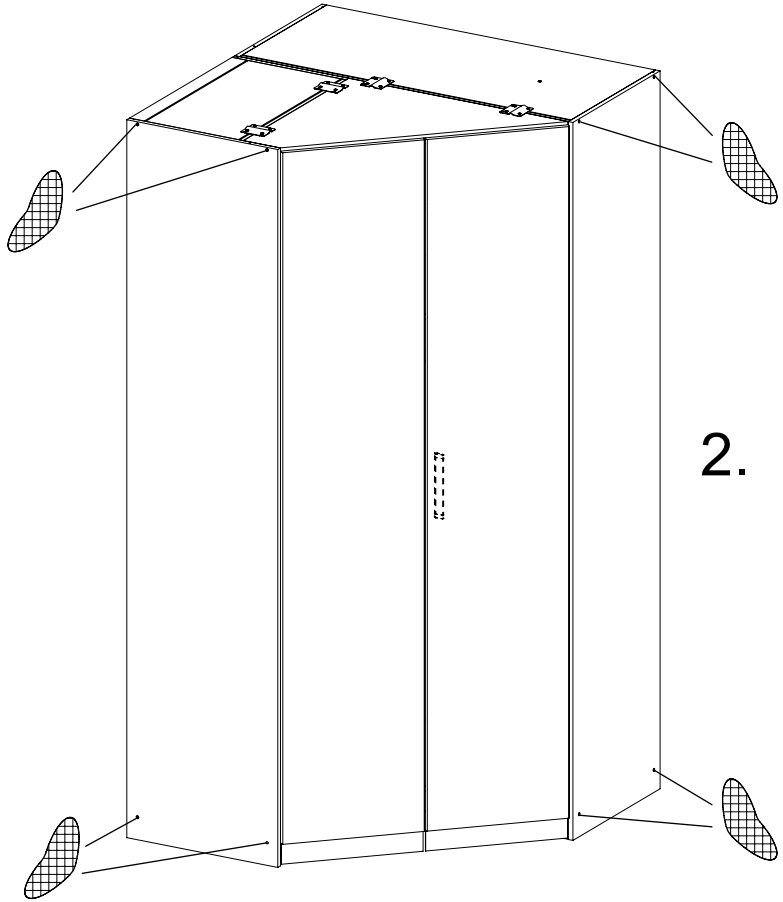
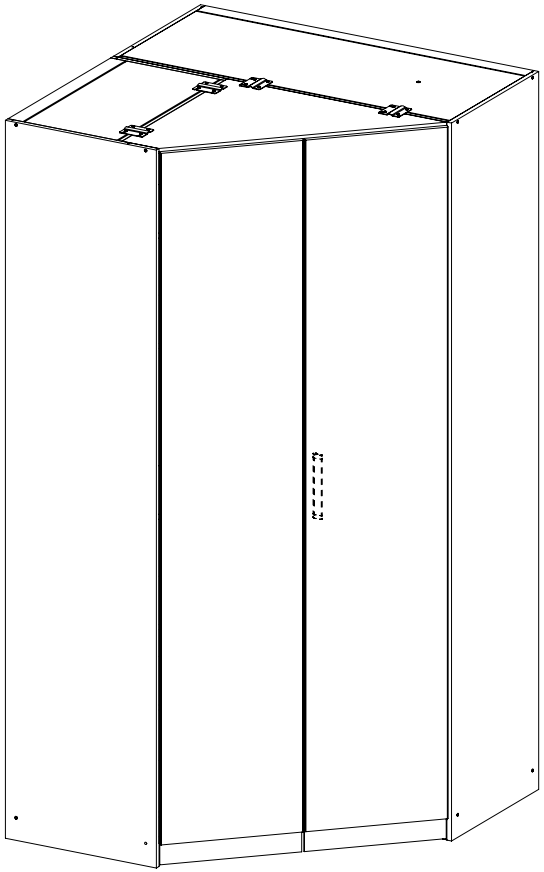
TOOLBOX