13520016/04

BDSK Handels GmbH & Co. KG
Mergentheimer Straße 59
DE-97084 Würzburg
Germany

22
PAP

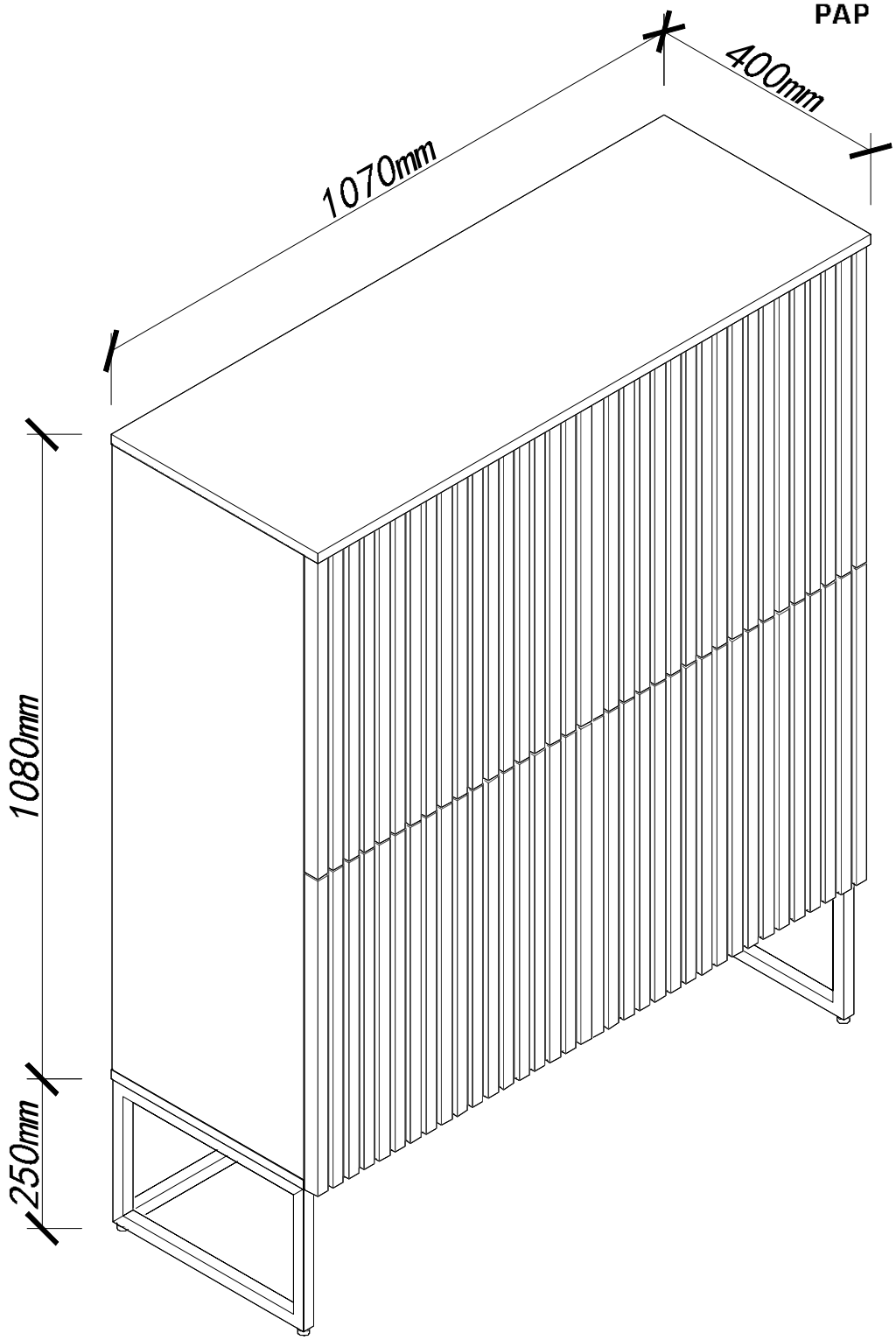

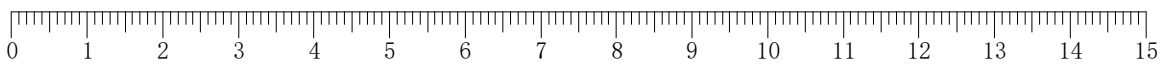

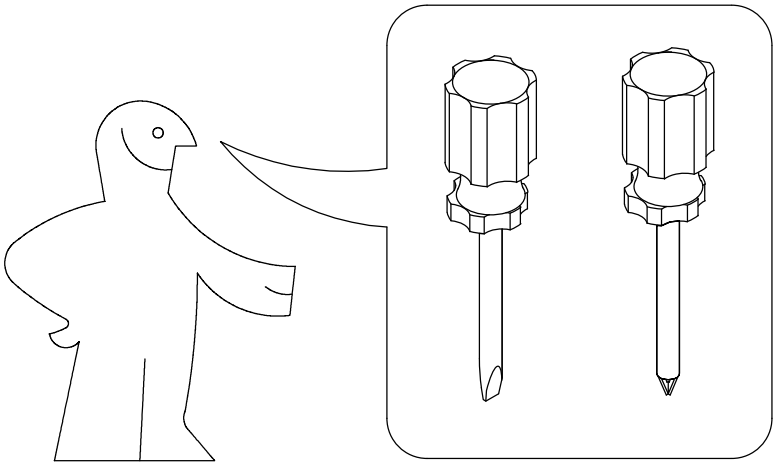

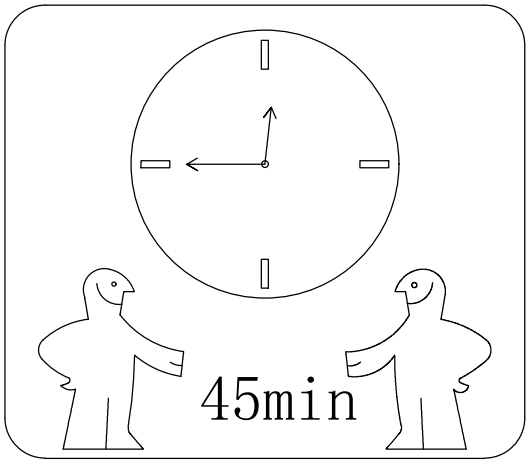
45min

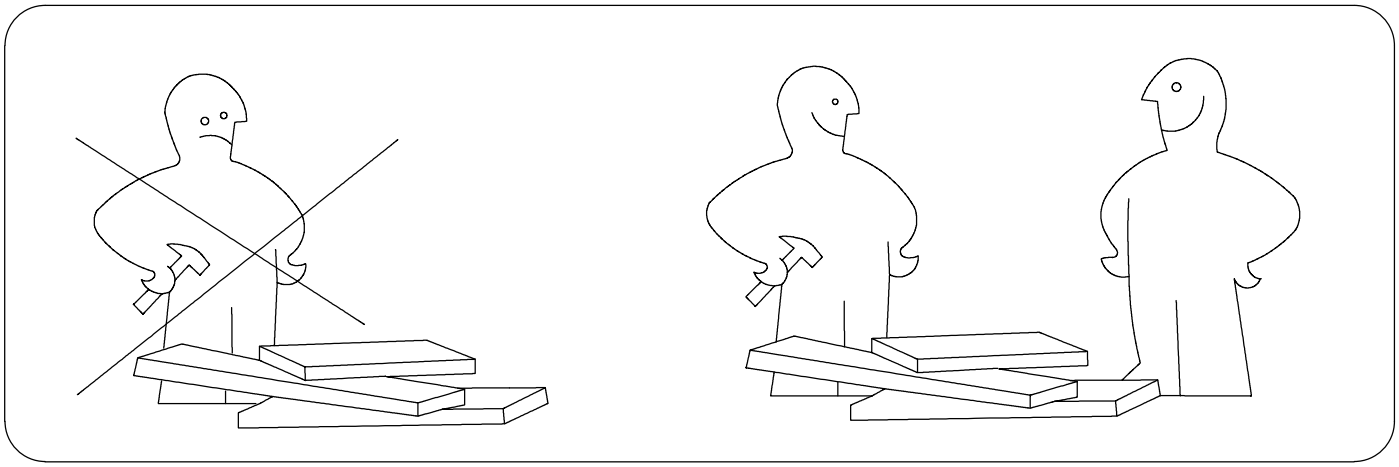

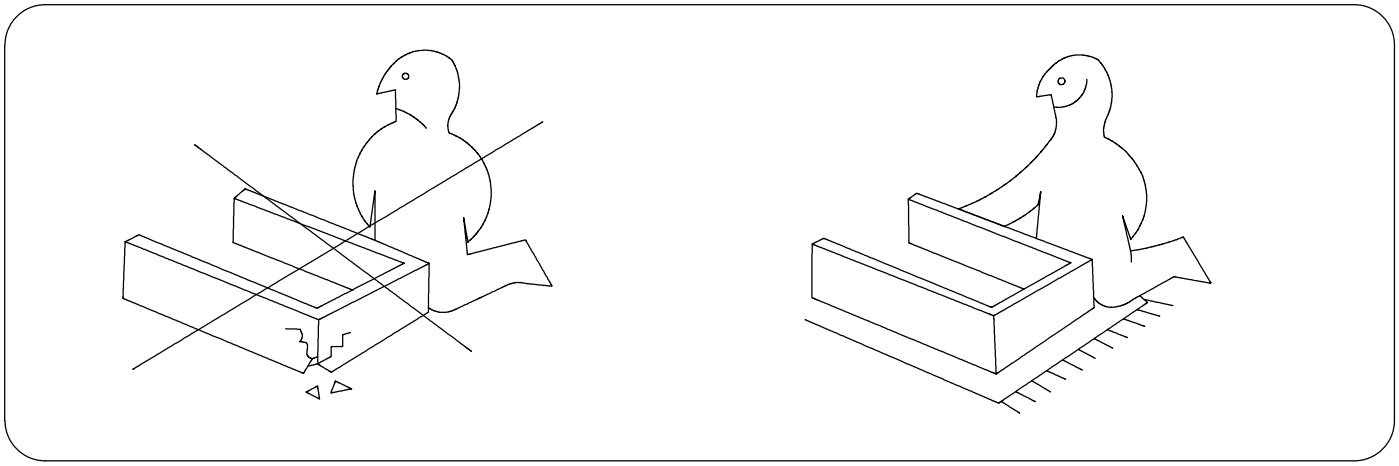

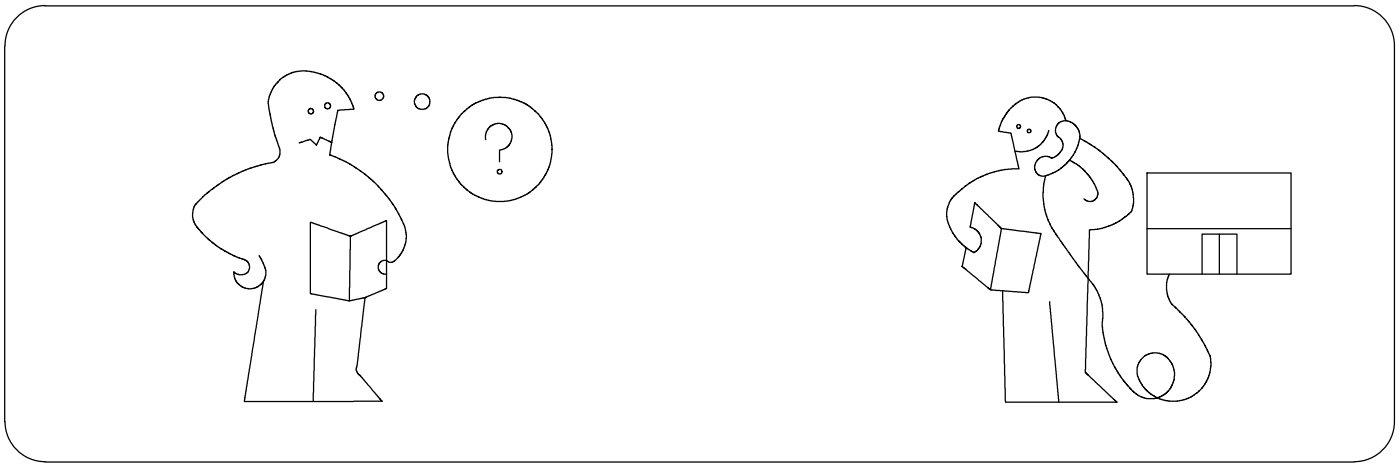
?

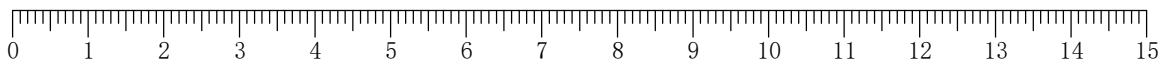
0 1 2 3 4 5 6 7 8 9 10 11 12 13 14 15

1	1070*400*16	1x
2	1070*372*16	1x
3	1048*371*16	1x
4	1048*371*16	1x
5	1048*371*16	1x
6	510*370*16	1x

7	510*370*16	1x
8	507*340*16	4x
9	526*520*5	2x
10	526*520*5	2x
11	529*530*25	4x

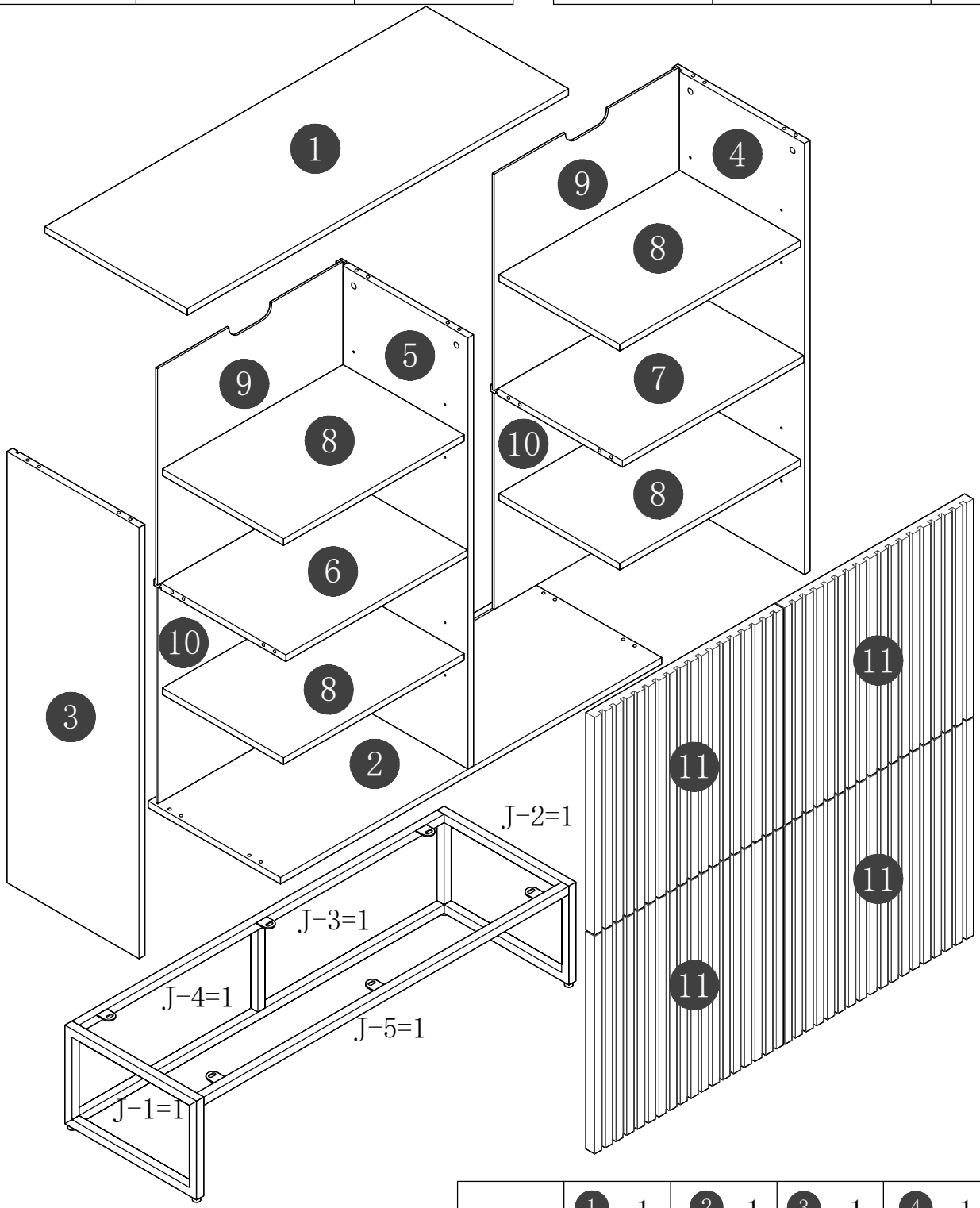

1/3	1 x1	2 x1	3 x1	4 x1	5 x1
	J-3x1	J-4 x1	J-5x1		
2/3	9 x2	10 x2	11 x4		
3/3	6 x1	7 x1	8 x4	J-1 x1	J-2x1

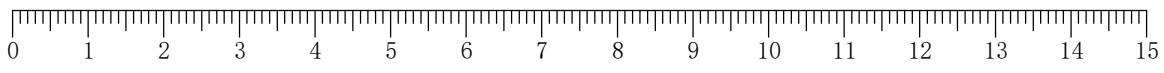

1/3

J-3=1	J-4=1	J-5=1
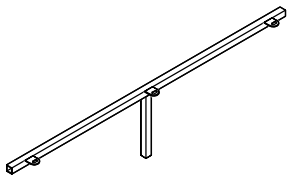	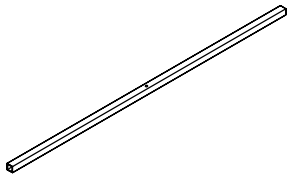	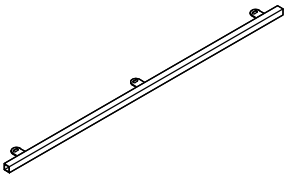

3/3

A=14	B=20	C=14	D=14	E=16	F2=2
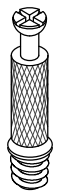	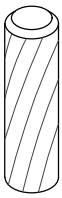	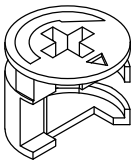		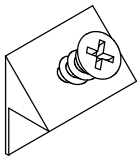	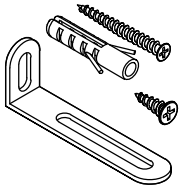
M6*40mm	Φ8*30mm	Φ15*12mm	Φ21mm		

G1=12	G2=1	H=1	I1=8	J-1=1
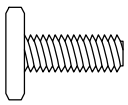	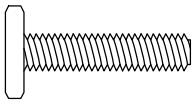		M4*16mm V2=6 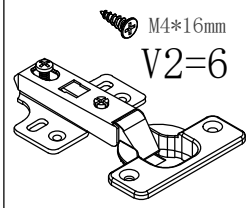	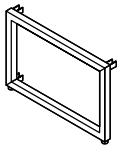
M6*16	M6*35mm	M4		

J-2=1	K=4	L=16	Q=6	Z1=6
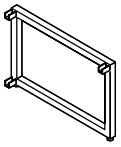	M3.5*12mm V1=2 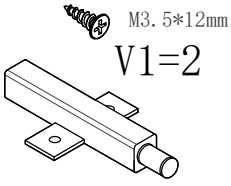	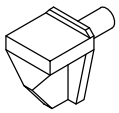	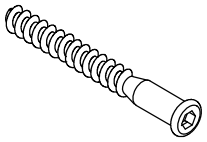	
			Φ7*48mm	Φ10*2.5mm

Z2=6

Φ13*1mm

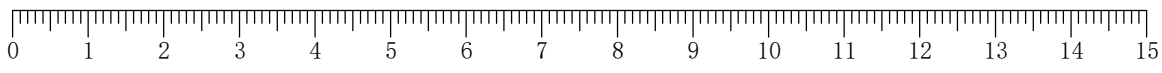

1

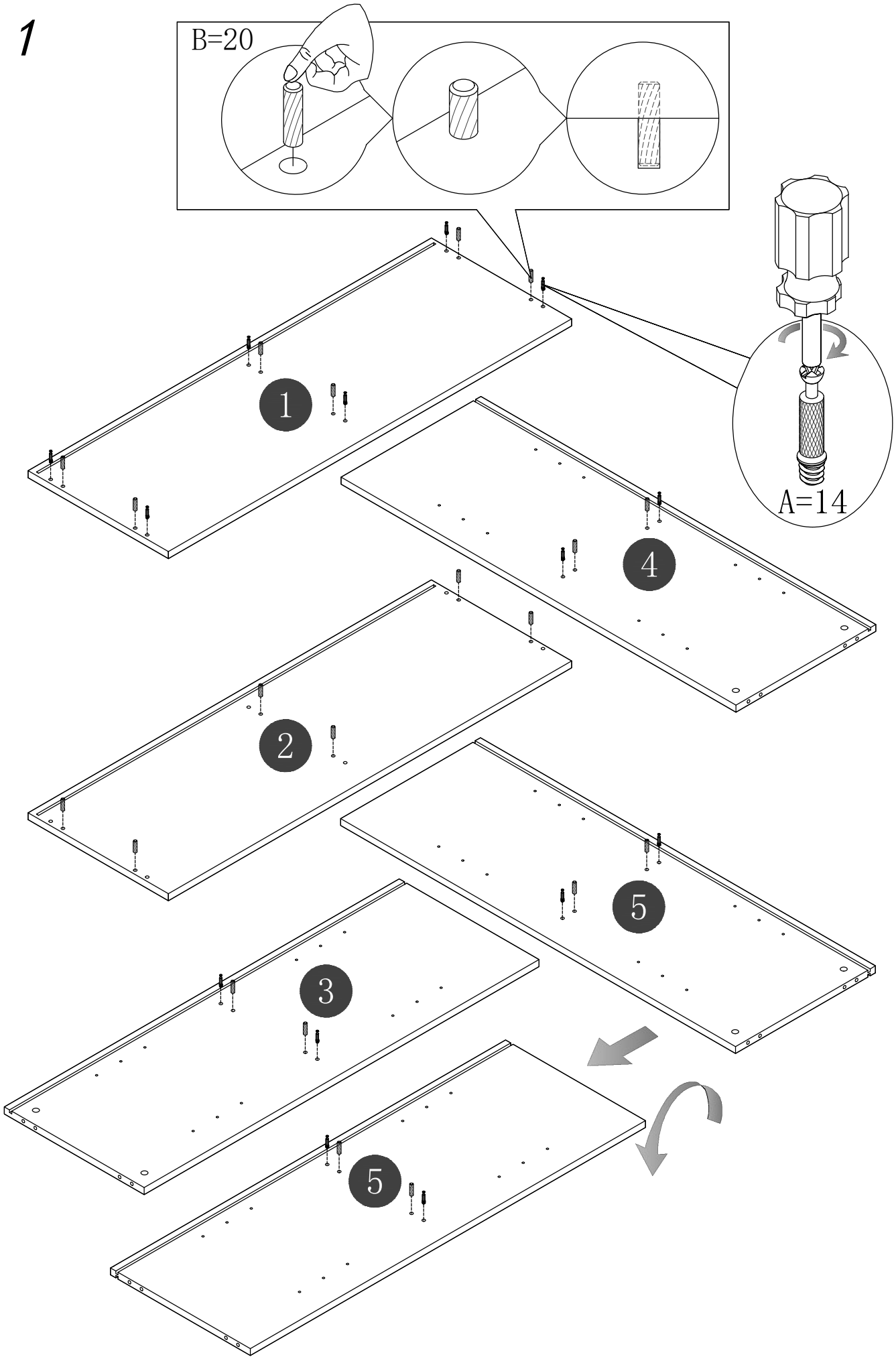

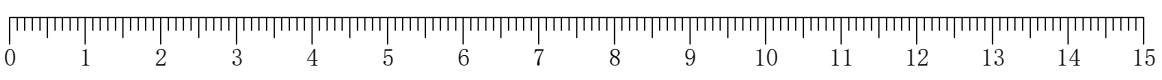

2

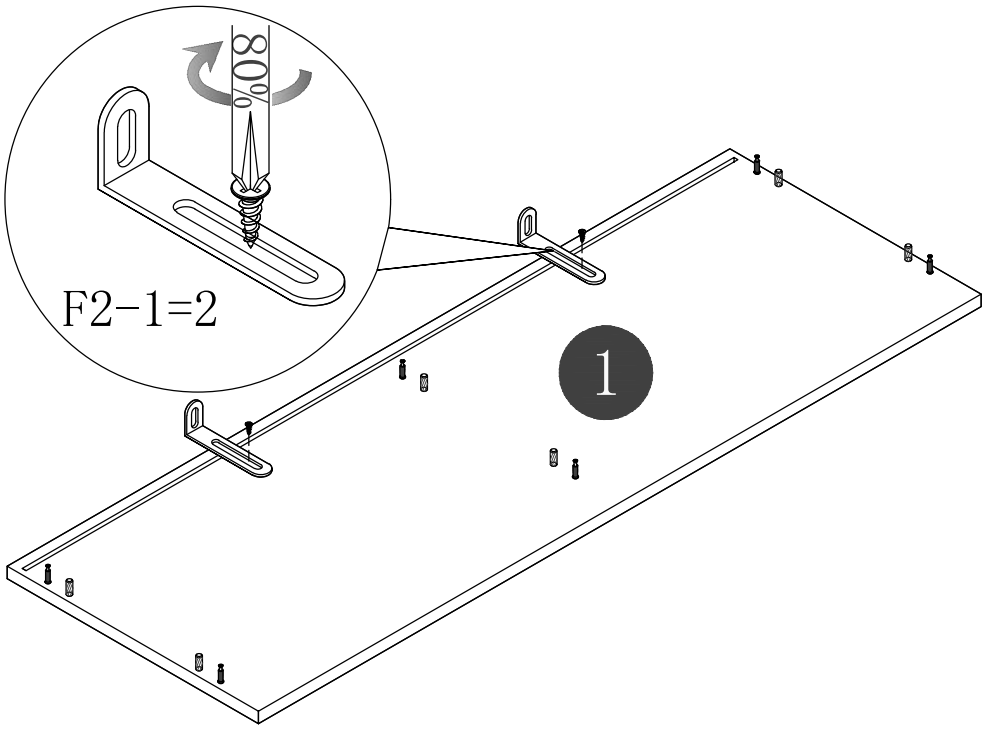

3

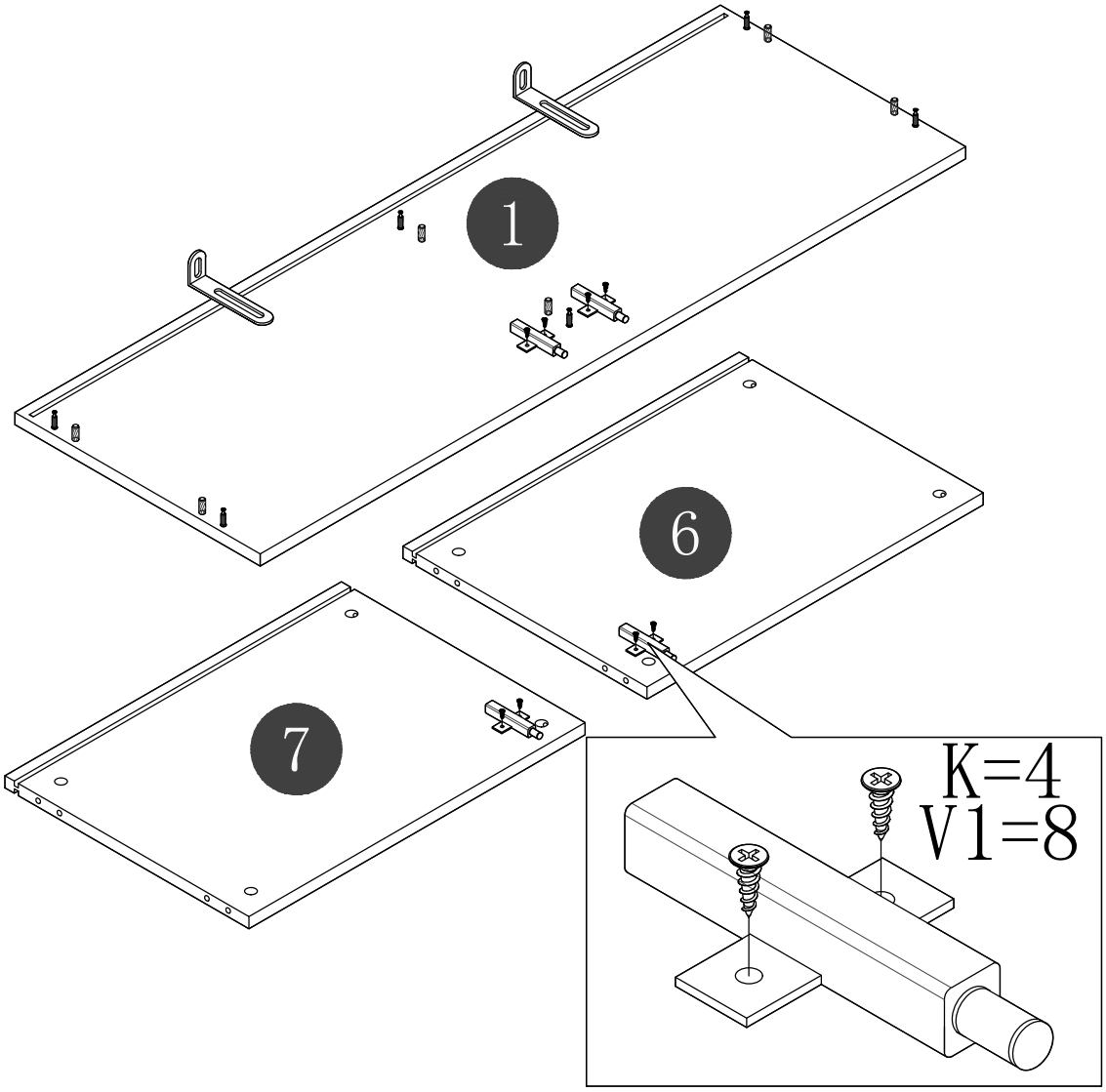

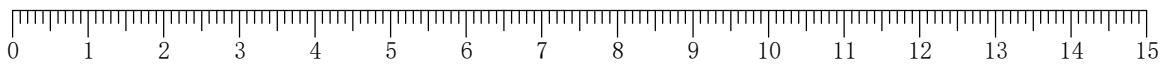

4

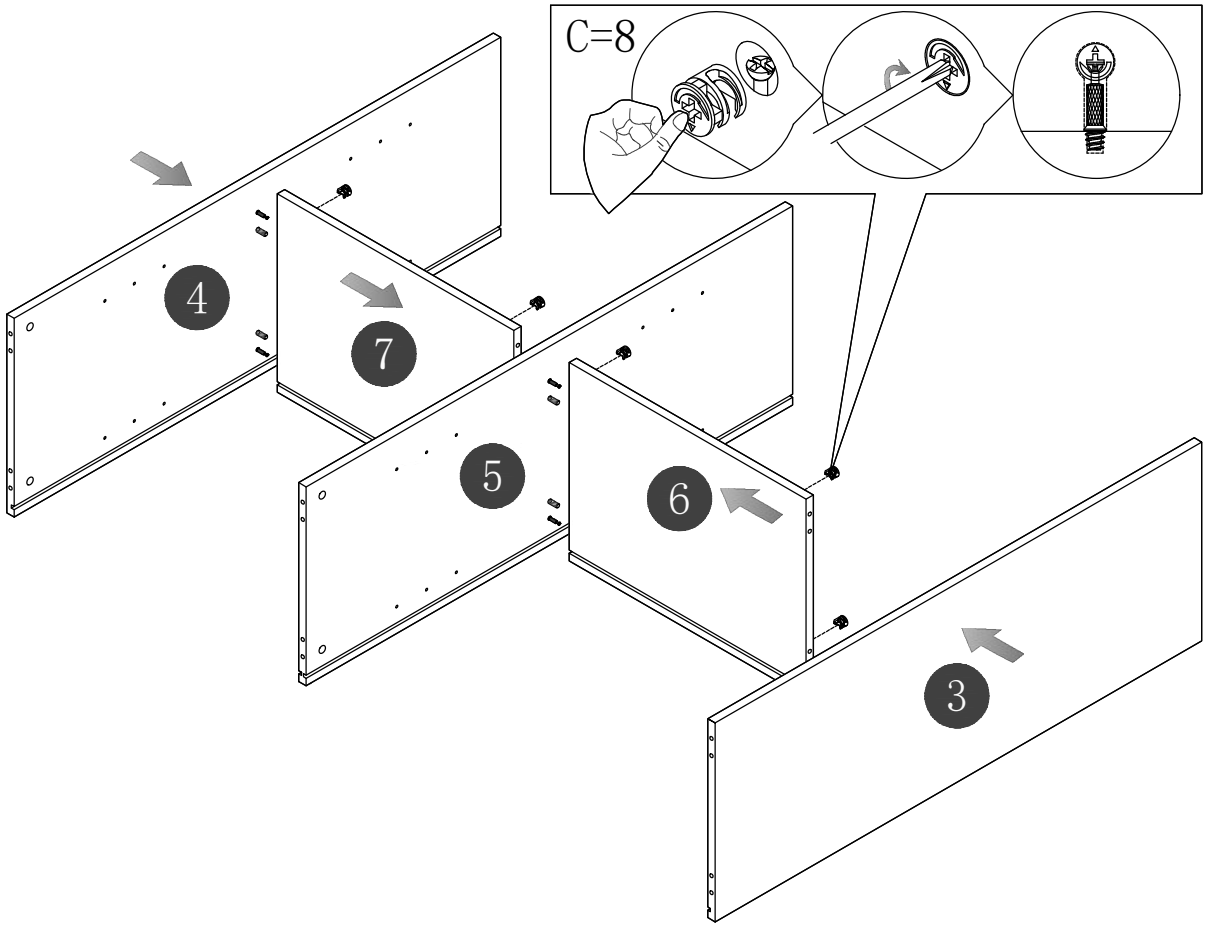

5

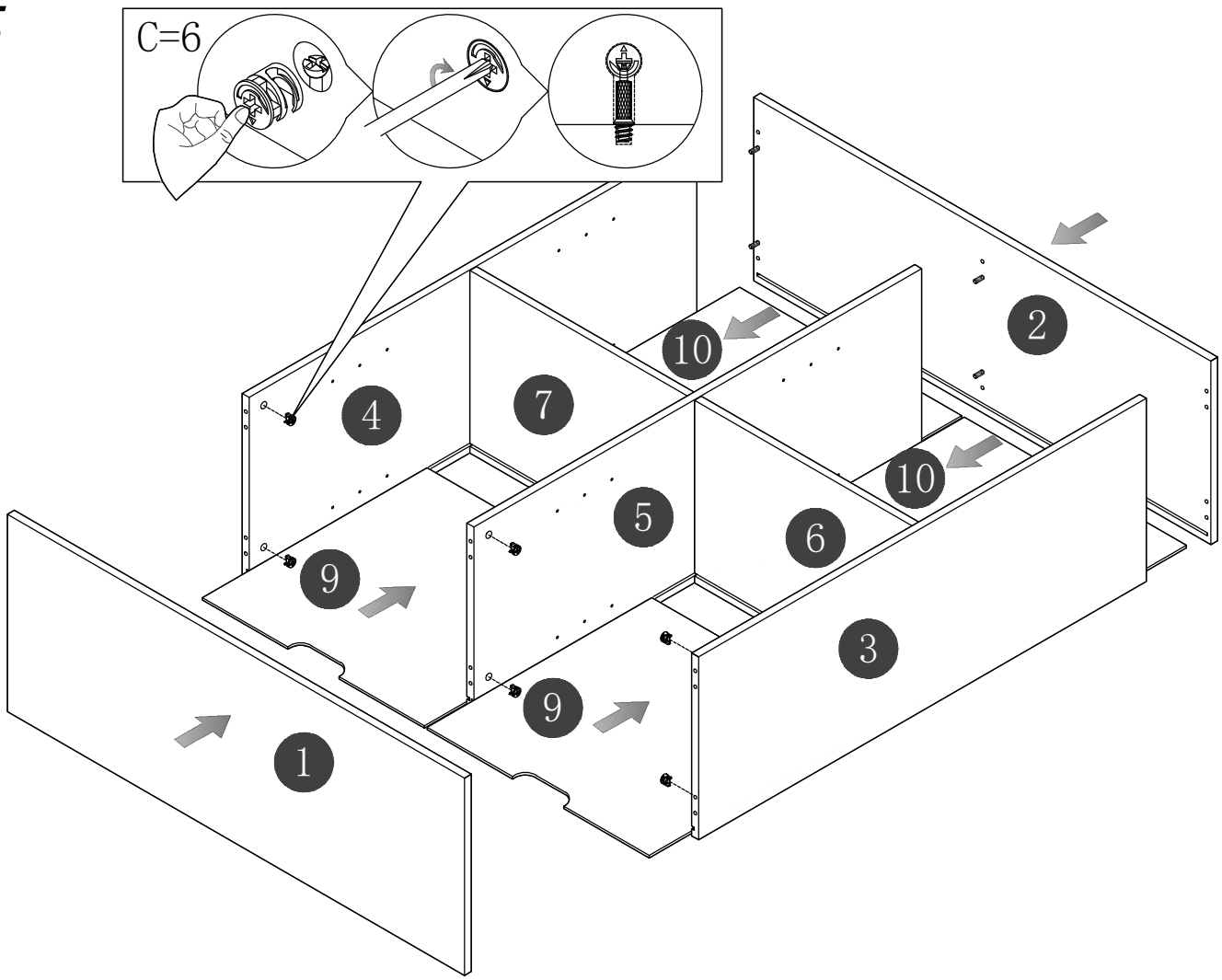

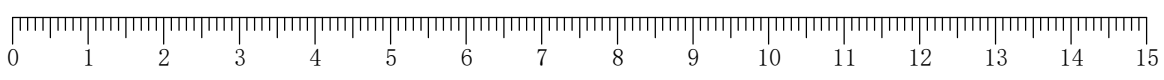

6

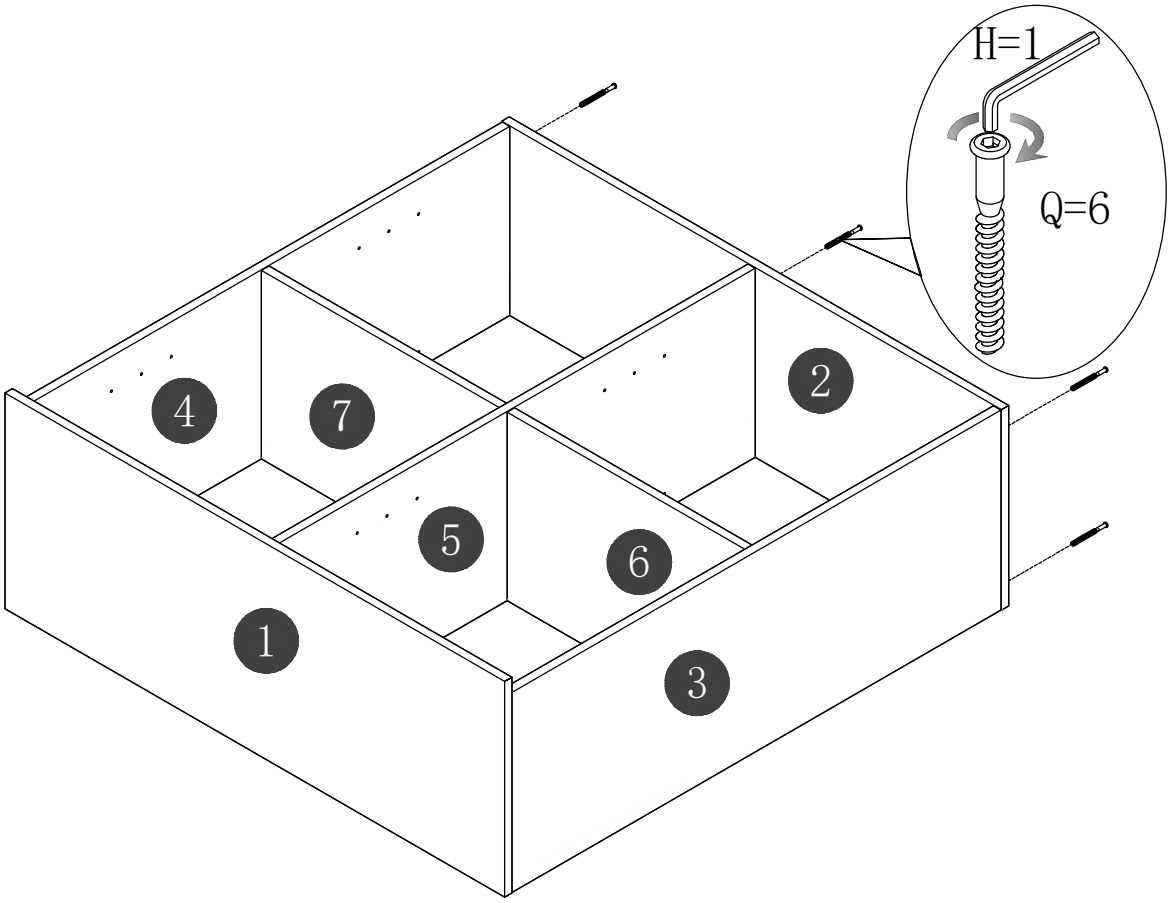

7

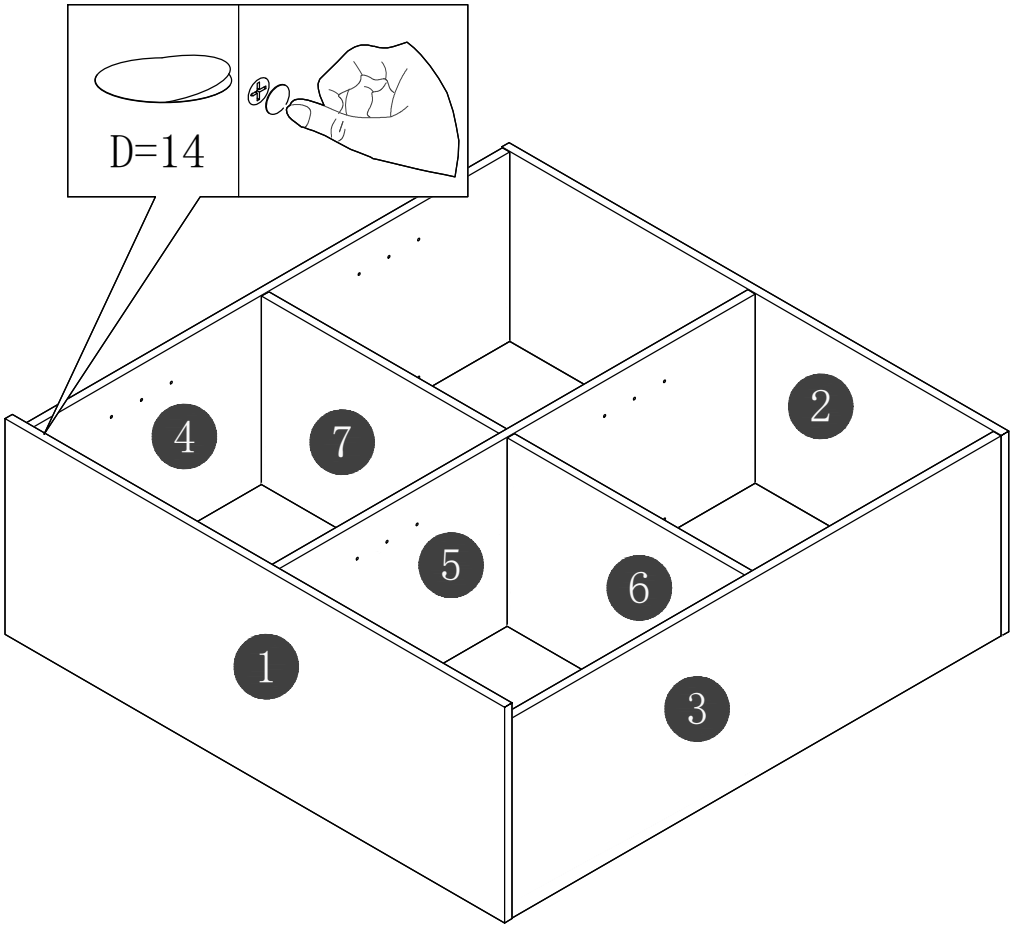

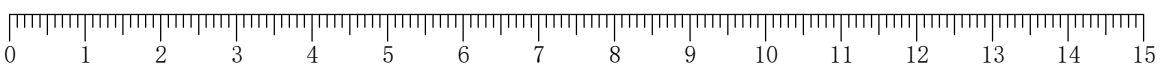

8

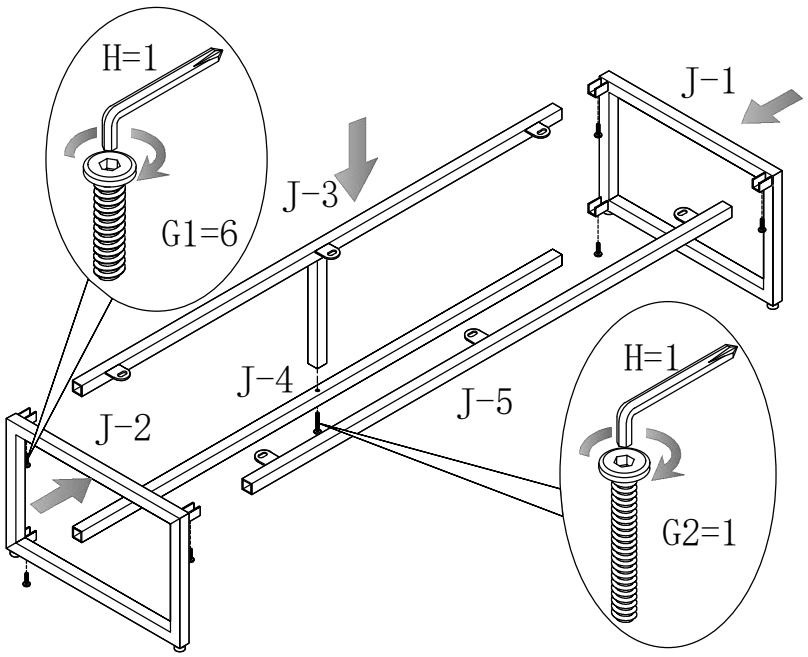
H=1
G1=6
J-3
J-1
J-4
J-5
J-2
H=1
G2=1

9

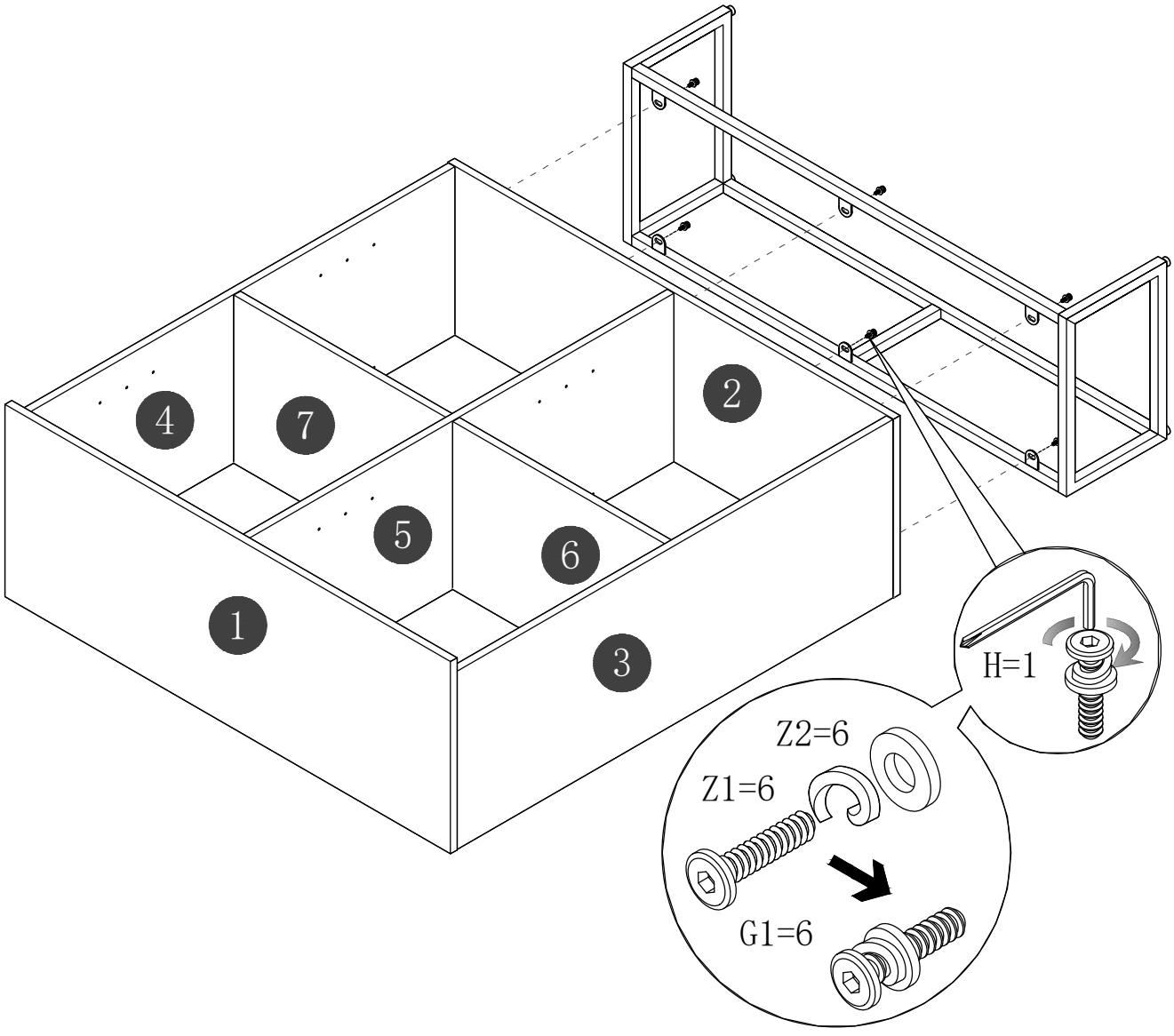
4
7
2
5
6
1
3
H=1
Z2=6
Z1=6
G1=6

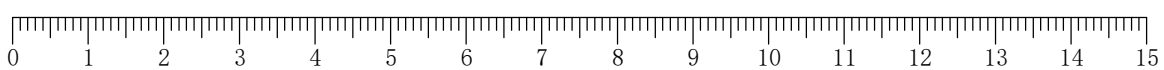
0
1
2
3
4
5
6
7
8
9
10
11
12
13
14
15

10

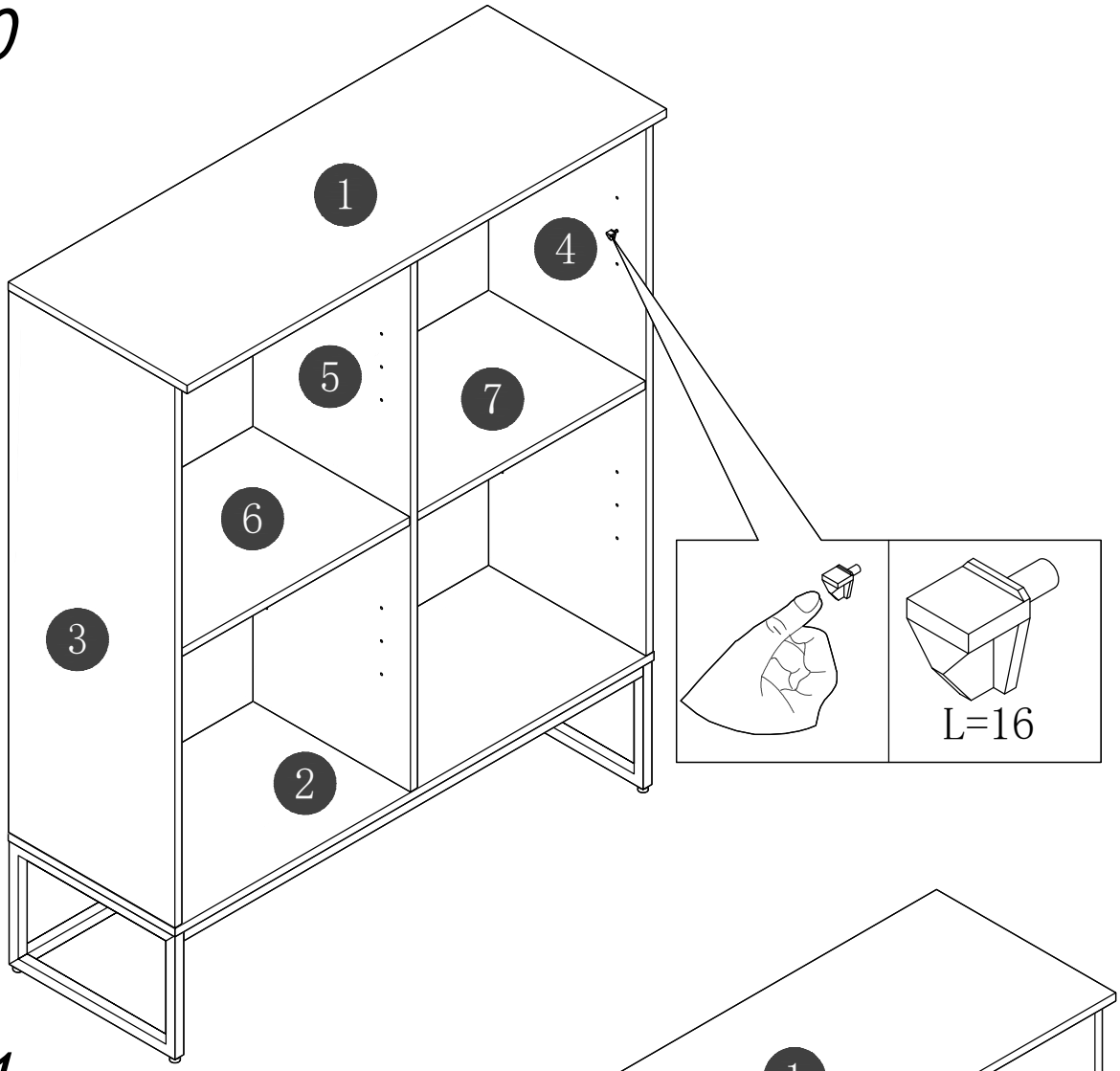

11

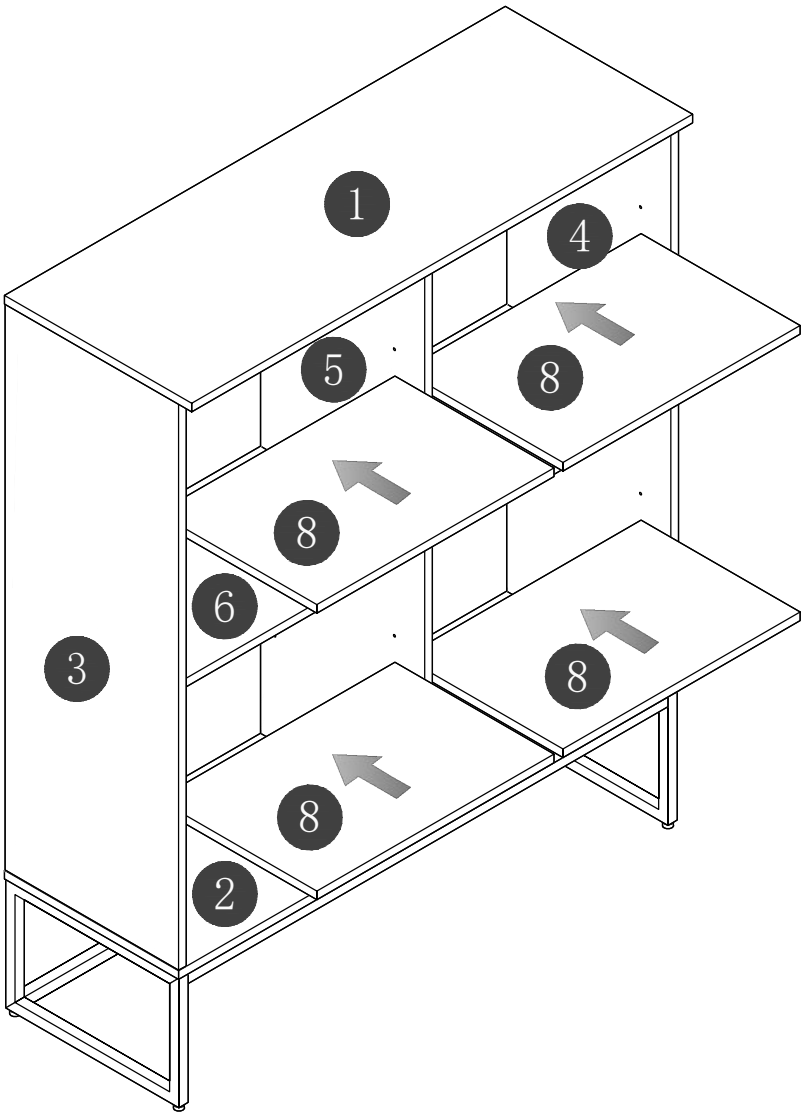

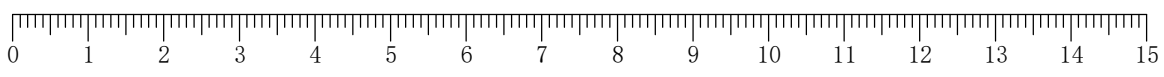

12

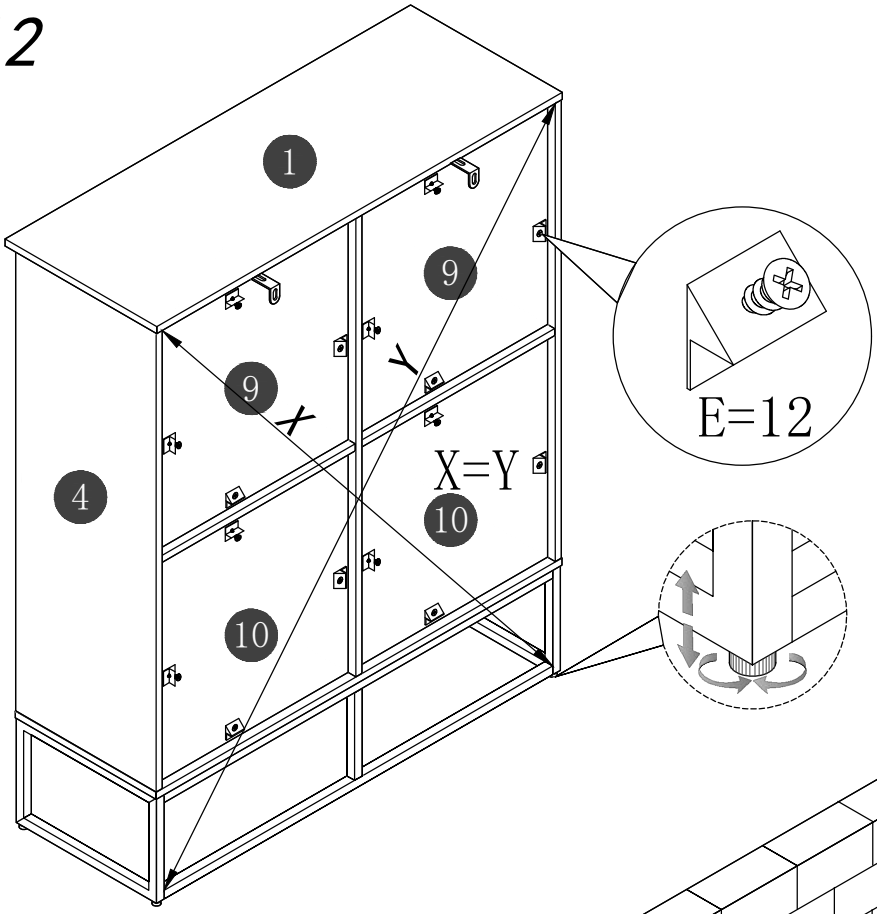
1
9
9
X
Y
X=Y
4
10
10
E=12

13

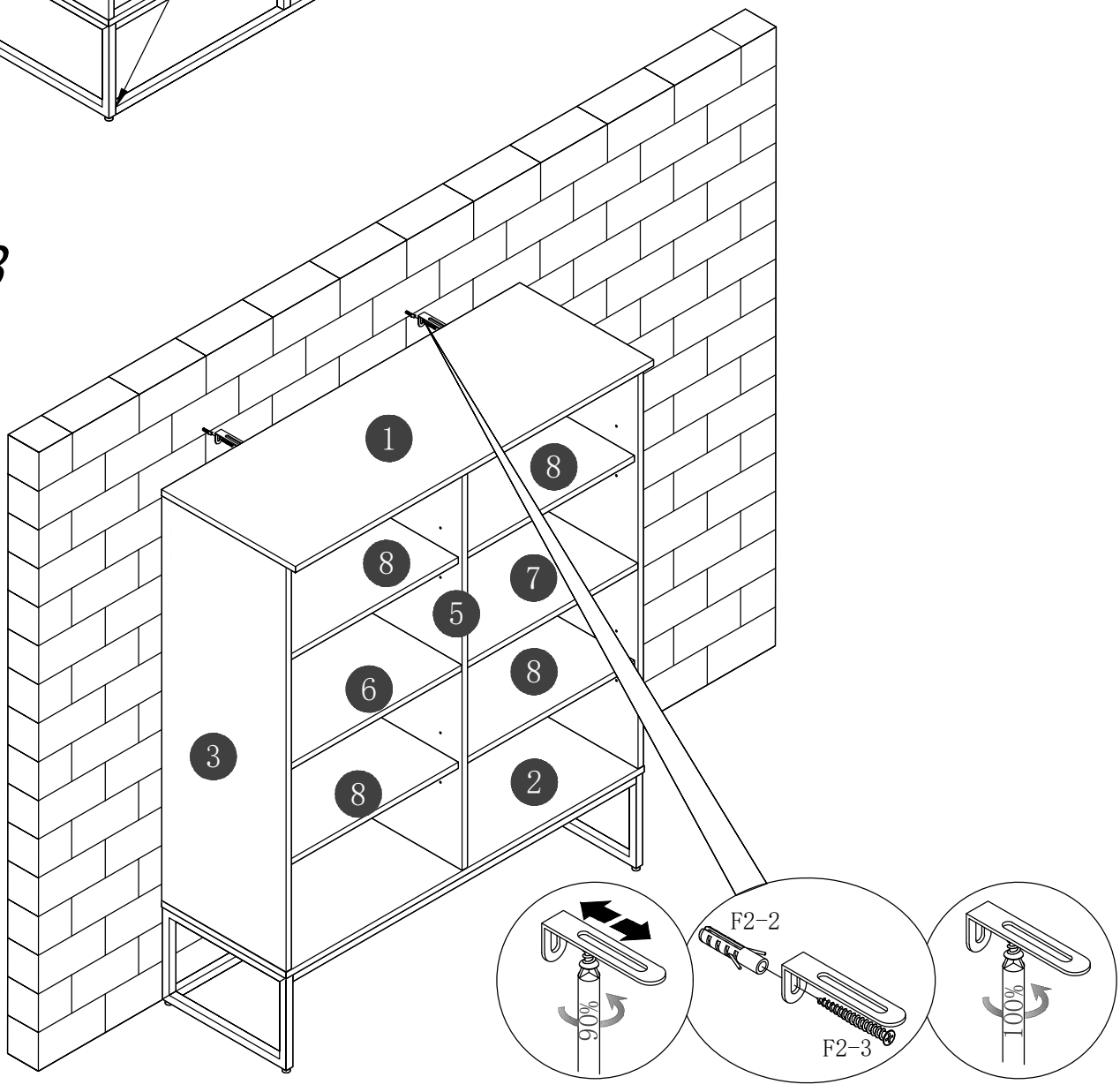
1
8
8
7
5
8
6
3
8
2
F2-2
F2-3
90°
100°

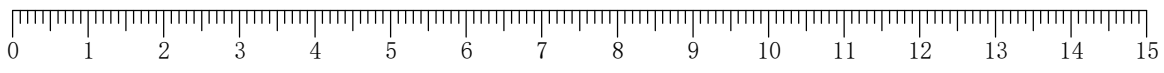
0
1
2
3
4
5
6
7
8
9
10
11
12
13
14
15

14

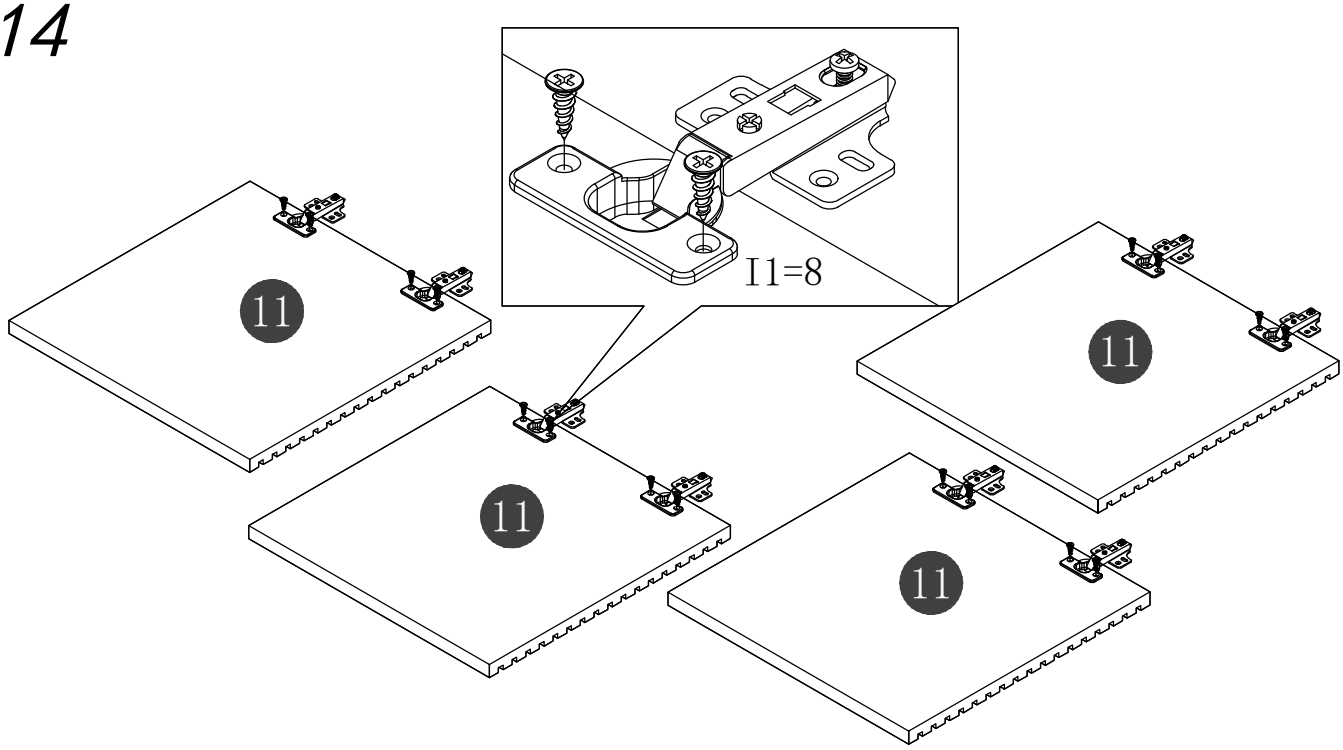
I1=8
11
11
11
11

15

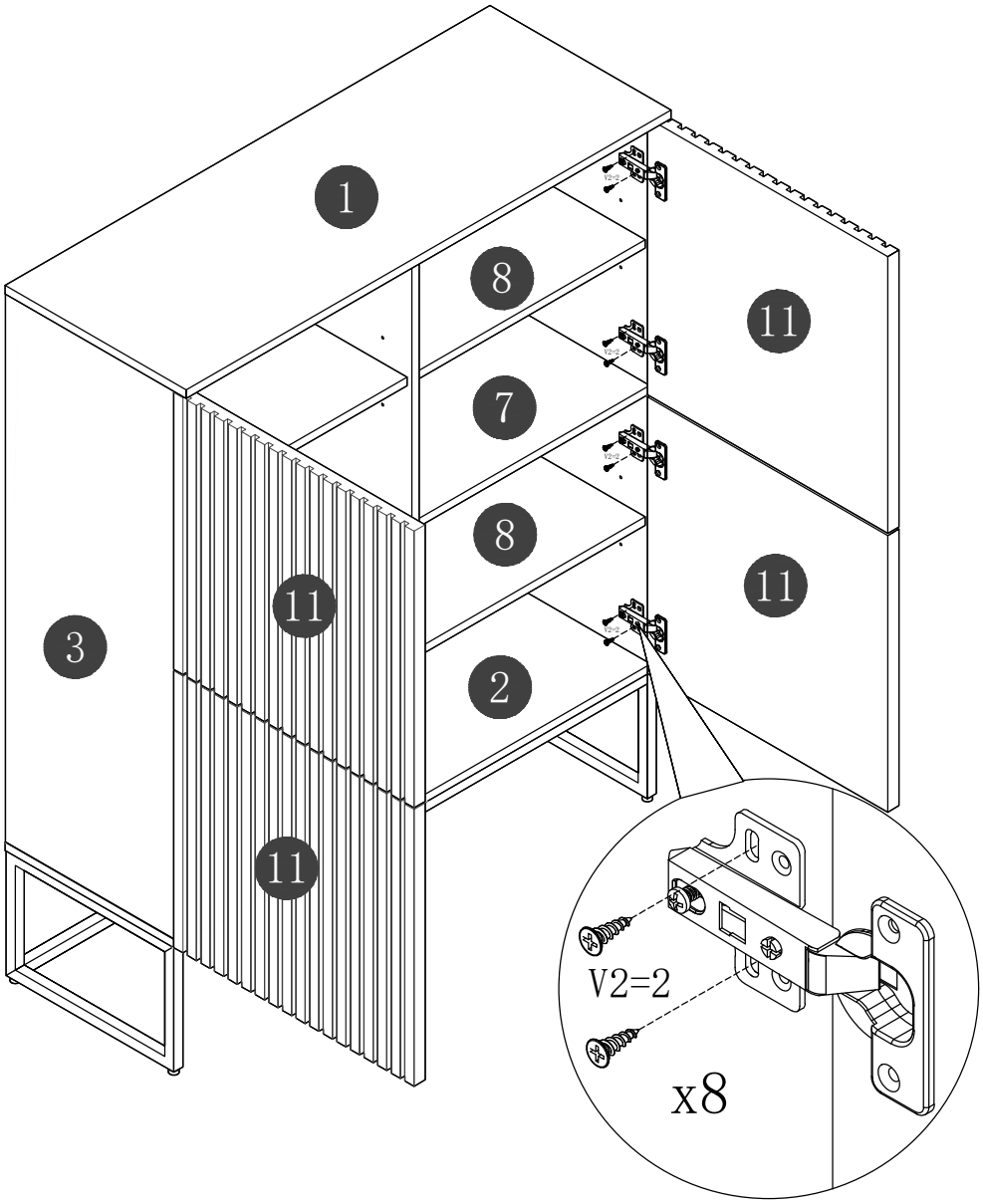
1
8
11
7
8
11
3
11
2
11
V2=2
x8

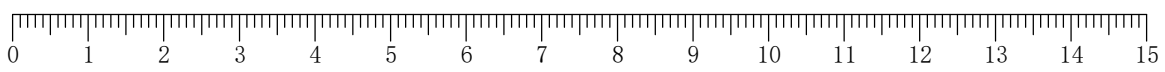
0
1
2
3
4
5
6
7
8
9
10
11
12
13
14
15

16

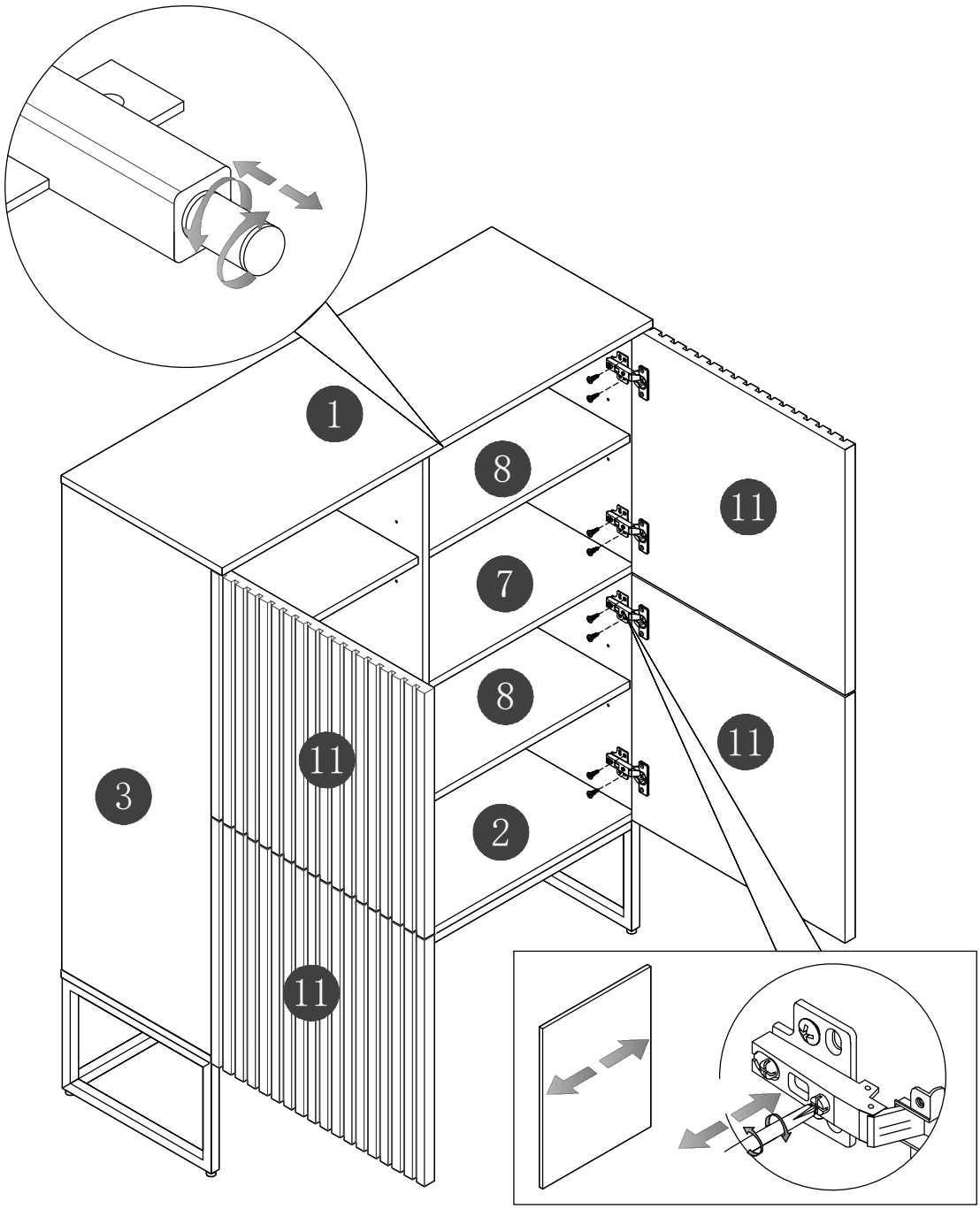
1
8
11
7
8
11
3
11
2
11

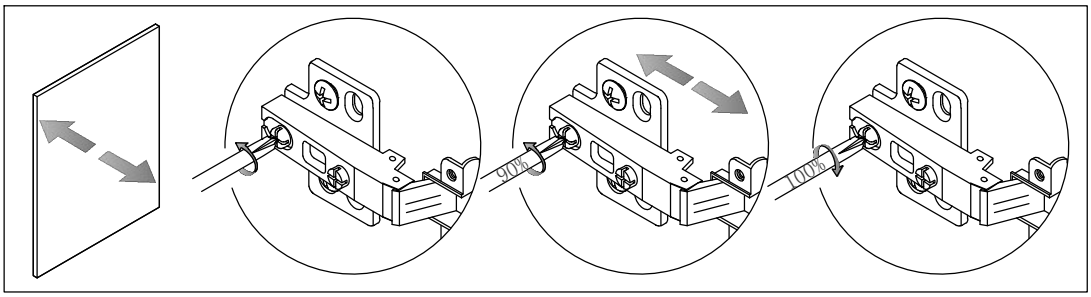
90°
100°

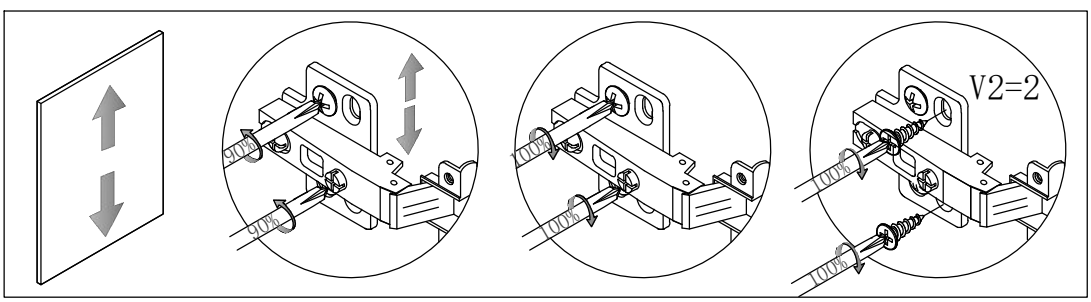
90°
90°
100°
100°
100°
100°
V2=2

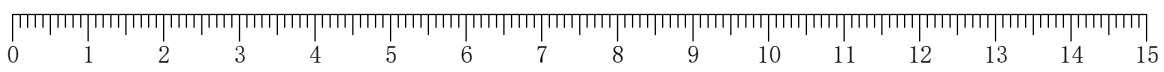
0
1
2
3
4
5
6
7
8
9
10
11
12
13
14
15

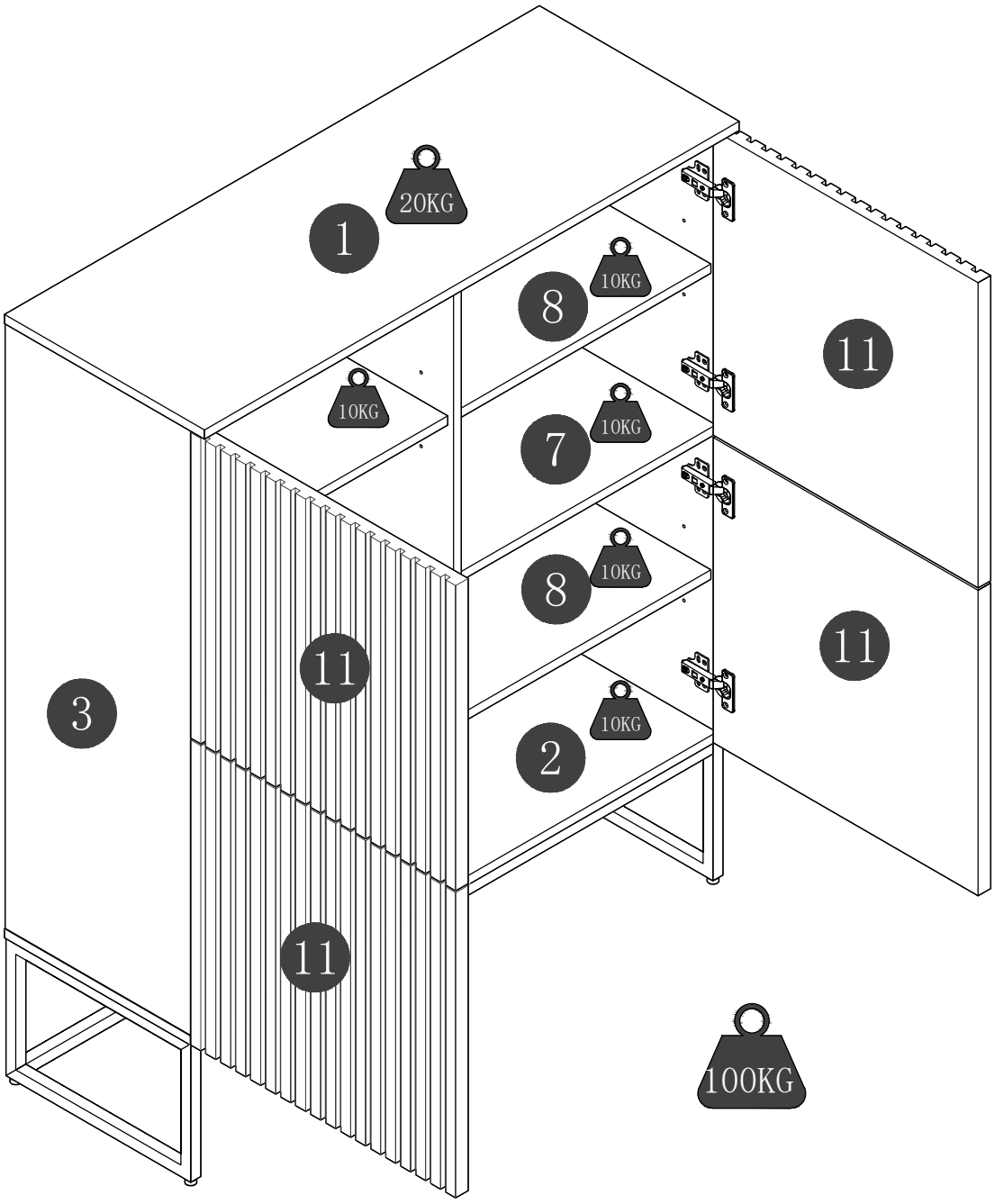
20KG
1
10KG
8
11
10KG
7
10KG
8
11
10KG
2
3
11
11
100KG

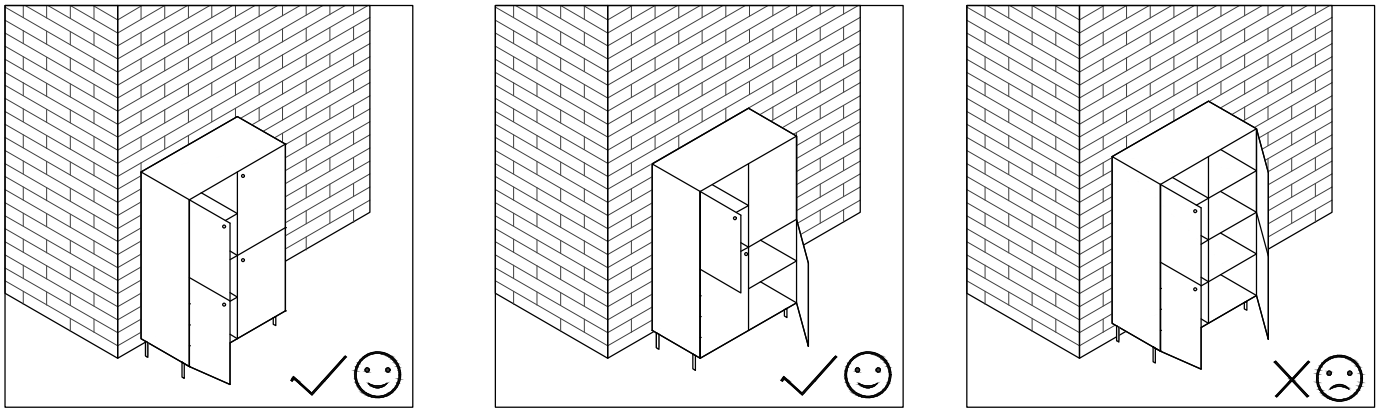


0 1 2 3 4 5 6 7 8 9 10 11 12 13 14 15