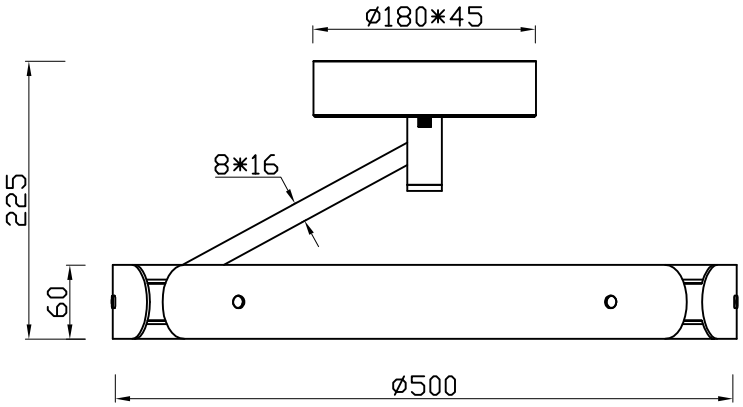

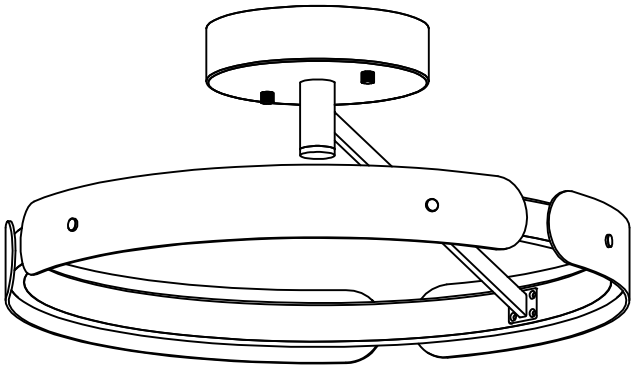

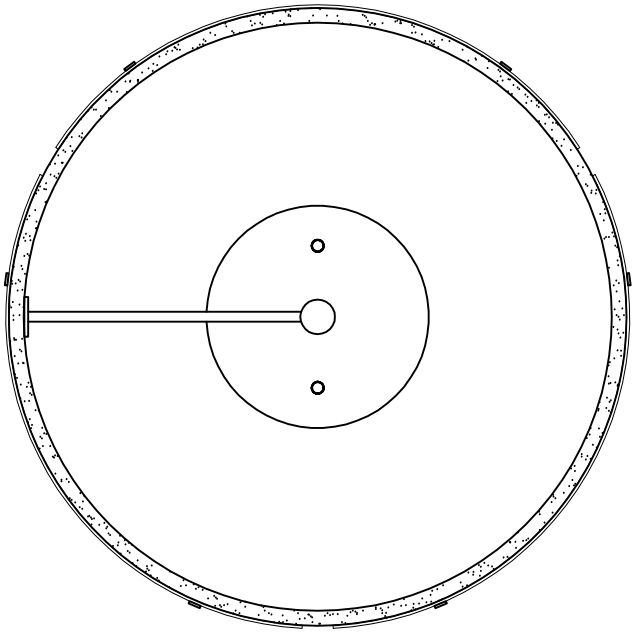

MR644711XX