A	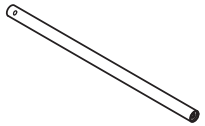	4
B	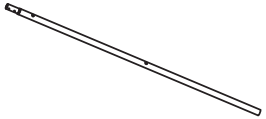	2
C	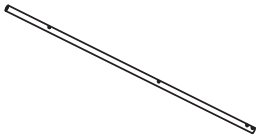	2
D		8
E		4
F	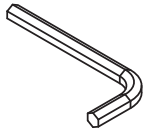	1

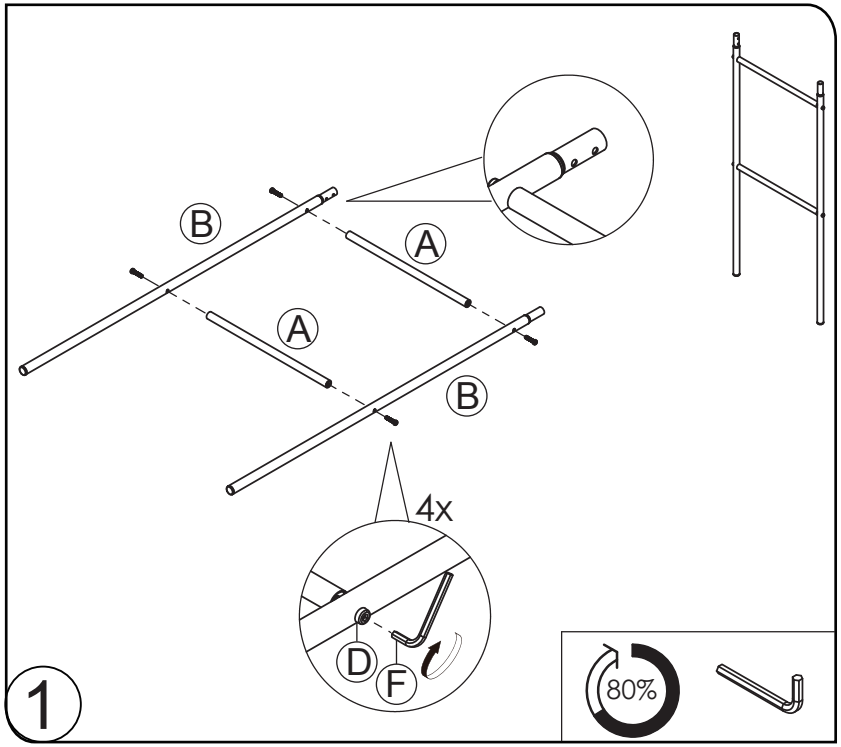

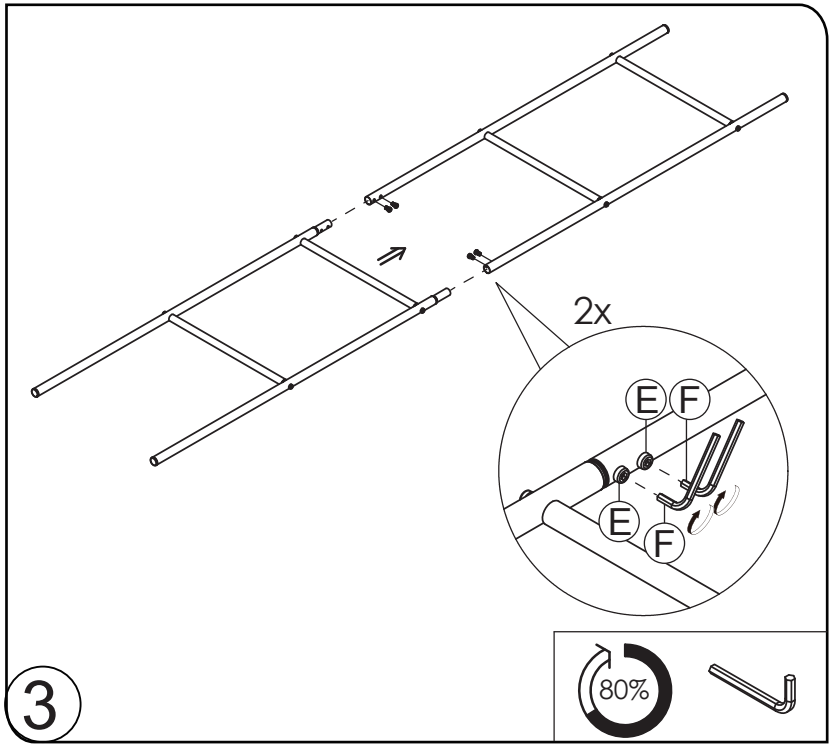

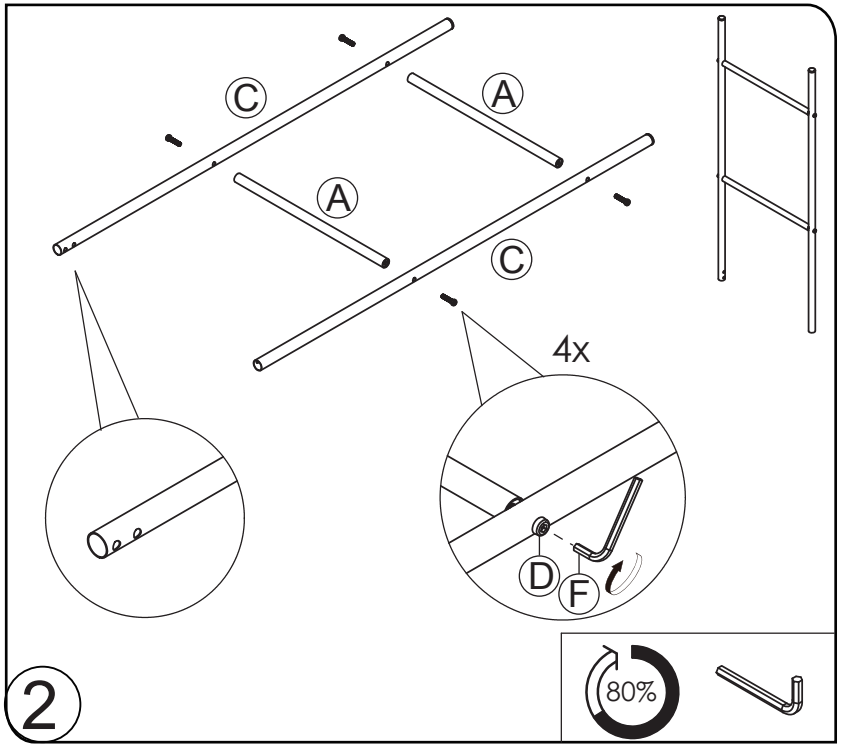

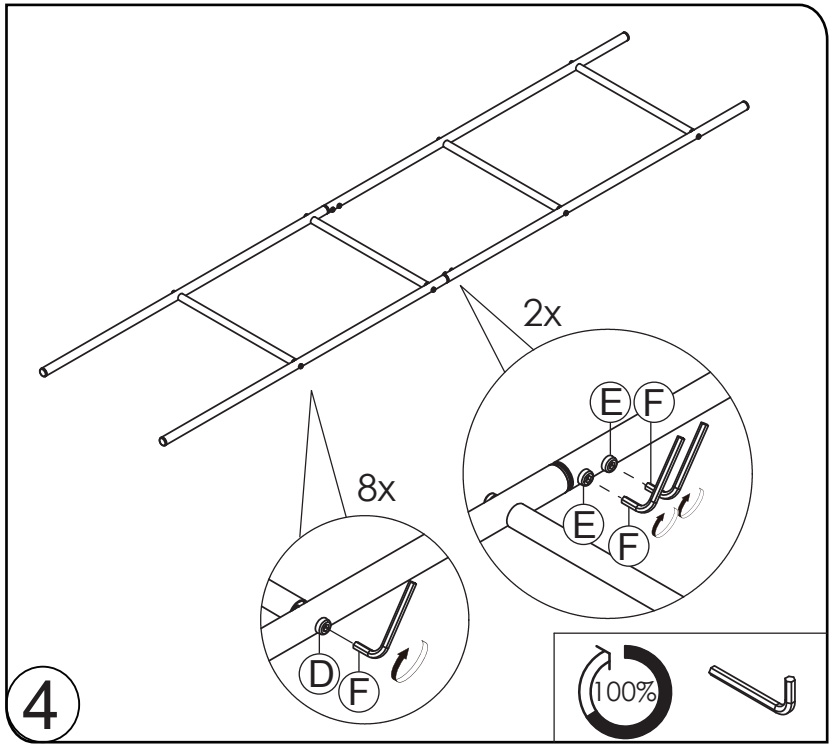

Zeller Present Handels GmbH
D-63939 Woerth
www.zeller-gmbh.com

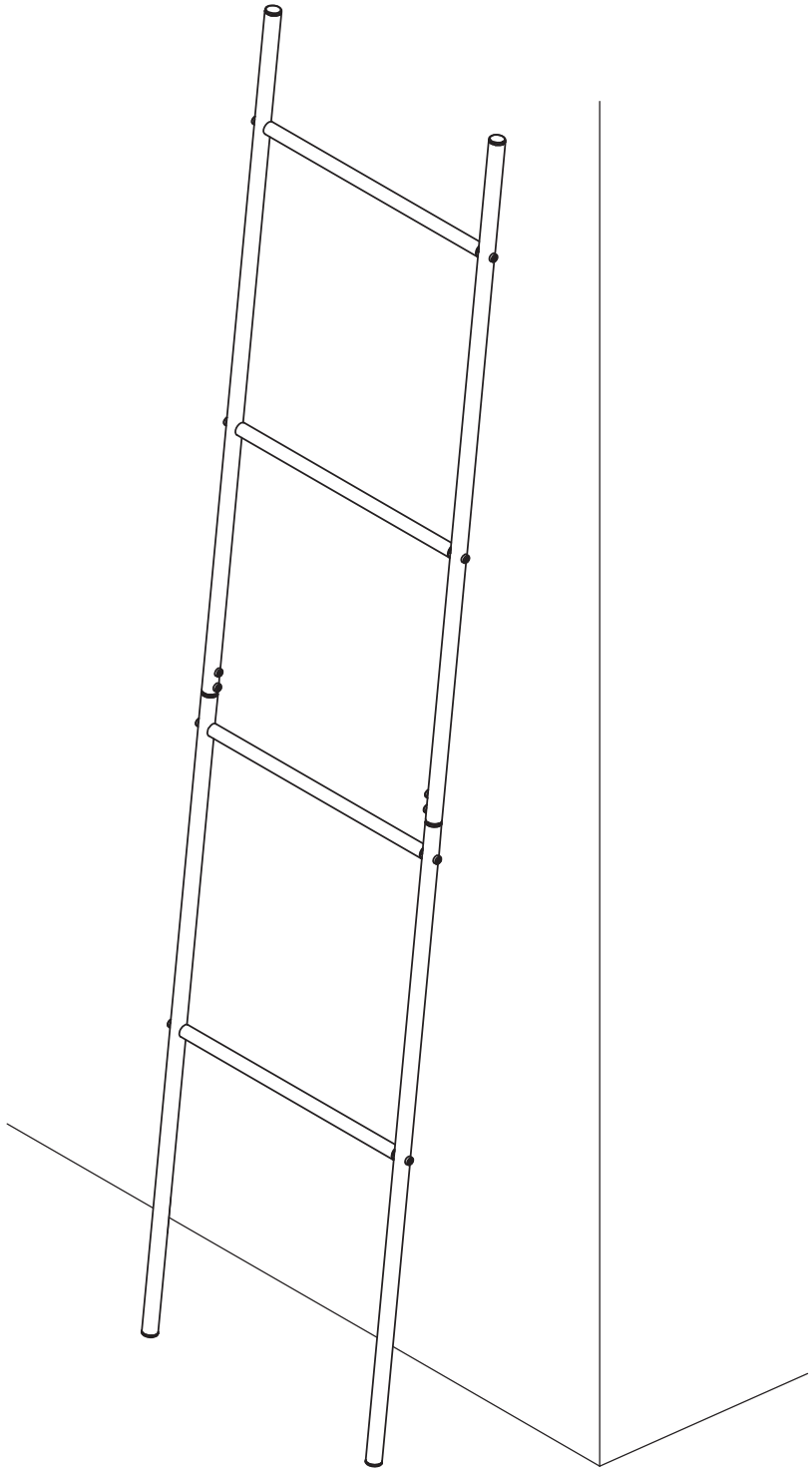

5