13520023/02
13520023/12
13520023/22

BDSK Handels GmbH & Co. KG
Mergentheimer Straße 59
DE-97084 Würzburg
Germany

22
PAP

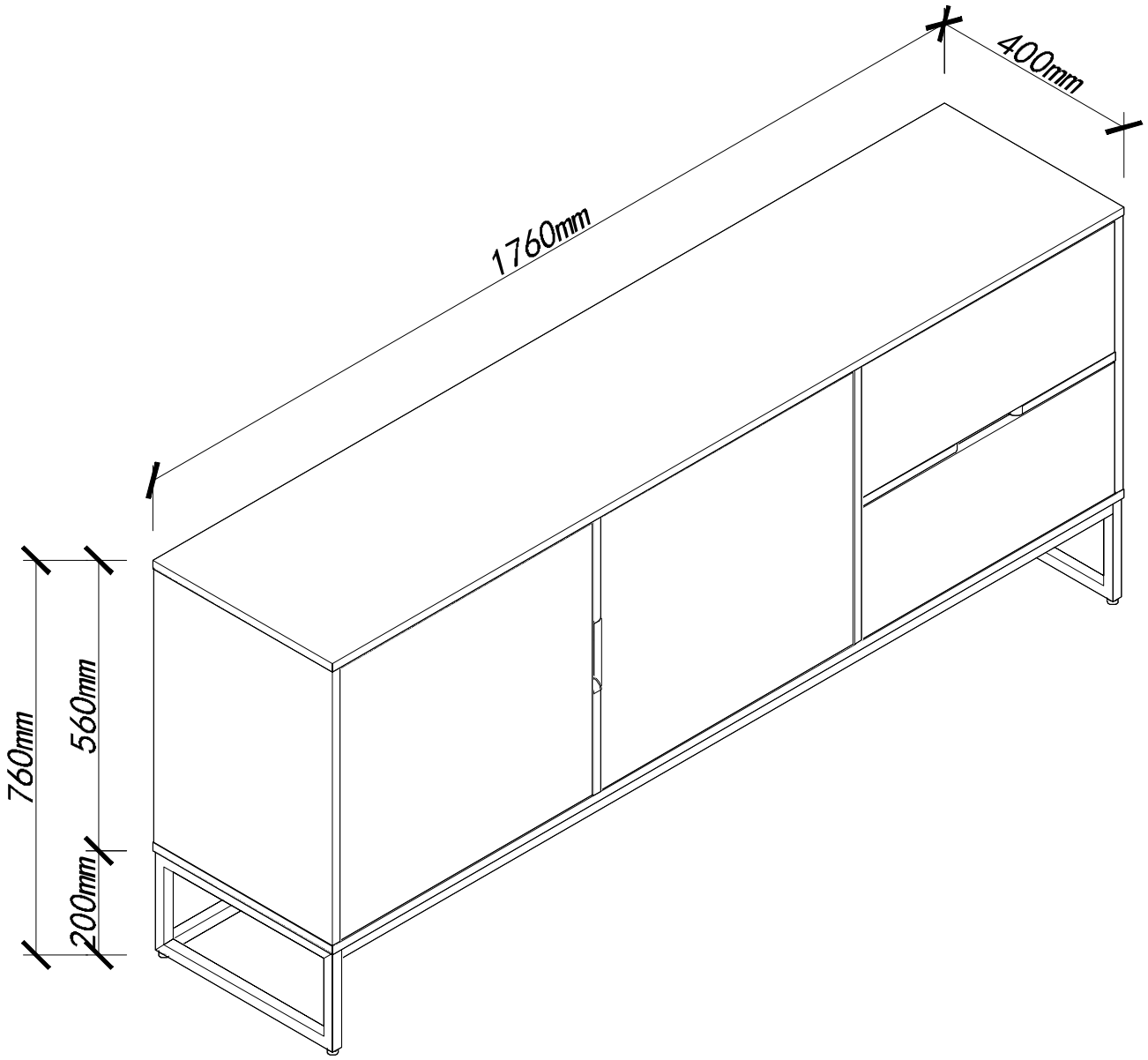

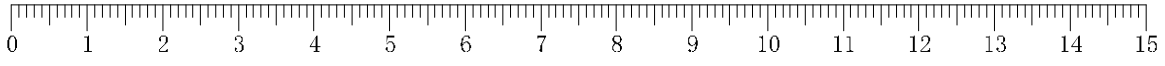

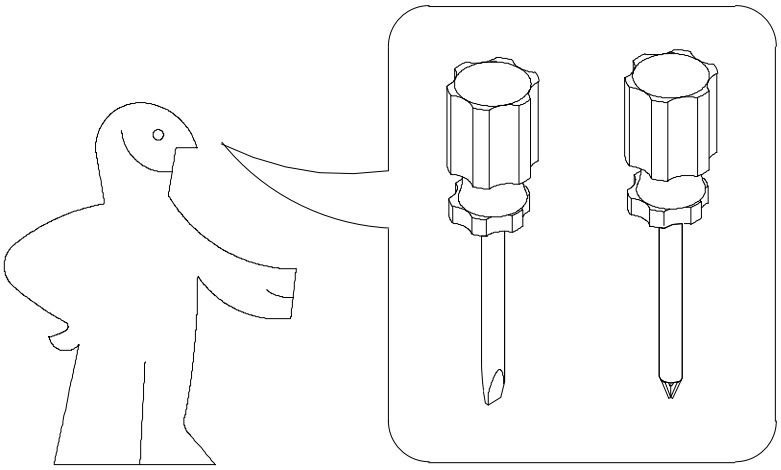

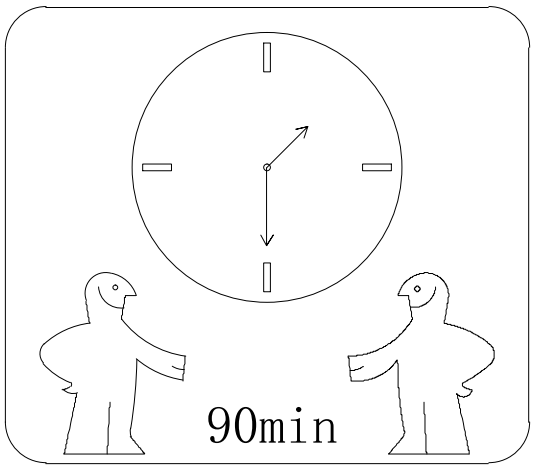
90min

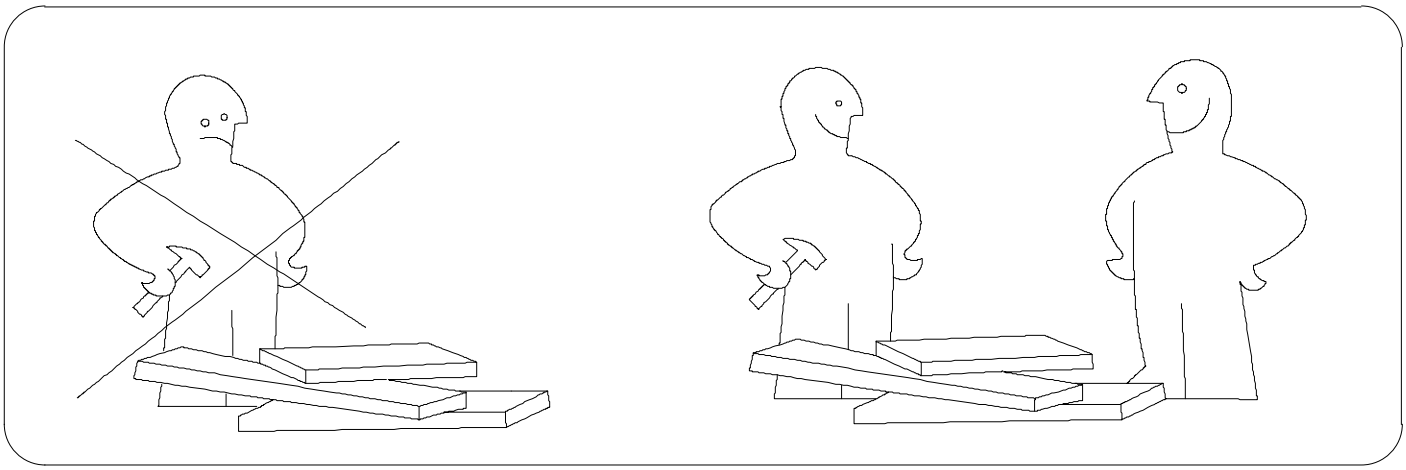

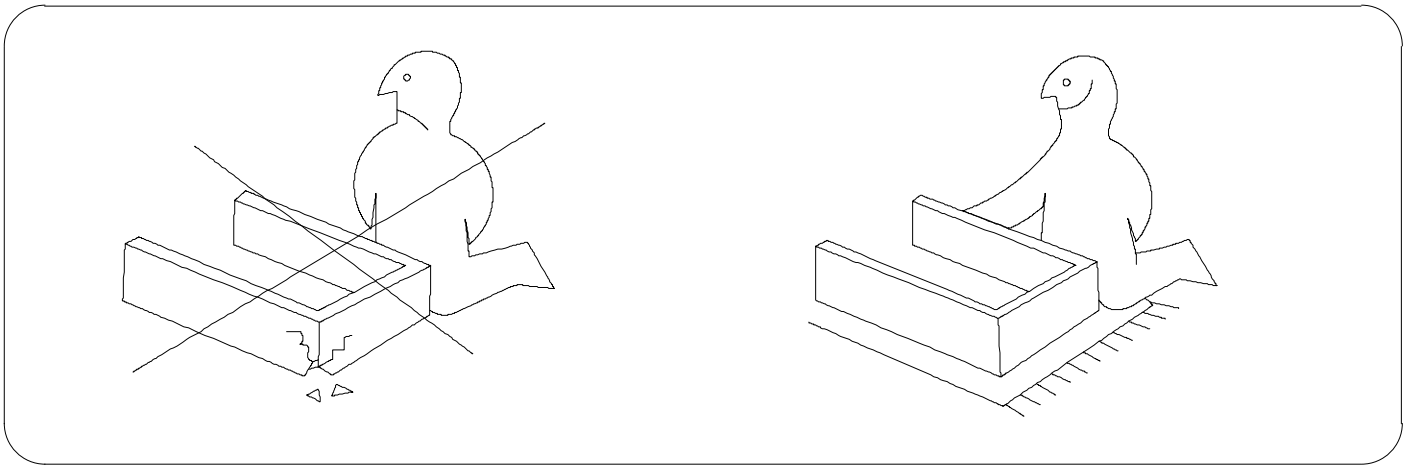

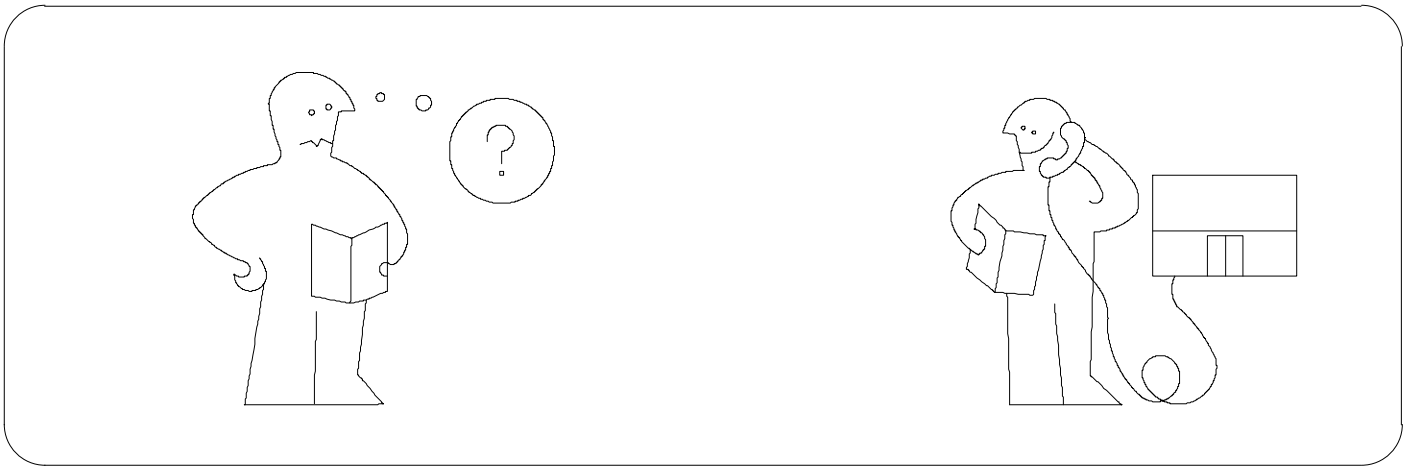

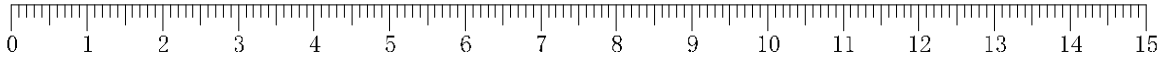
0
1
2
3
4
5
6
7
8
9
10
11
12
13
14
15

1	1760*400*16	1x
2	1760*400*16	1x
3	528*399*16	1x
4	528*399*16	1x
5	528*399*16	1x
6	528*399*16	1x
7	564*378*16	1x
8	561*345*16	2x
9	560*524*16	1x

10	560*524*16	1x
11	574*538*5	2x
12	574*538*5	1x
13	560*252*16	2x
14	514*200*12	2x
15	350*200*12	2x
16	350*200*12	2x
17	524*348*5	2x

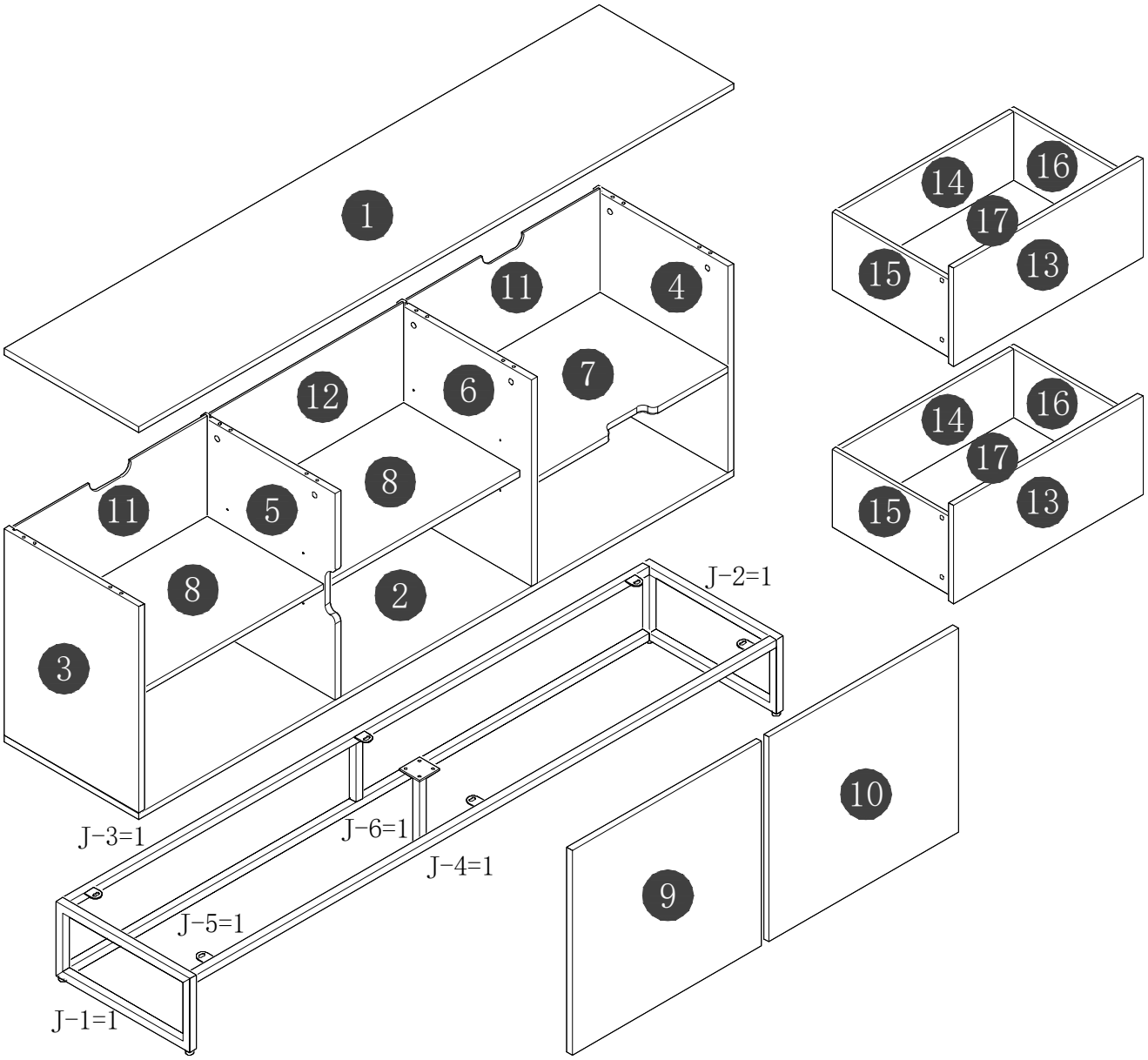

1/3	1 x1	2 x1	8 x2			J-3x1	J-4x1	J-5x1
2/3	3 x1	4 x1	5 x1	6 x1	14 x2	15 x2	16 x2	17 x2
	J-1x1	J-2x1	J-6x1					
3/3	7 x1	9 x1	10 x1	11 x2	12 x1	13 x2		

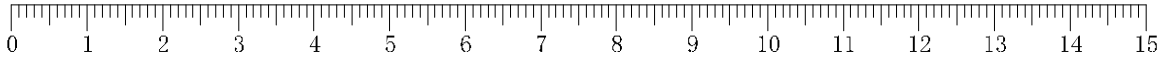

1/3

J-3=1	J-4=1	J-5=1
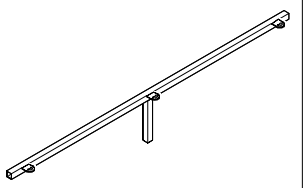	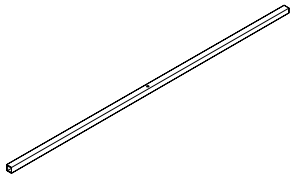	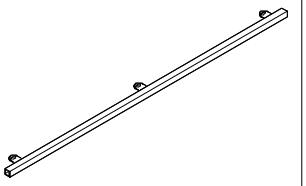

2/3

A=12	B=20	C=12	D=28	E=16	F2=2
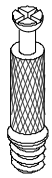	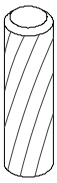	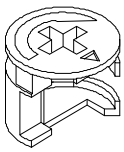		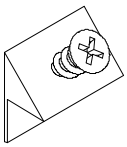	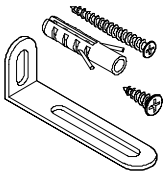
M6*40mm	Φ8*30mm	Φ15*12mm	Φ21mm		

G1=16	G2=1	H=1	I3=4	J-1=1
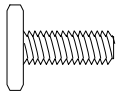	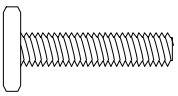		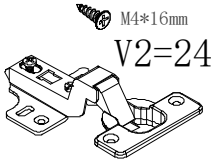	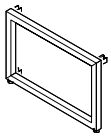
M6*16	M6*35mm	M4		

J-2=1	J-6=1	K=2	L=8	N=4	O=16
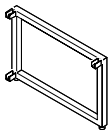	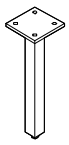	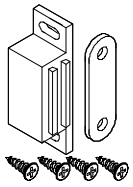	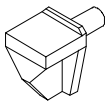	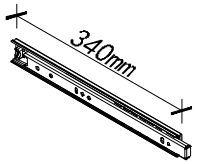	
					M6*34mm

P=16	Q=8	V1=24	Z1=10	Z2=10
	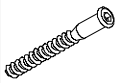			
Φ12*10.5mm	Φ7*48mm	M3.5*12mm	Φ10*2.5mm	Φ13*1mm

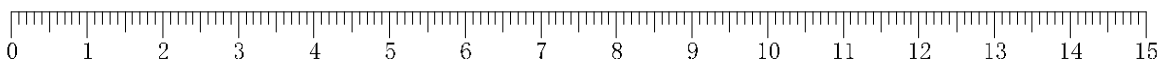

1

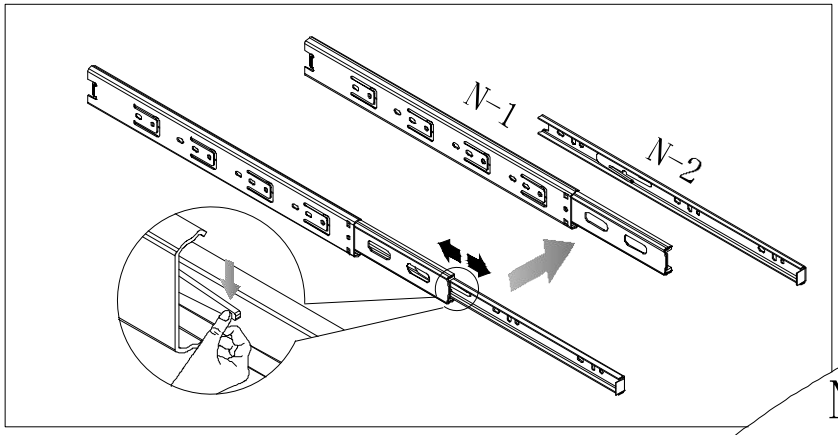

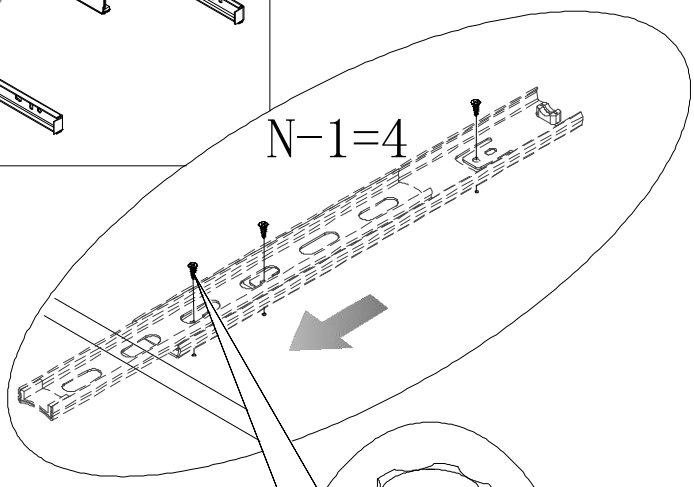

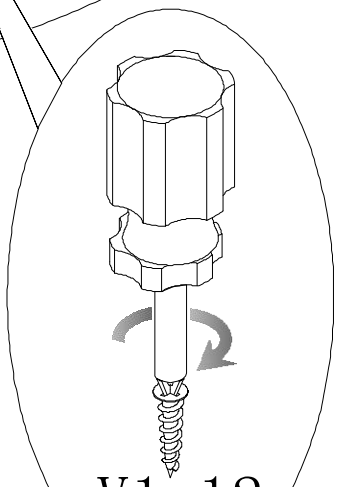

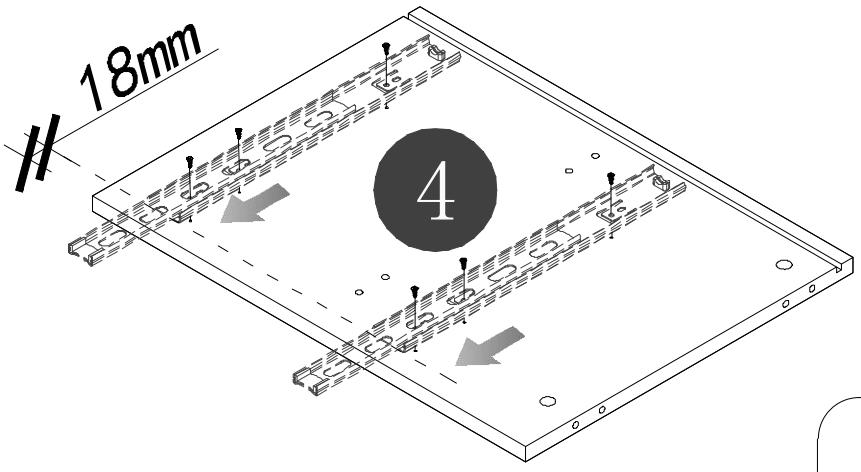

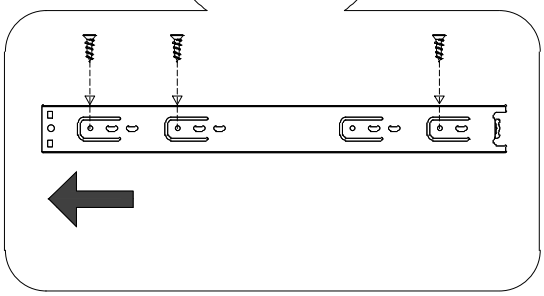

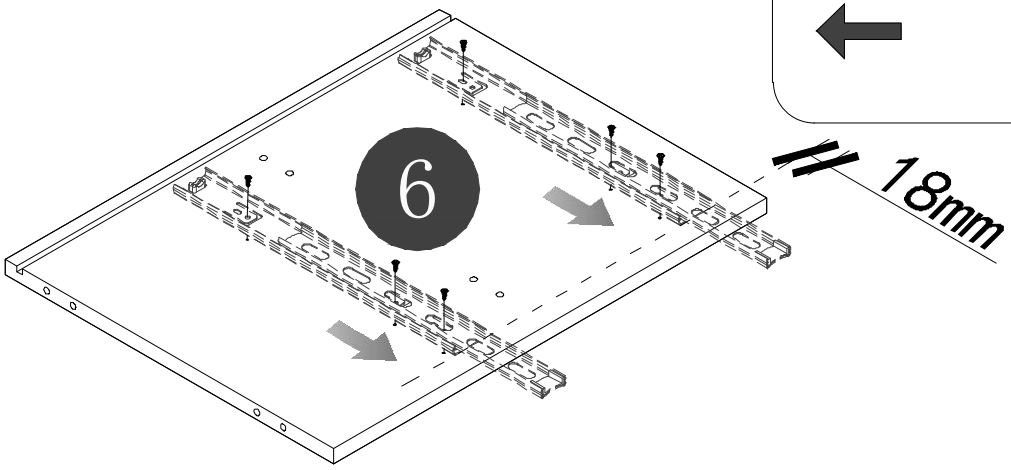

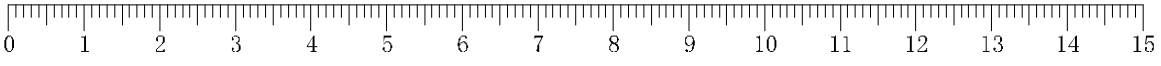

2

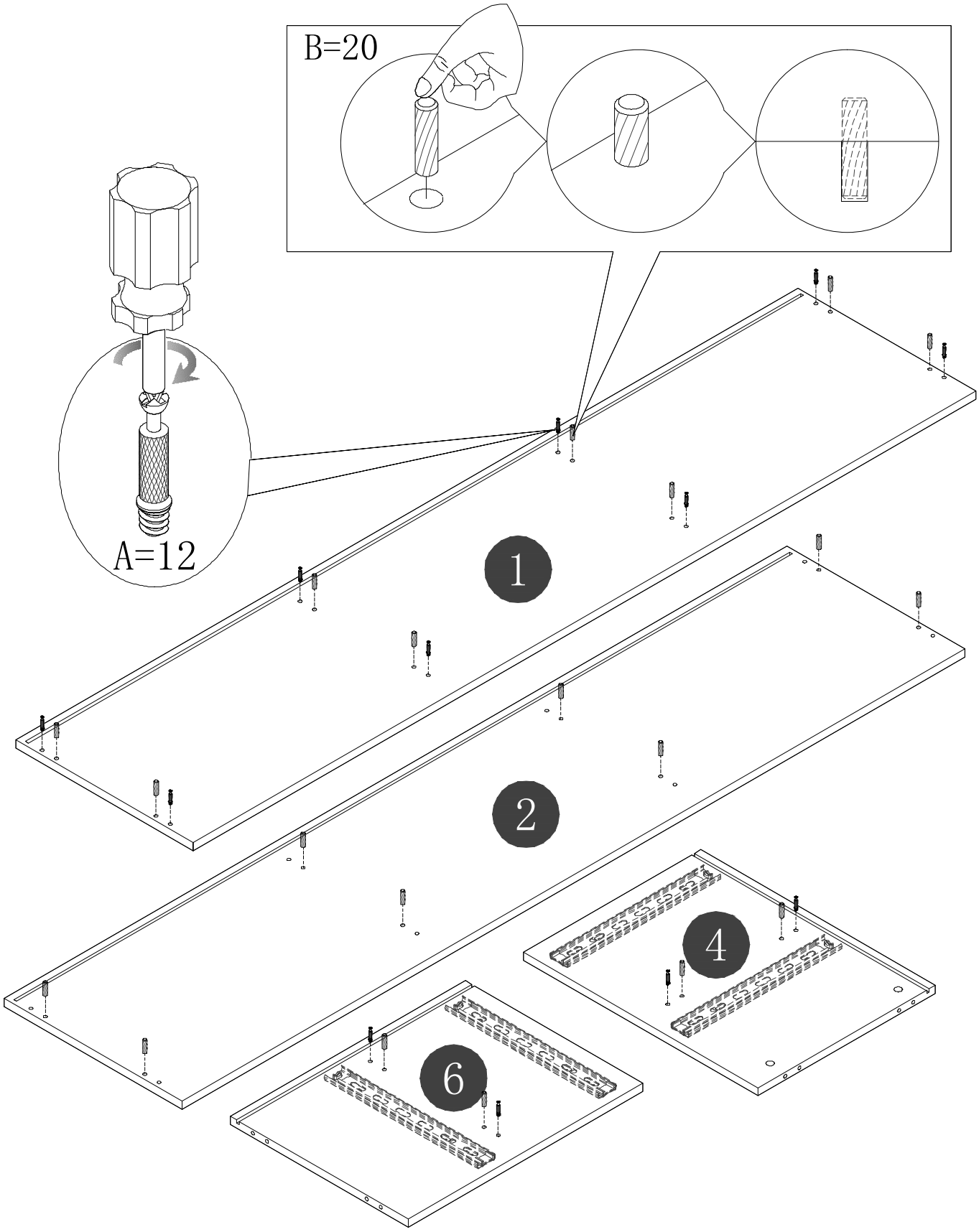

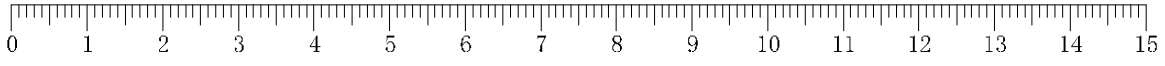

3

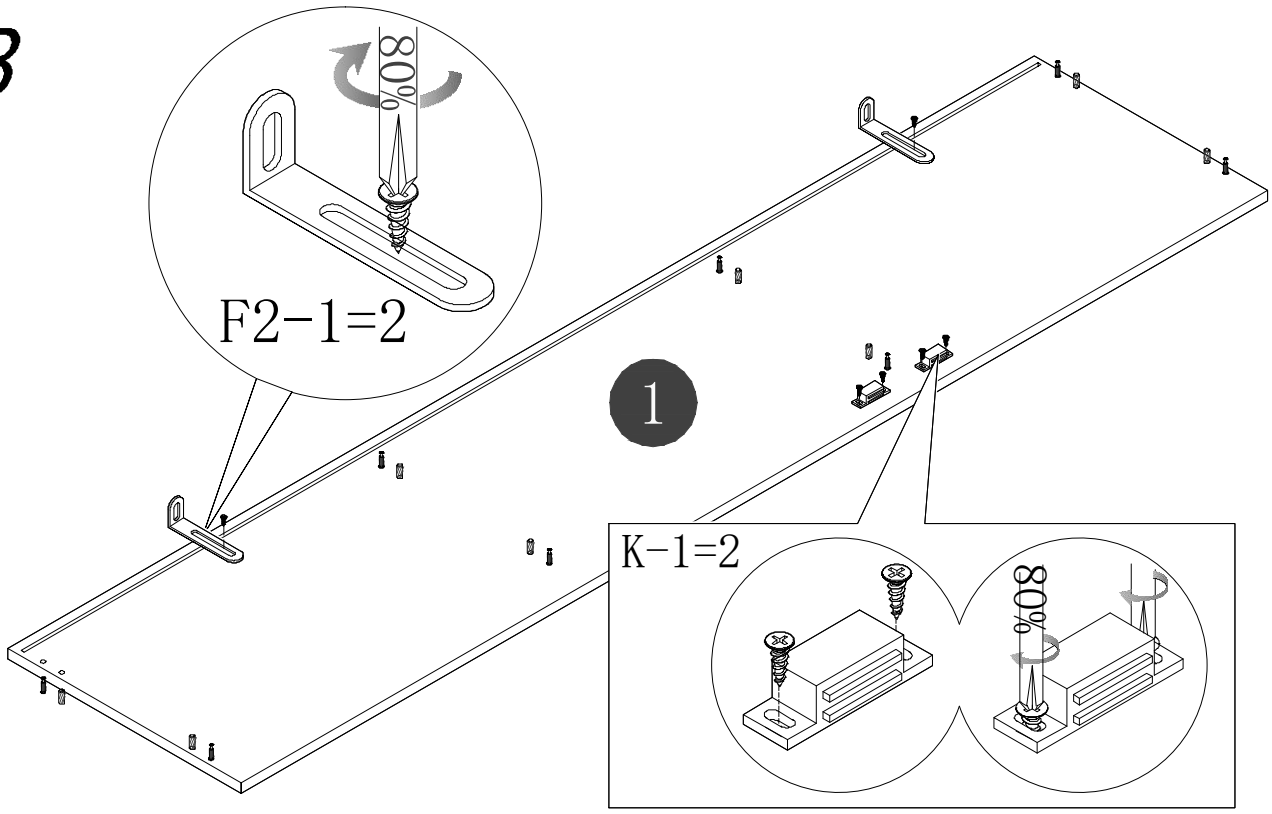

4

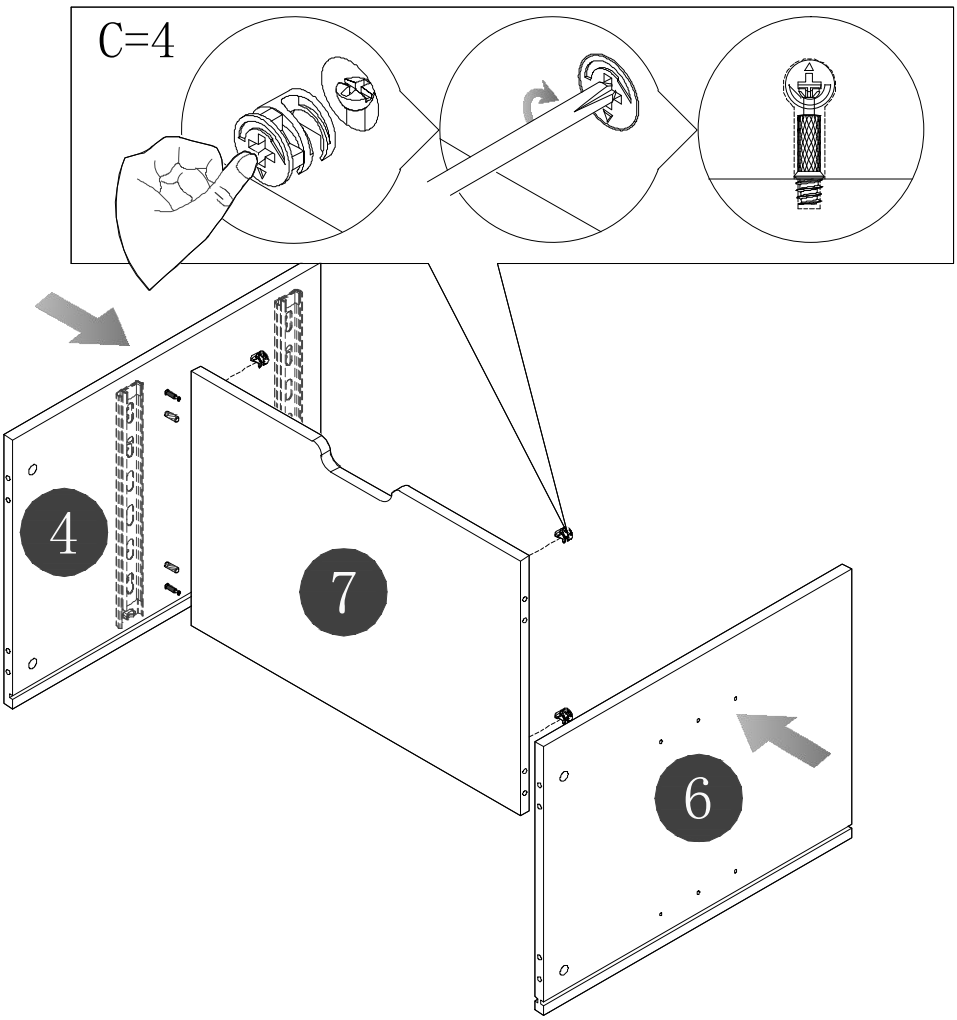

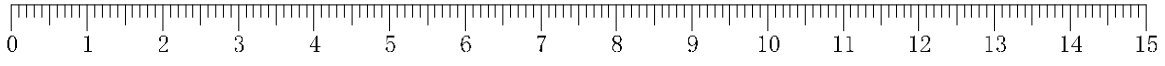

5

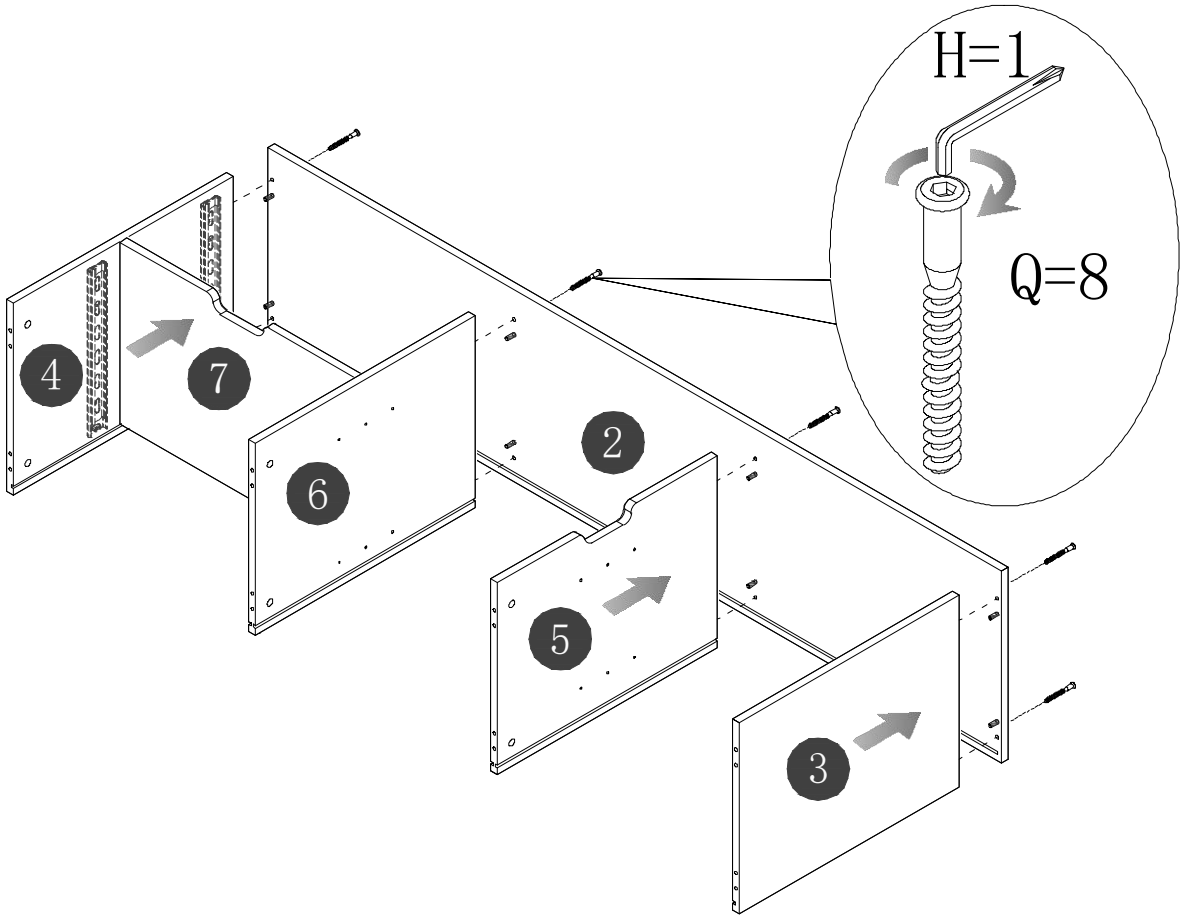

6

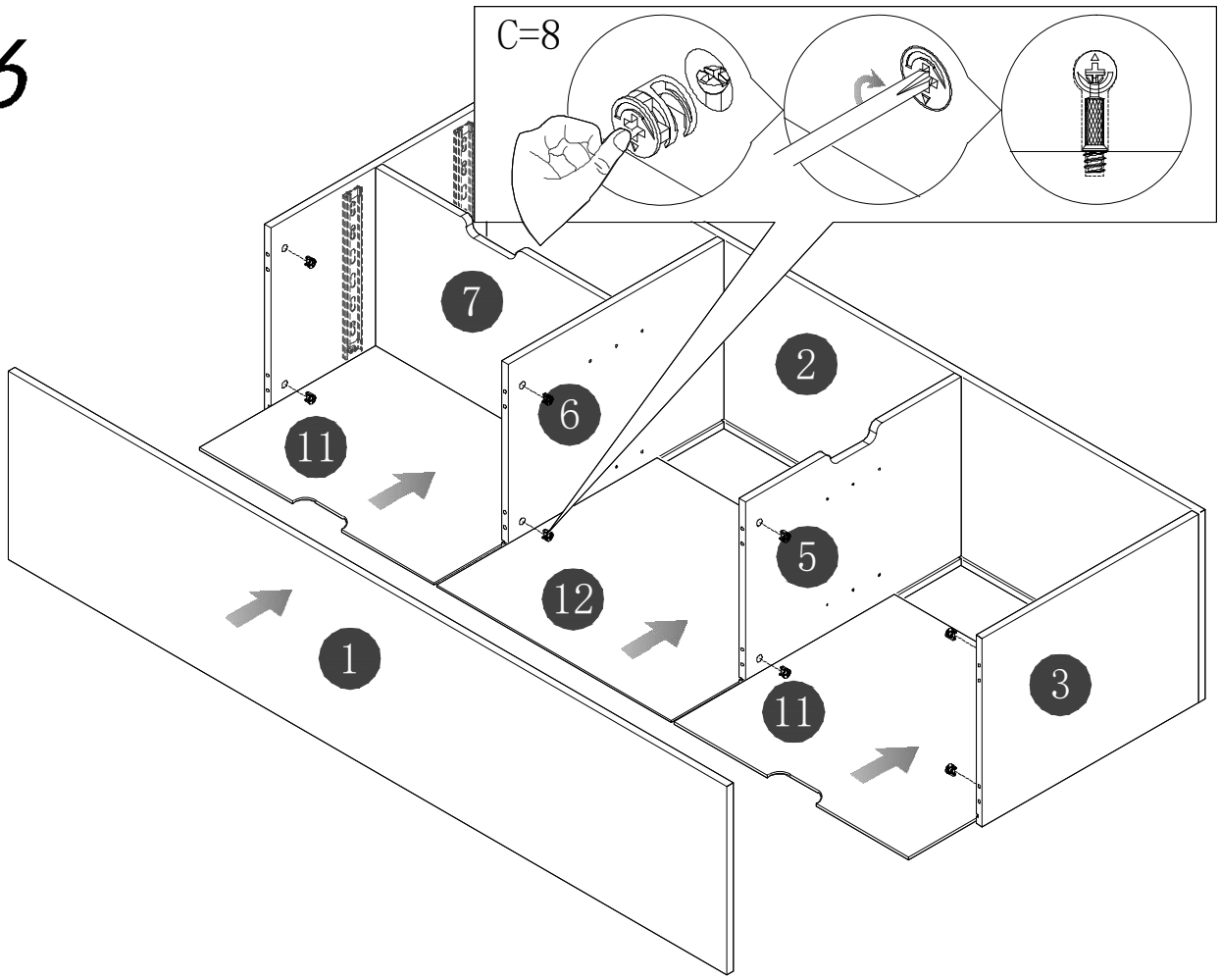

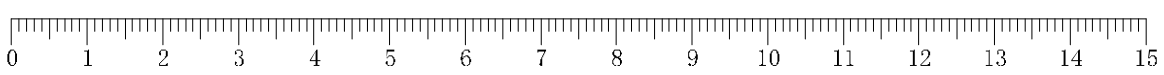

7

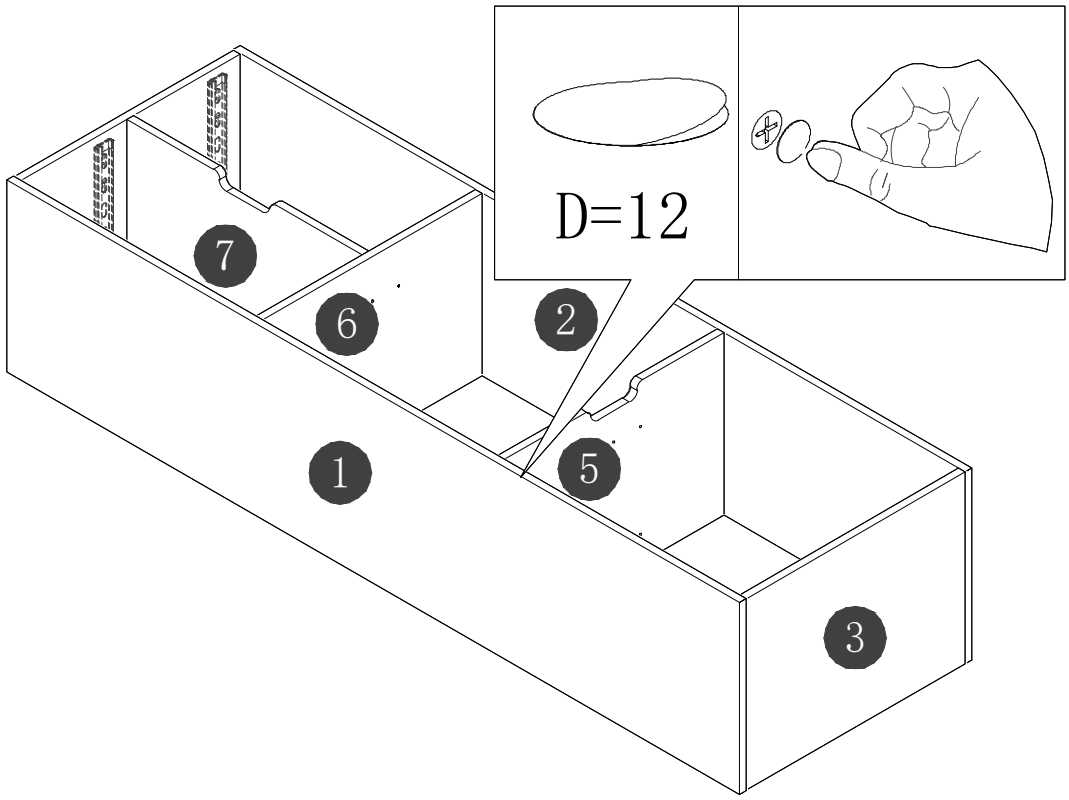
D=12
7
6
2
1
5
3

8

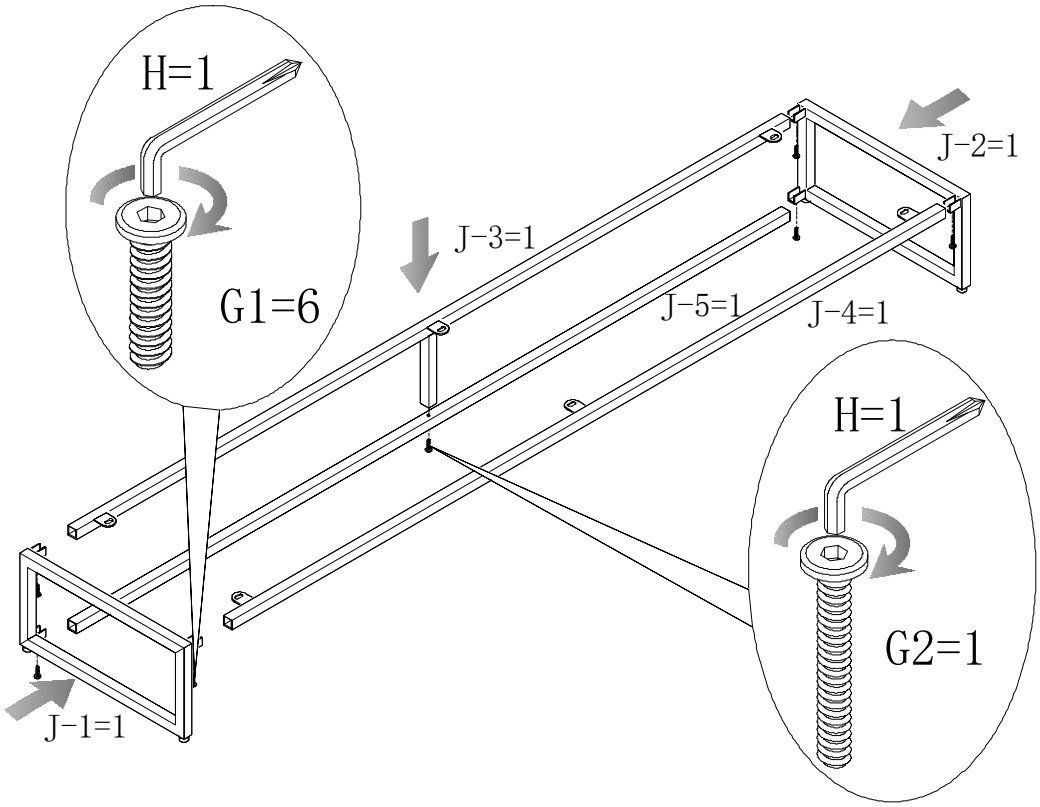
H=1
G1=6
J-2=1
J-3=1
J-5=1
J-4=1
H=1
G2=1
J-1=1

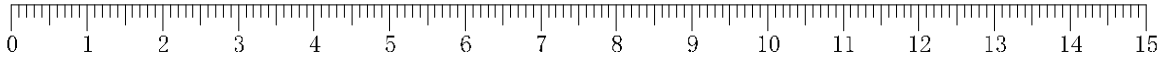
0
1
2
3
4
5
6
7
8
9
10
11
12
13
14
15

9

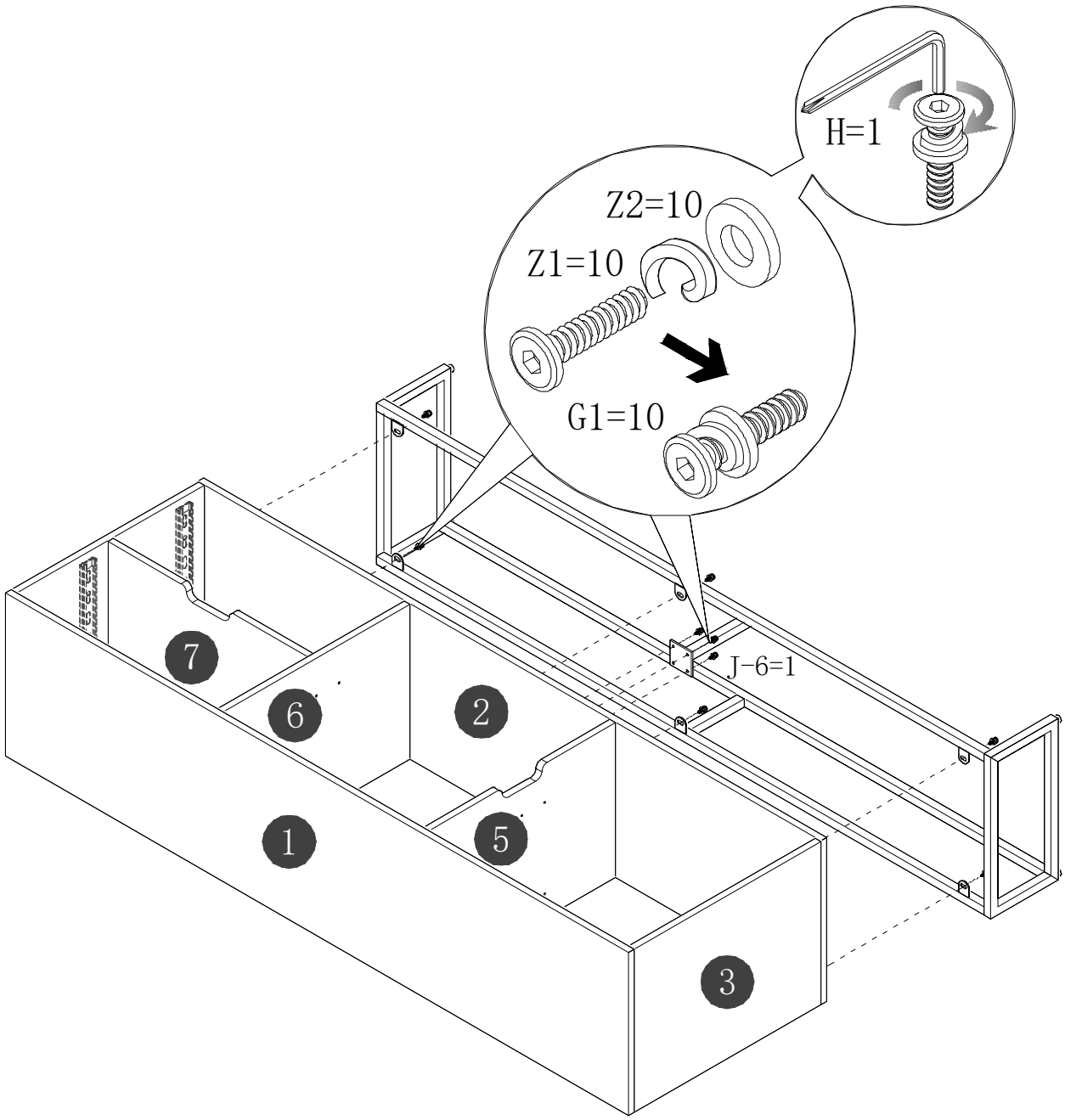

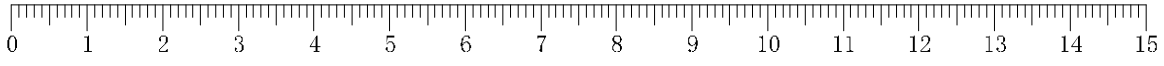

10

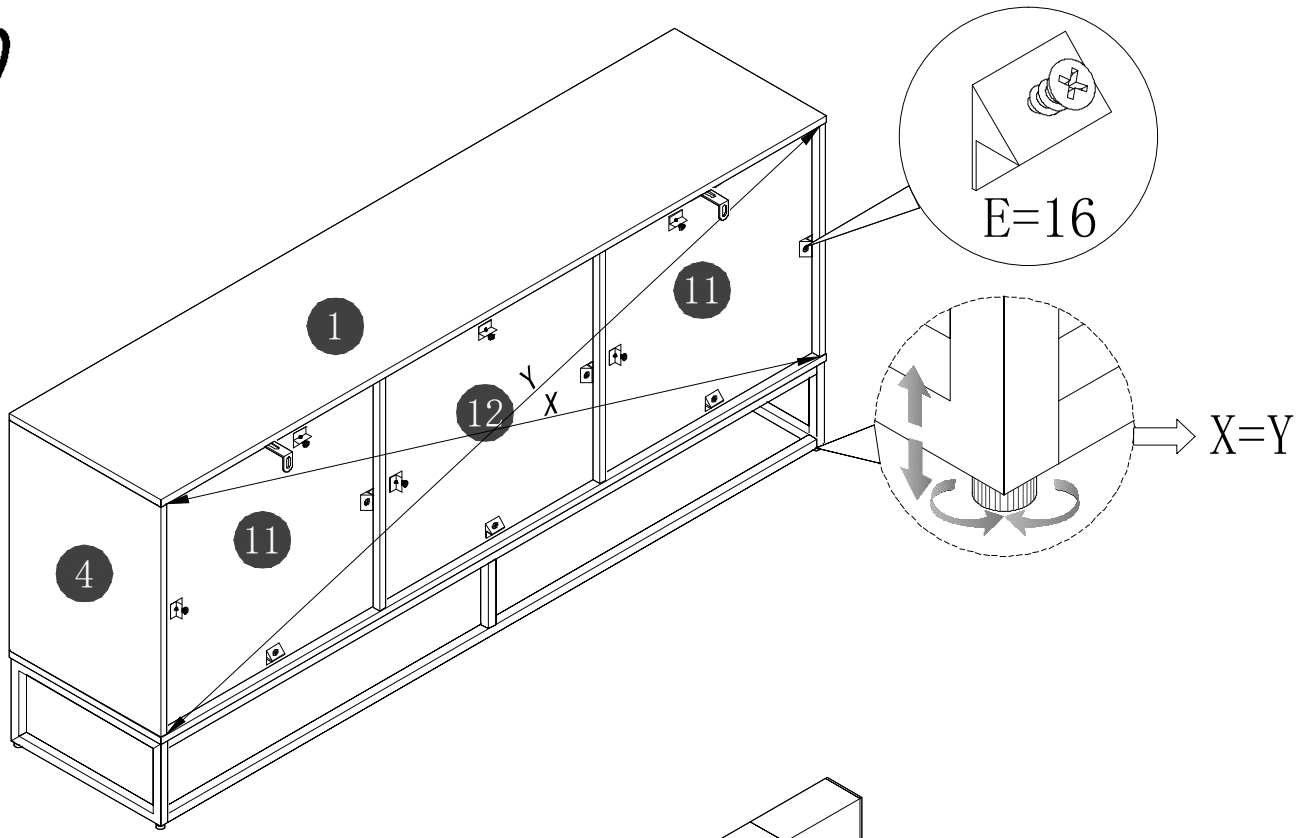
E=16
X=Y
1
11
12
Y
X
11
4

11

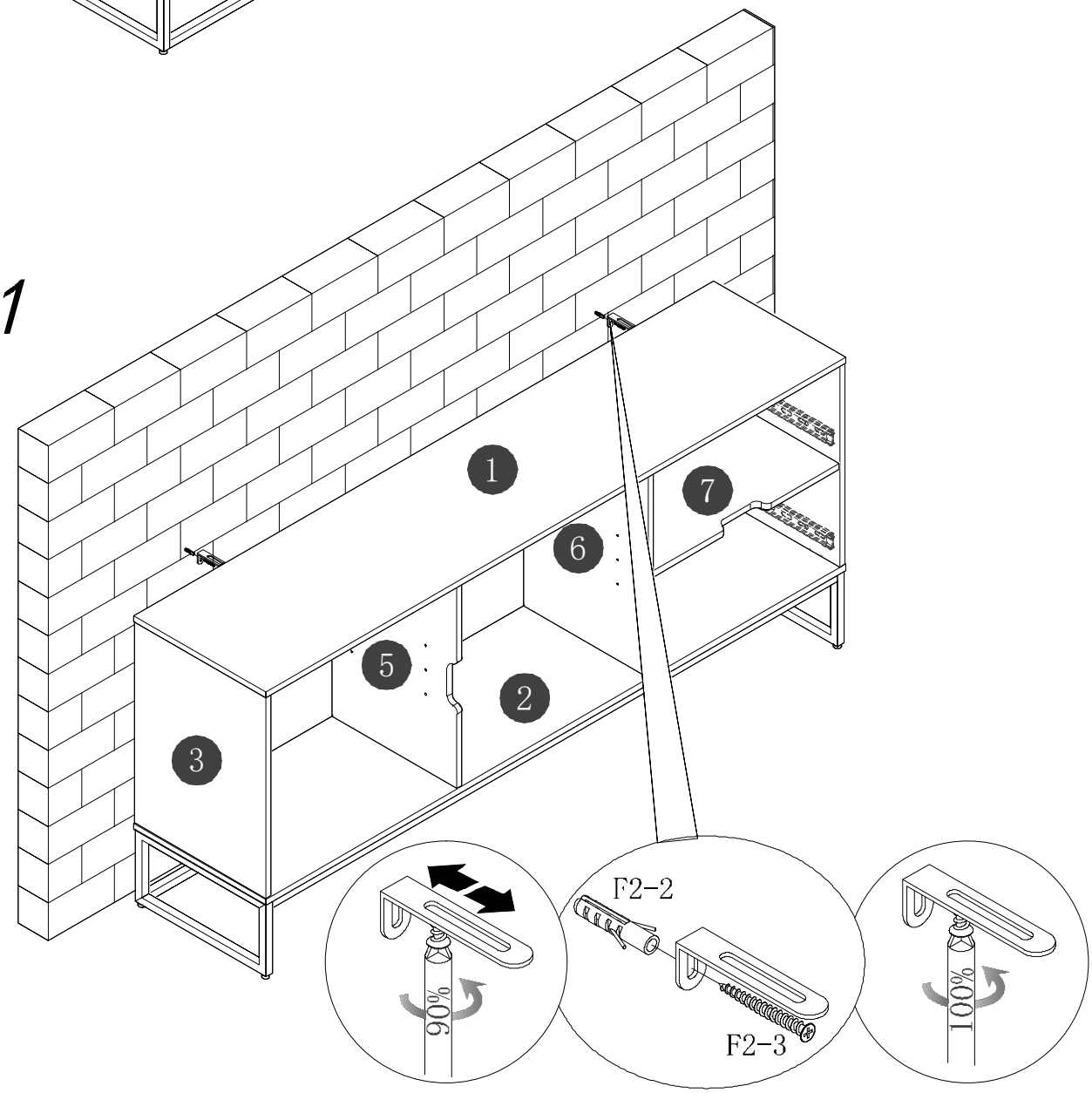
1
7
6
5
2
3
F2-2
F2-3
90°
100°

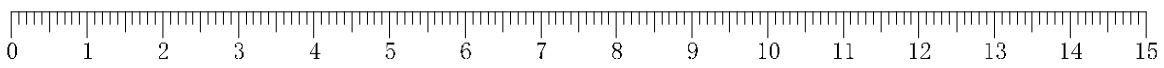
0
1
2
3
4
5
6
7
8
9
10
11
12
13
14
15

12

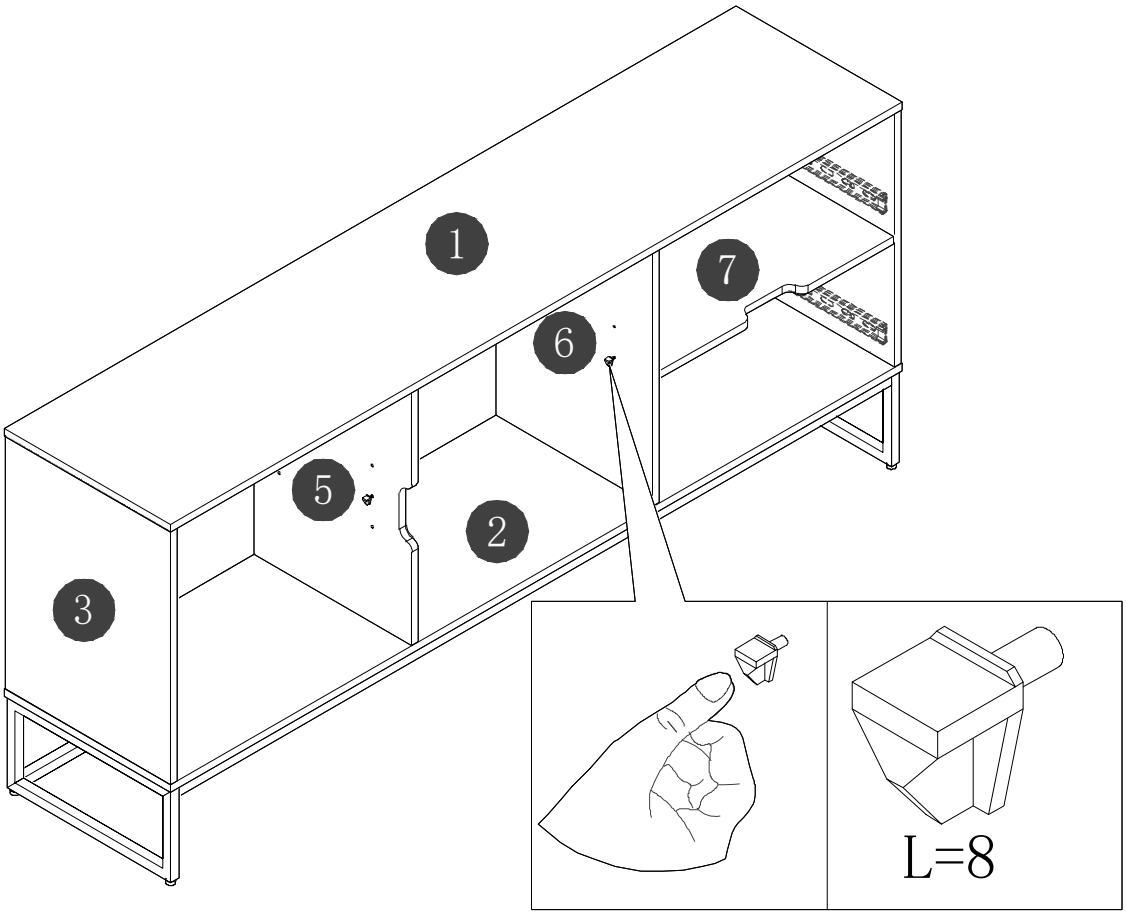

13

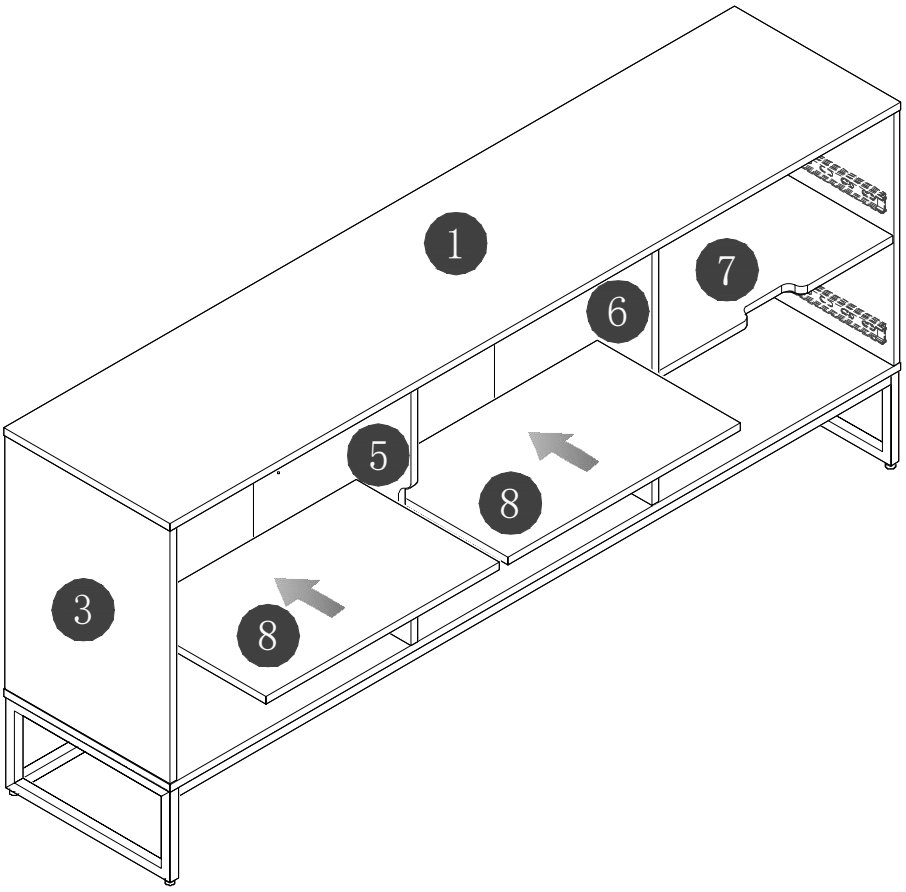

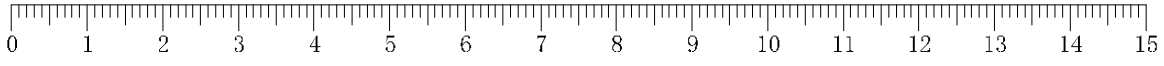

14

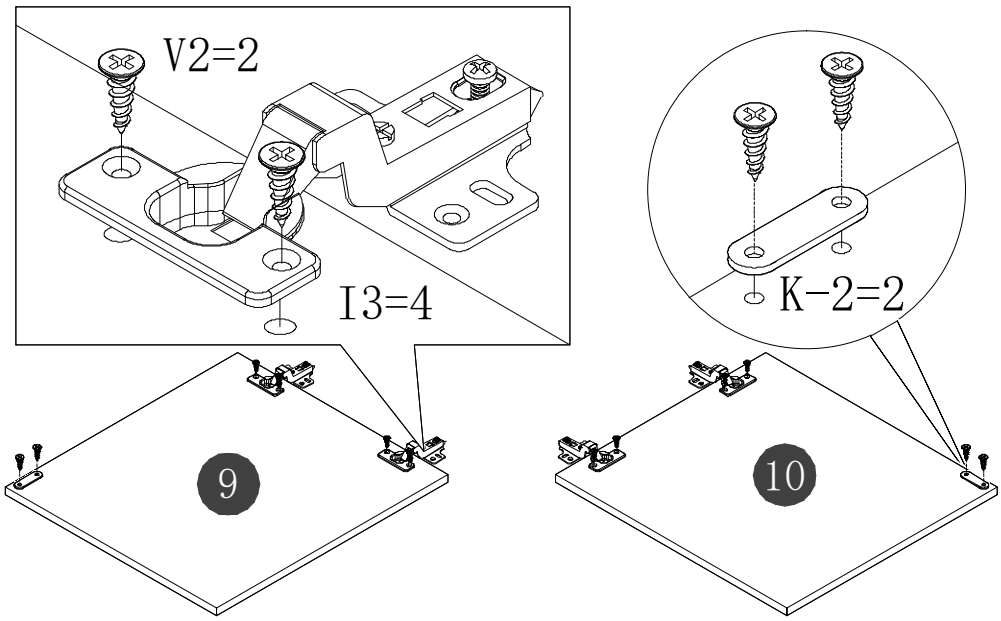

15

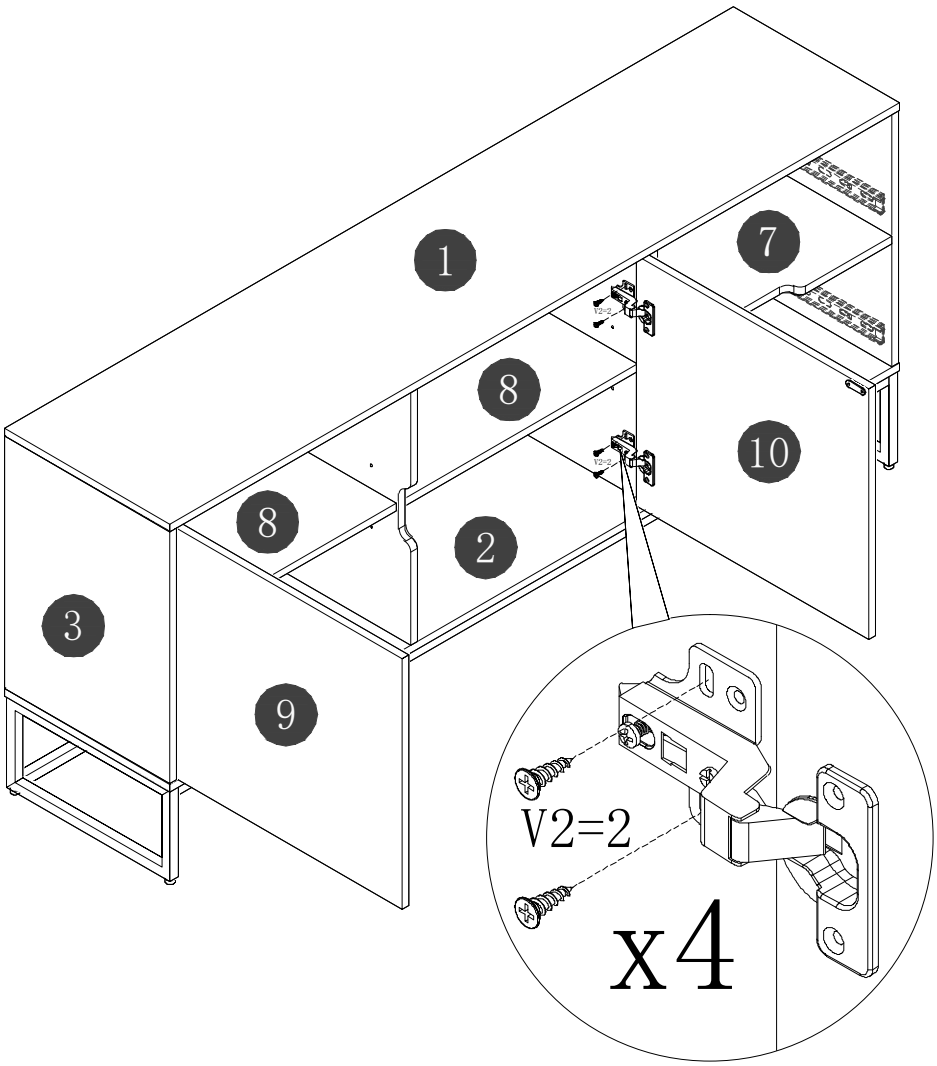

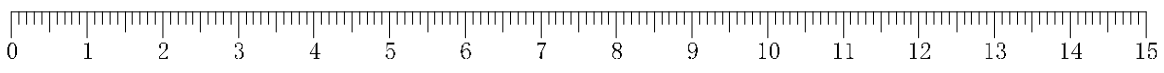

16

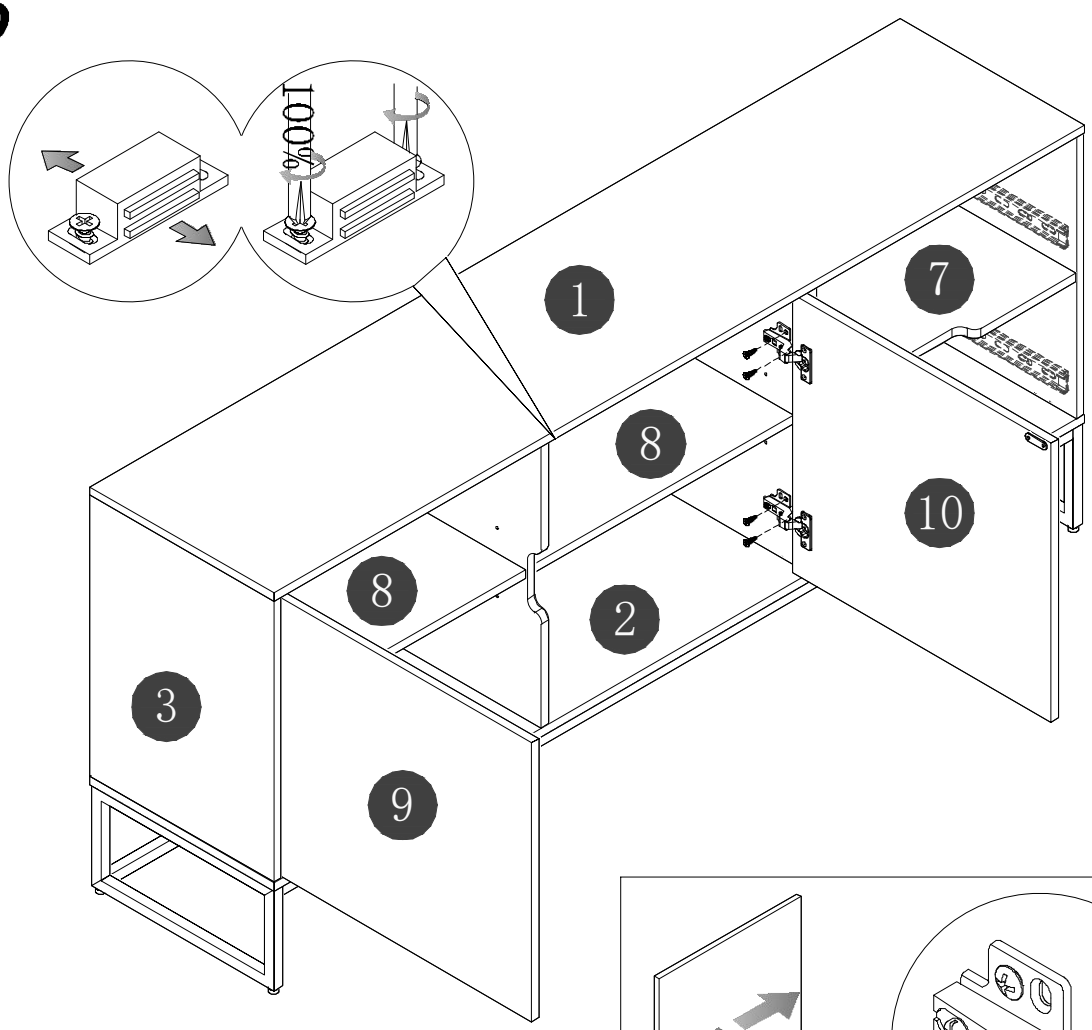
100%
1
7
8
10
8
2
3
9

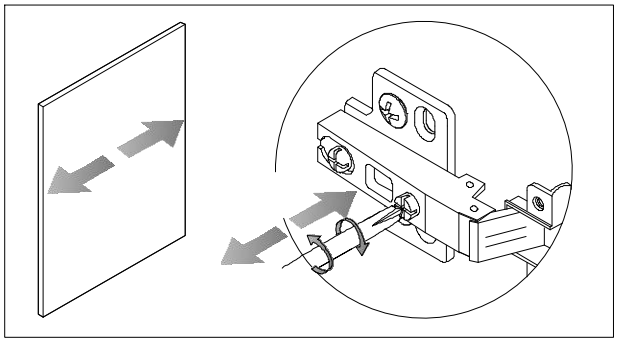

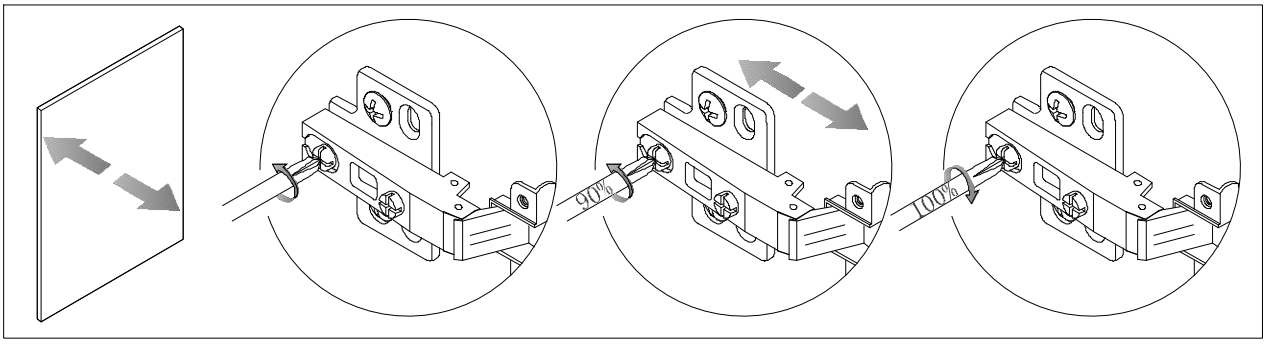
90°
100°

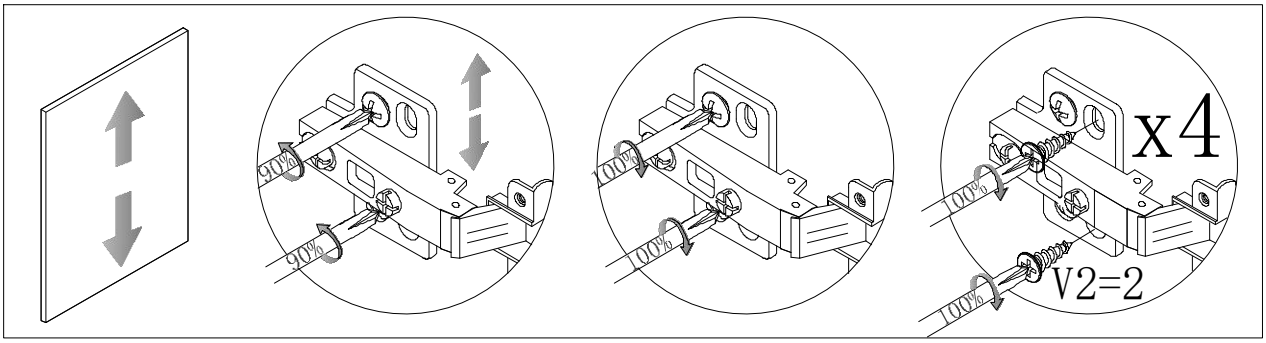
90°
90°
100°
100°
100°
100°
x4
V2=2

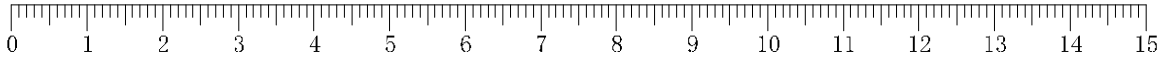
0
1
2
3
4
5
6
7
8
9
10
11
12
13
14
15

17

17-1

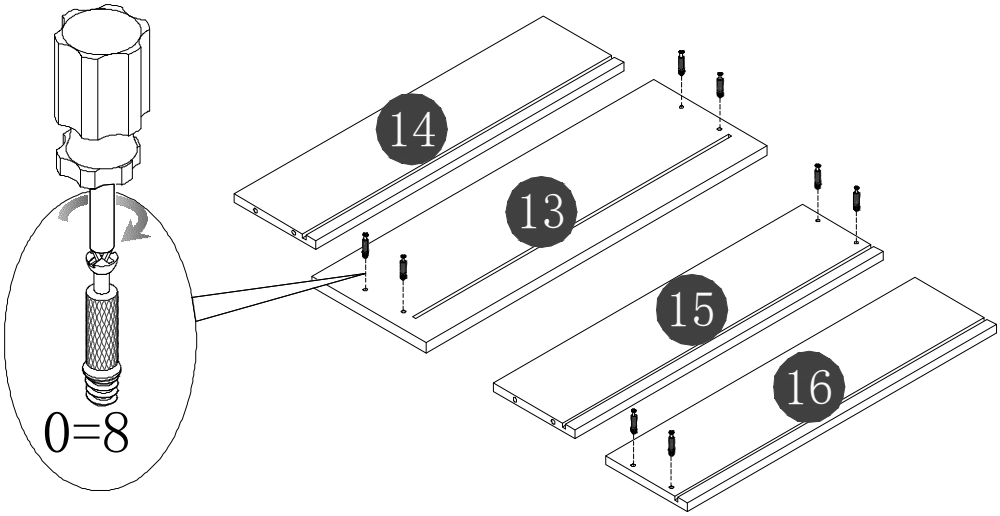

17-2

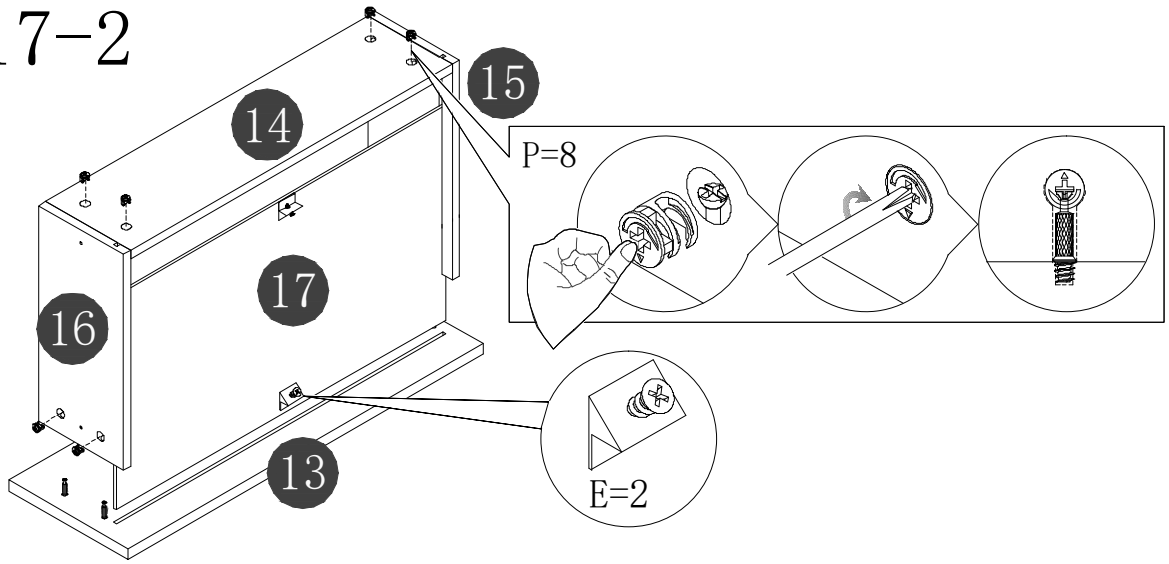

17-3

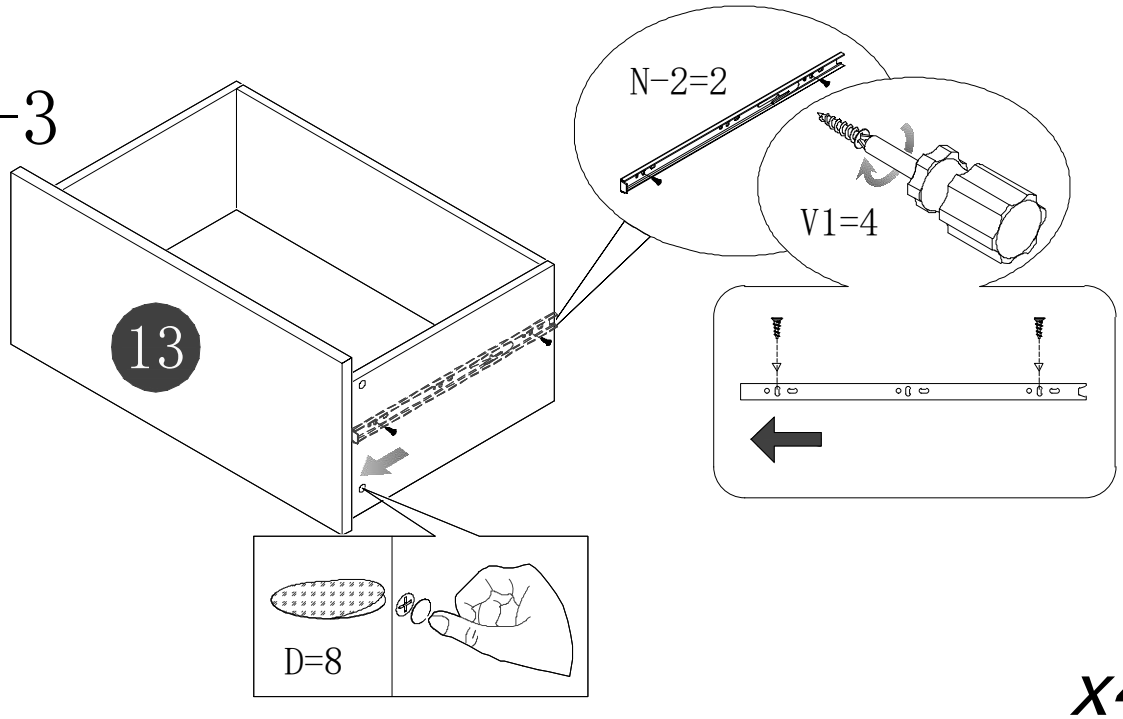

x4

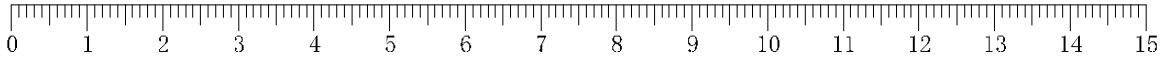

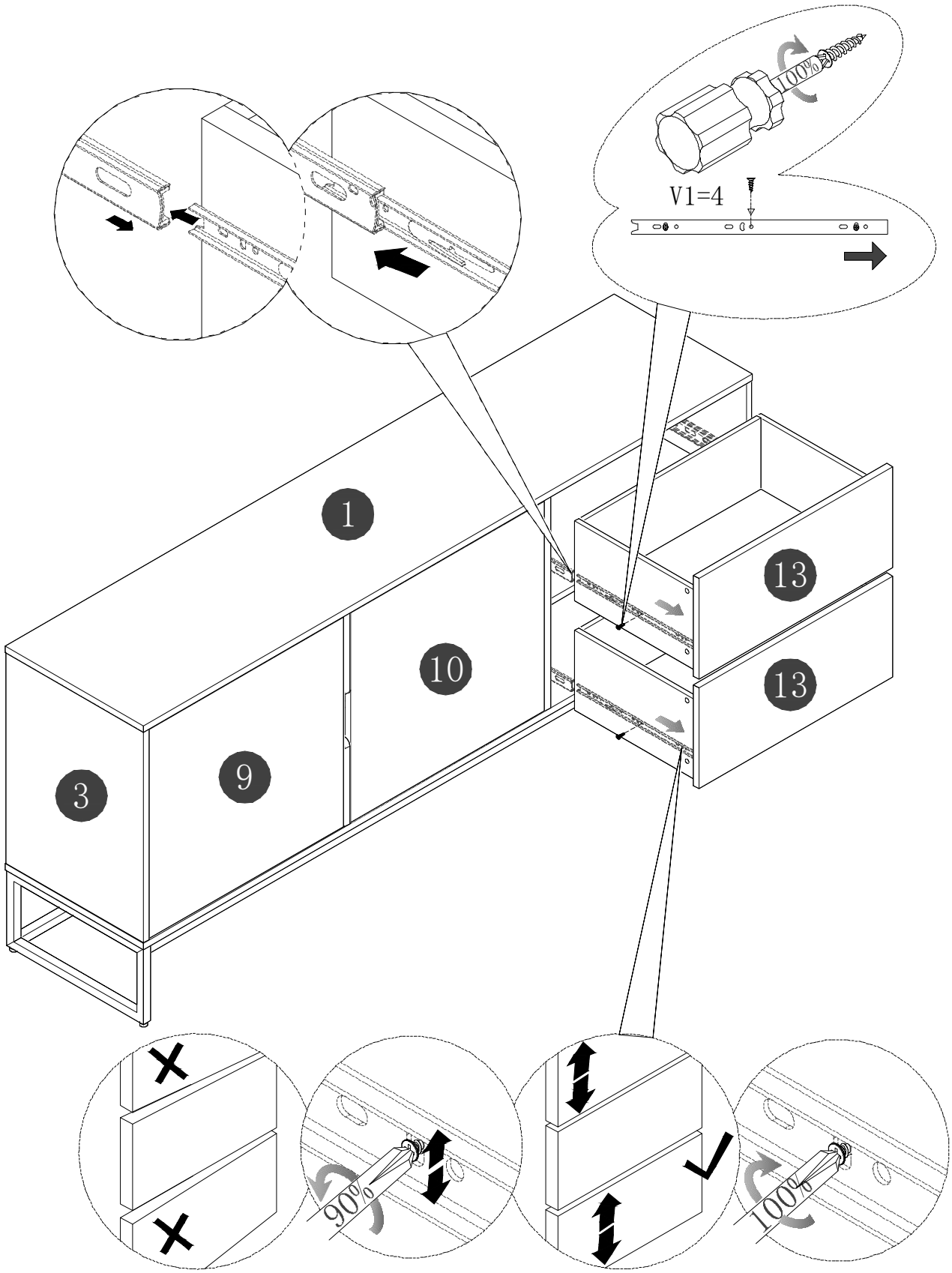
100%
V1=4
1
13
10
13
3
9
90%
100%

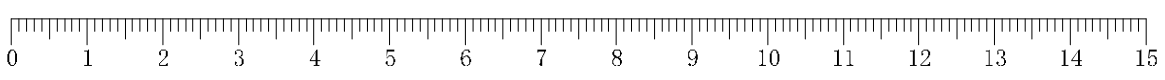
0
1
2
3
4
5
6
7
8
9
10
11
12
13
14
15

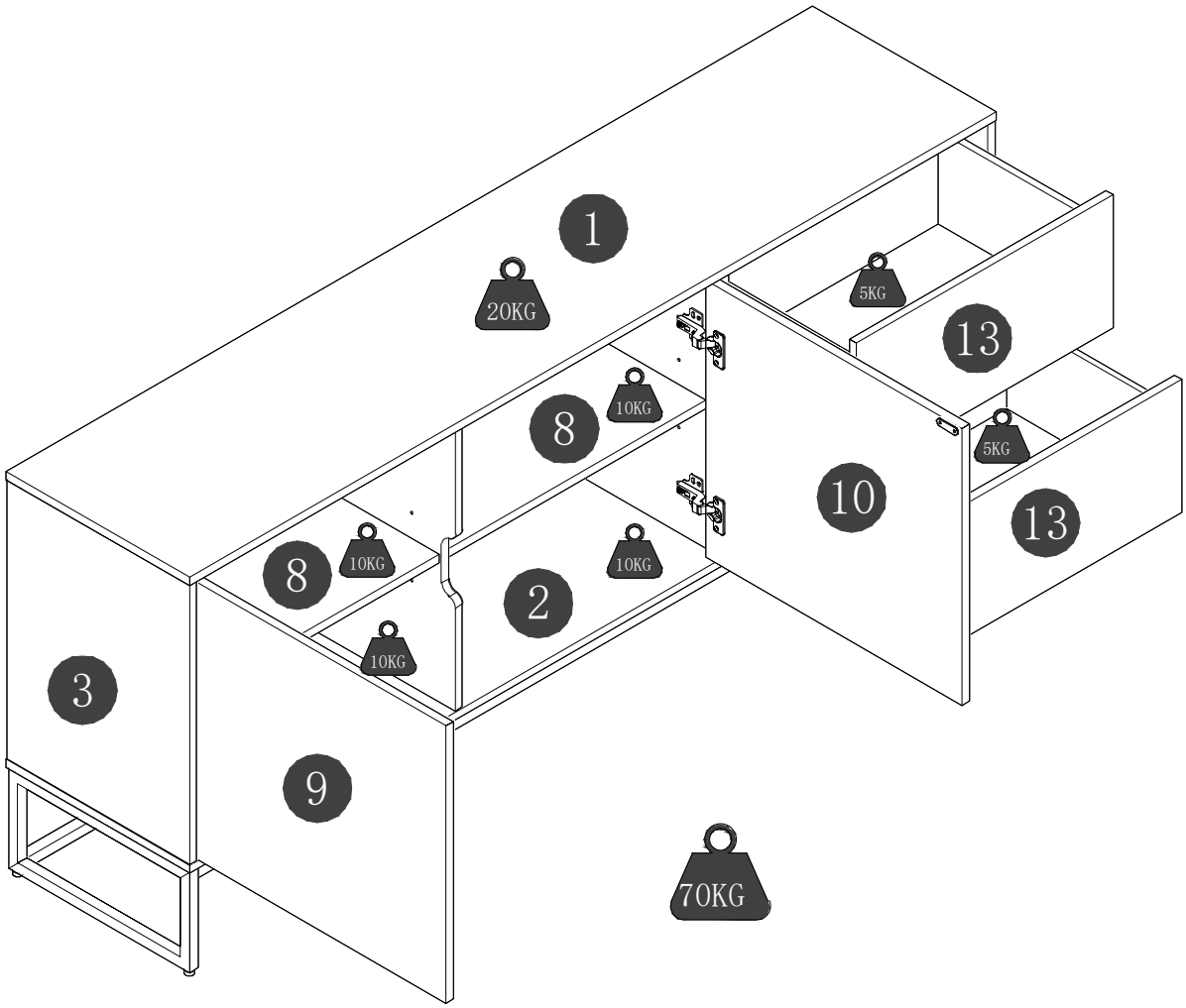
1
20KG
5KG
13
8
10KG
5KG
10
13
8
10KG
10KG
2
10KG
3
9
70KG

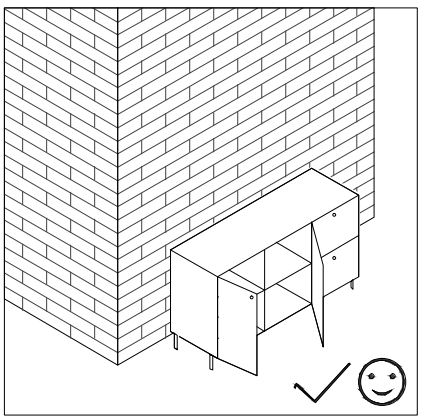

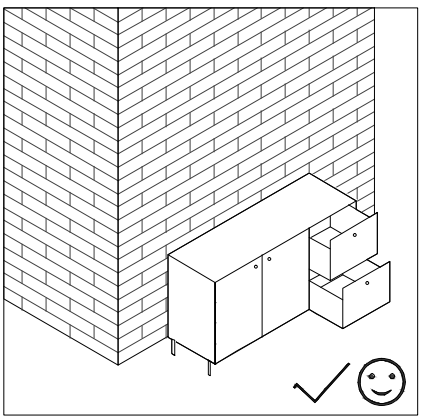

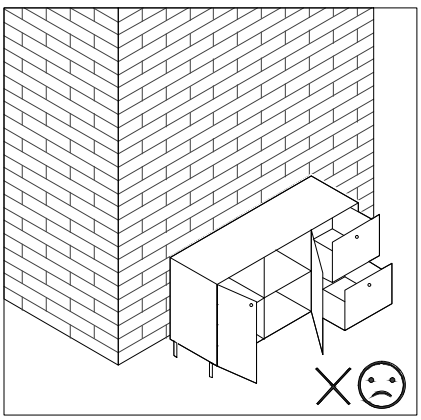

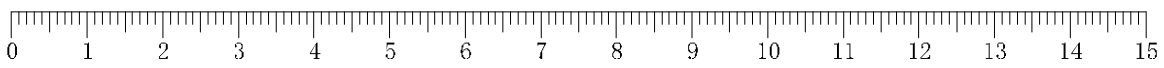
0 1 2 3 4 5 6 7 8 9 10 11 12 13 14 15