17130020-01
KOMMODE

BDSK Handels GmbH & Co.KG
Mergentheimer Straße 59
DE-97084 Würzburg
E-Mail:Info@xxxlutz.at

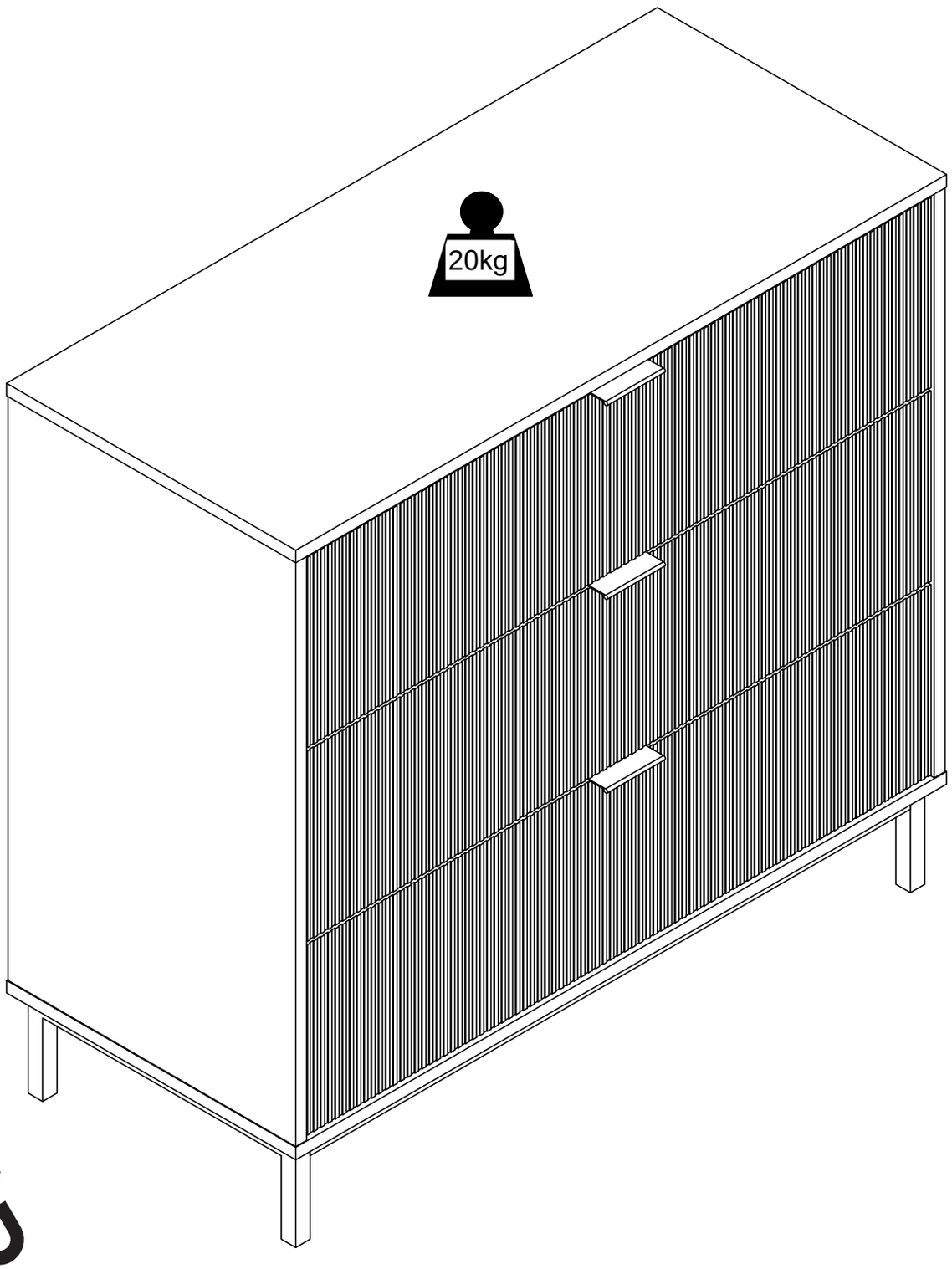

22
PAP

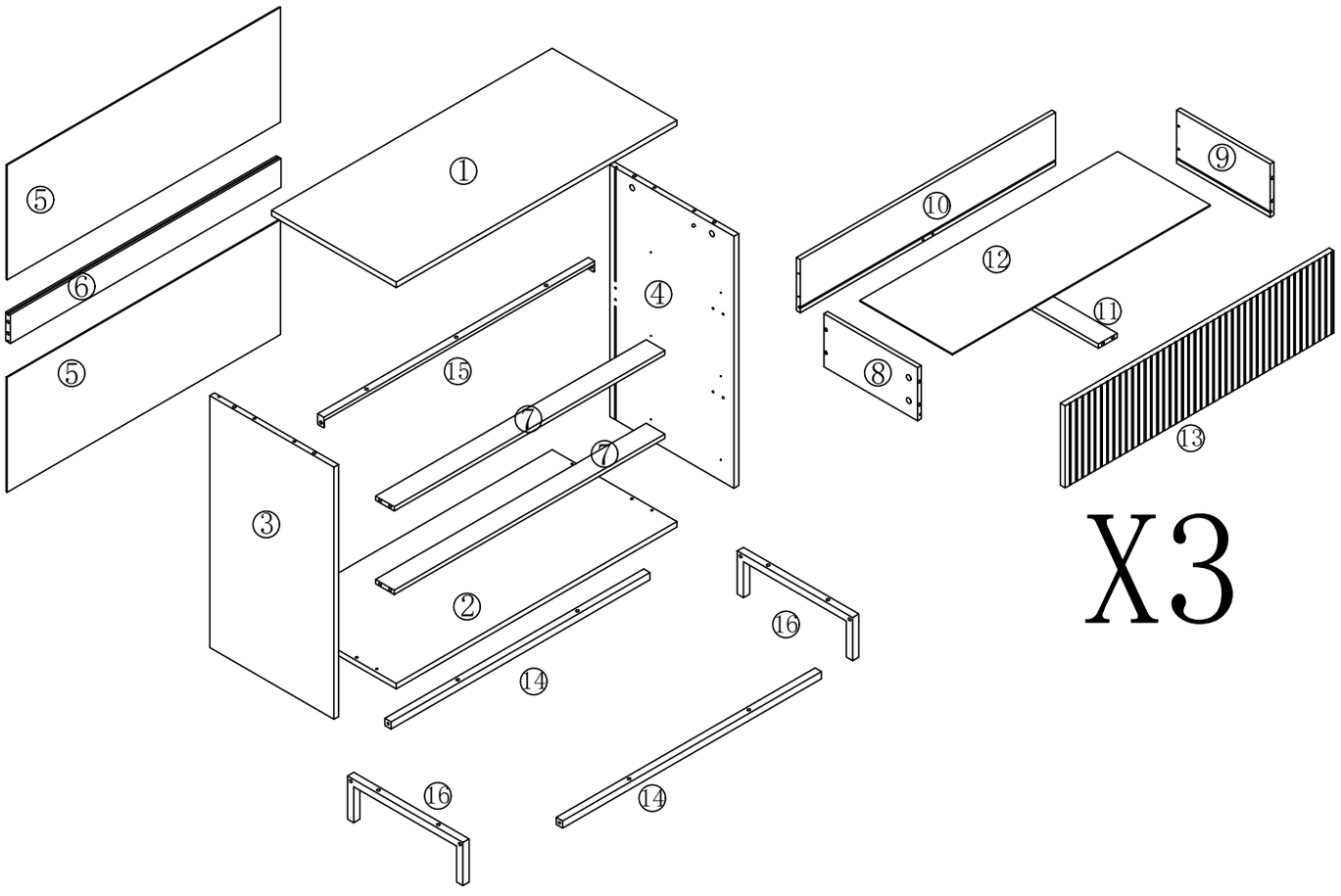

X3

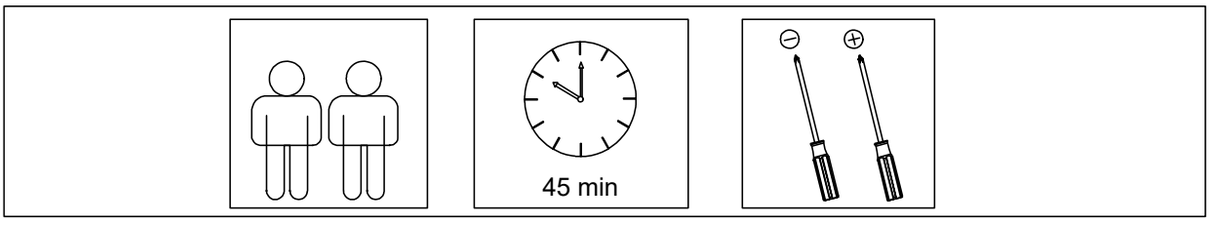

A	×34	B	×34	C	×8	D	×24	E	×30	F	×11	G	×4
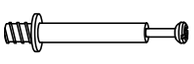				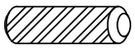		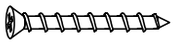							
M6x35MM		φ15x10		Φ 6x30		M4x40MM		M3x12MM		M6x30MM		M6x40MM	

H	×1	I	×16	J	×3	K	×2	L	×8	M	×2	N	×2
				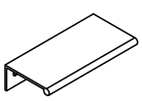			M6x15MM	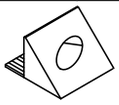					

O	×14	DL	×3	DR	×3	CL	×3	CR	×3
		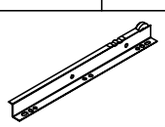		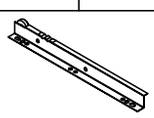		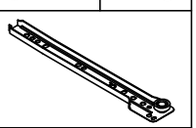		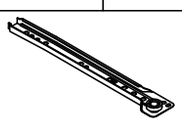	
M3.5x14MM		300mm		300mm		300mm		300mm	

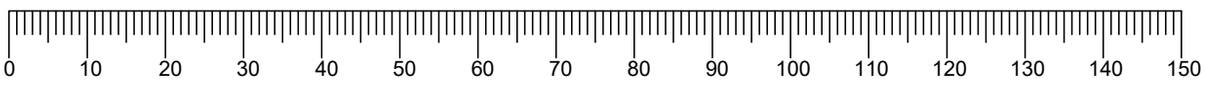

①

A	×16
M6x35MM	

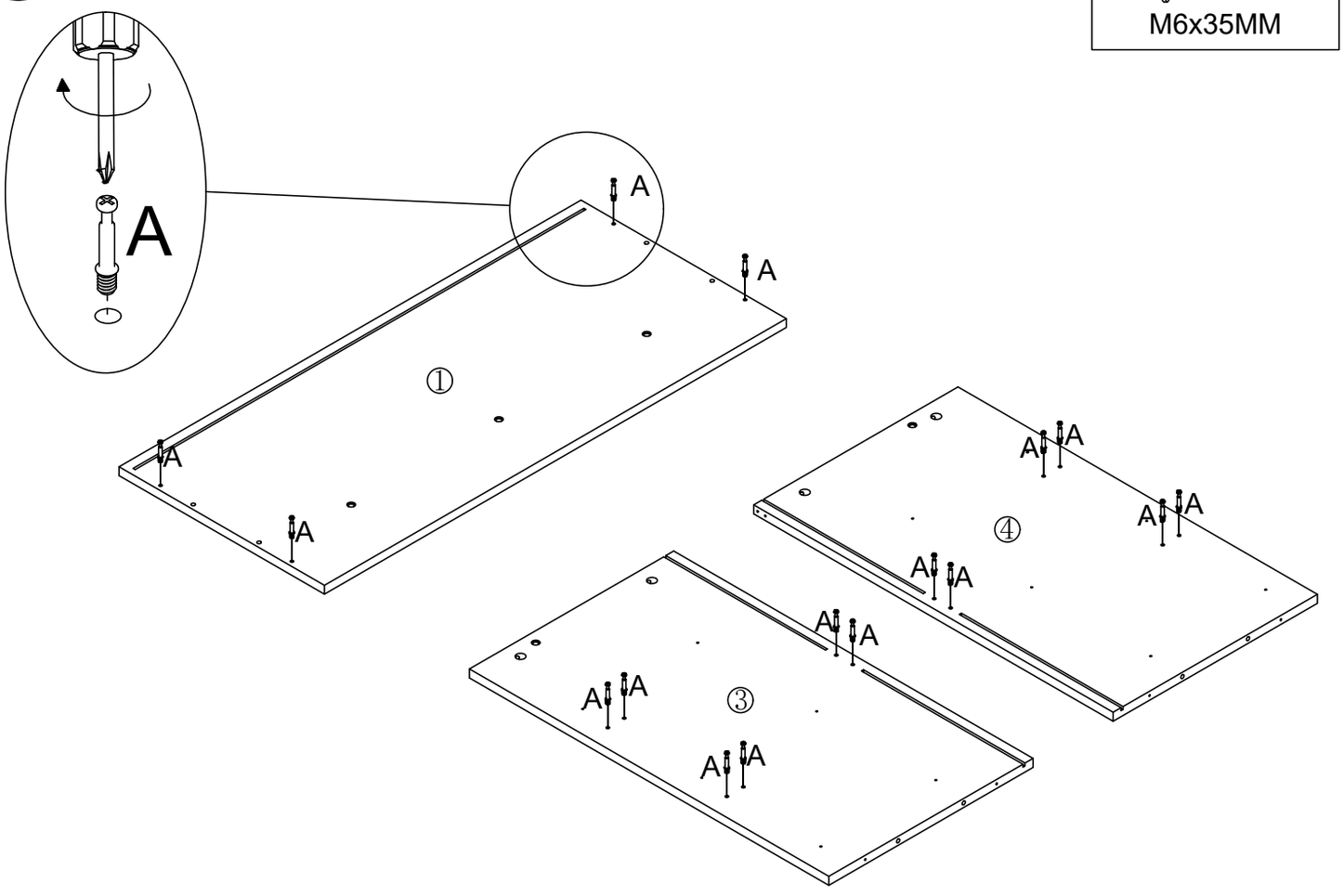

②

CL	×3

CR	×3

E	×12
M3x12MM	

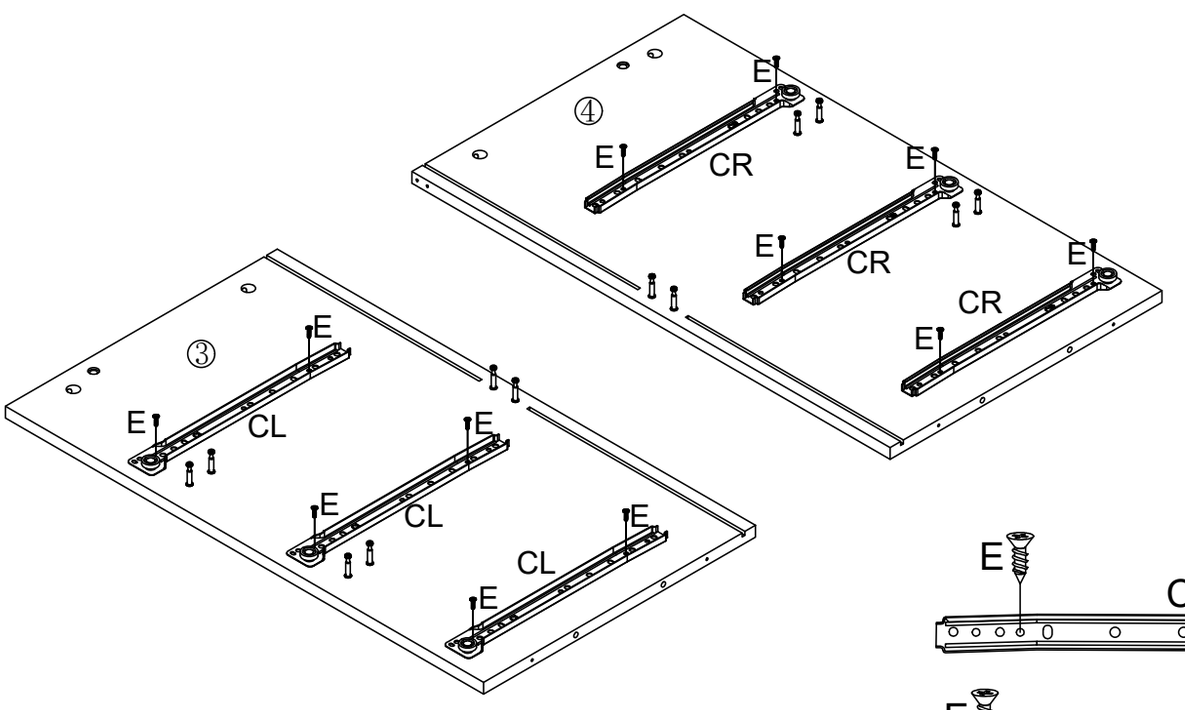

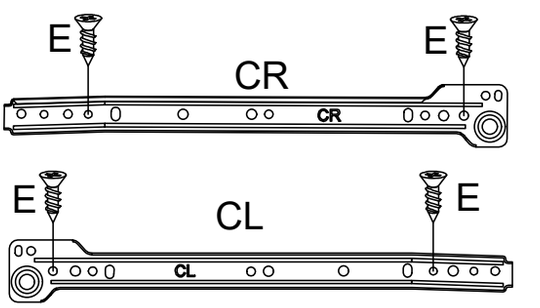

③

B	×6
φ15x9	

K	×1
M6x15MM	

H	×1

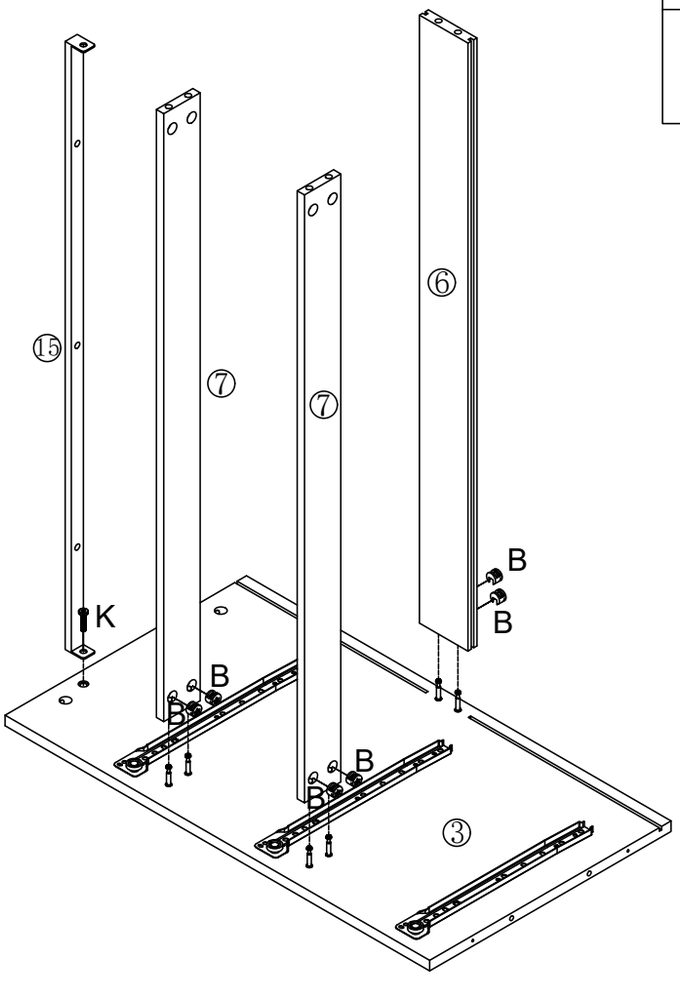

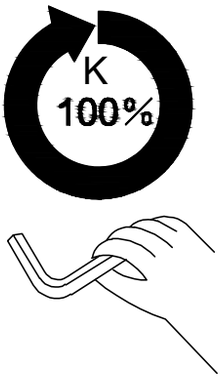

④

B	×6
φ15x9	

K	×1
M6x15MM	

H	×1

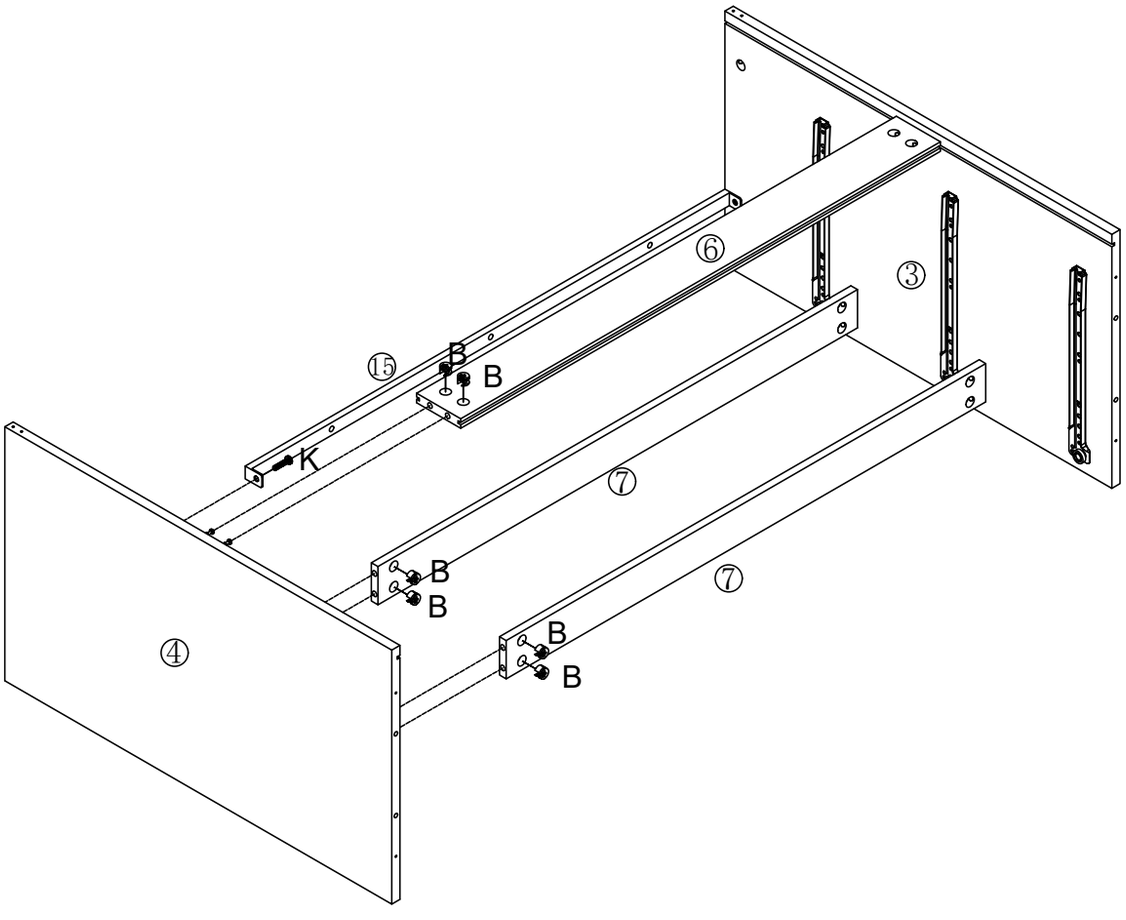

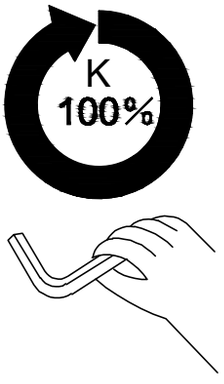

5

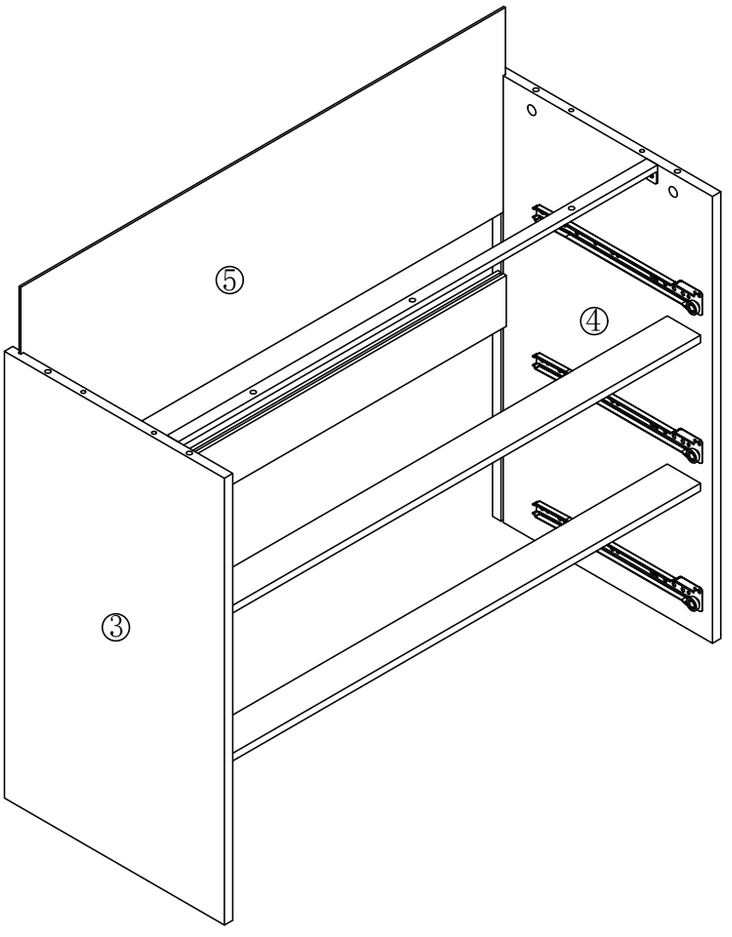

6

B	×4
φ15x9	

C	×4
φ6x30	

I	×4

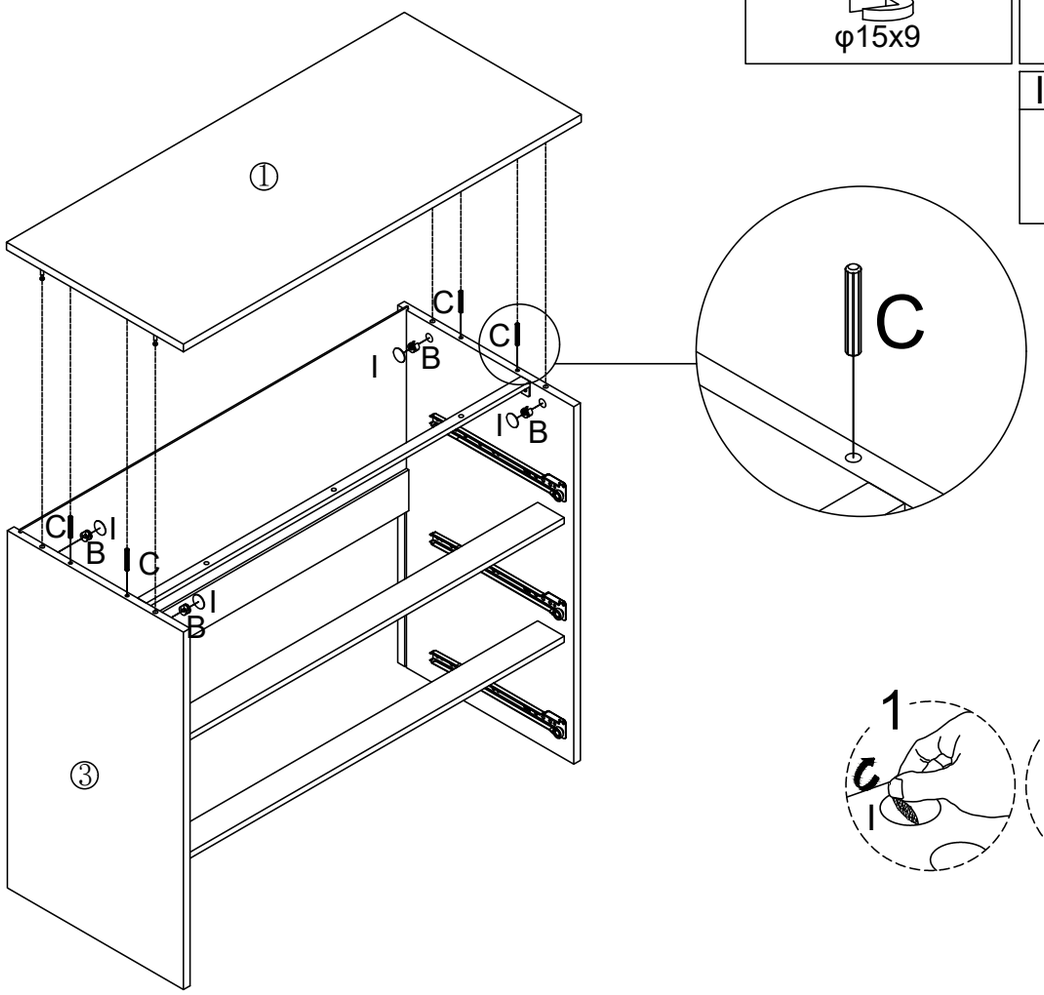

7

F	×3	H	×1
M6x30MM			

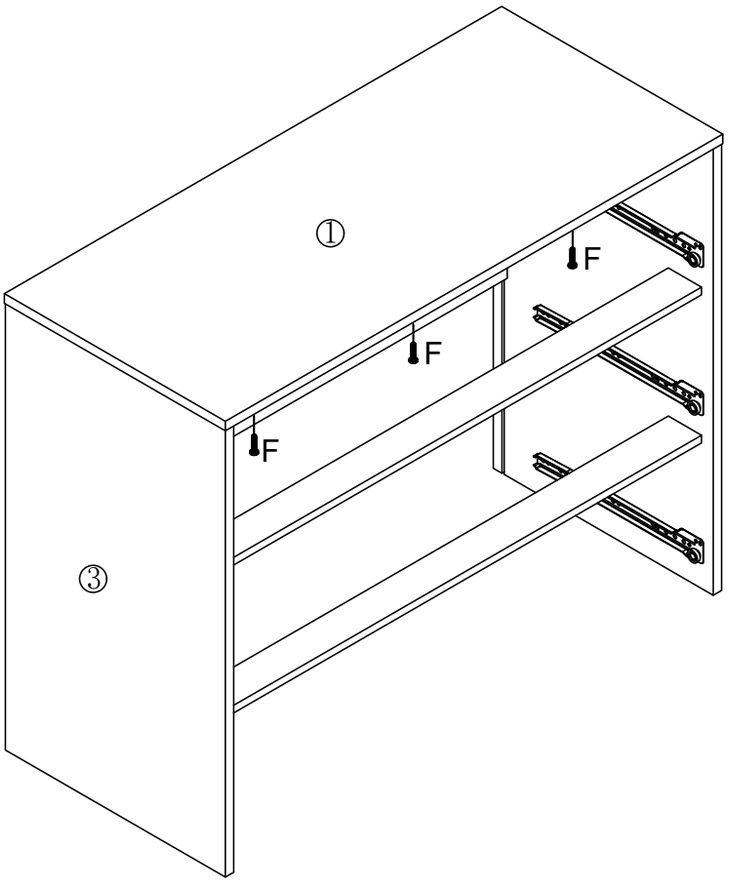

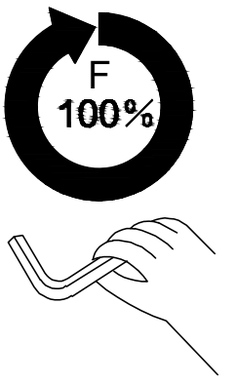

8

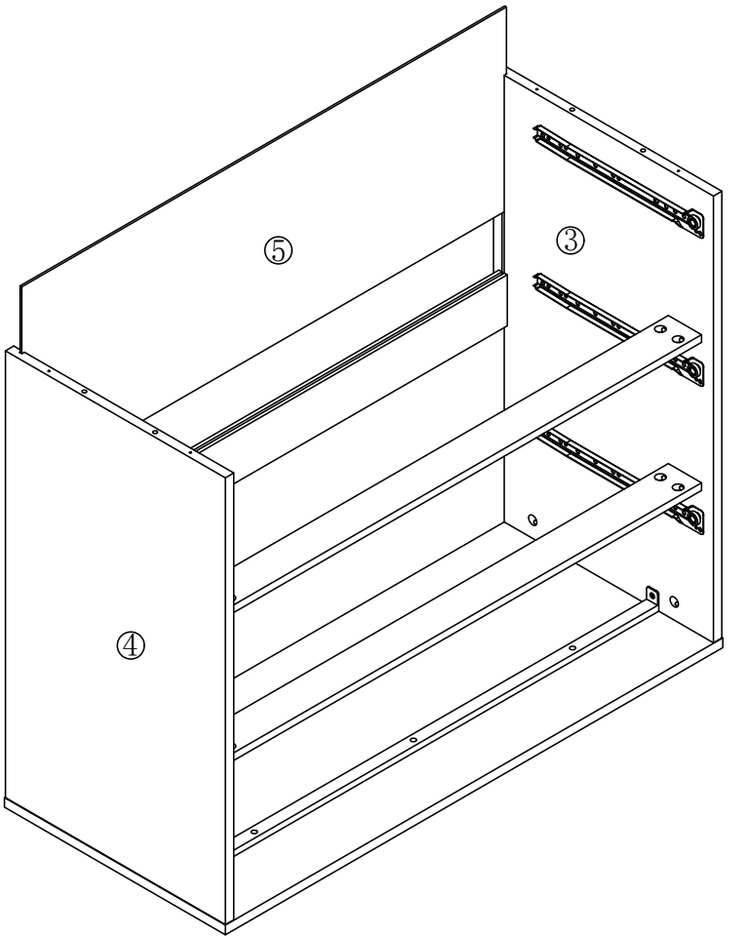

9

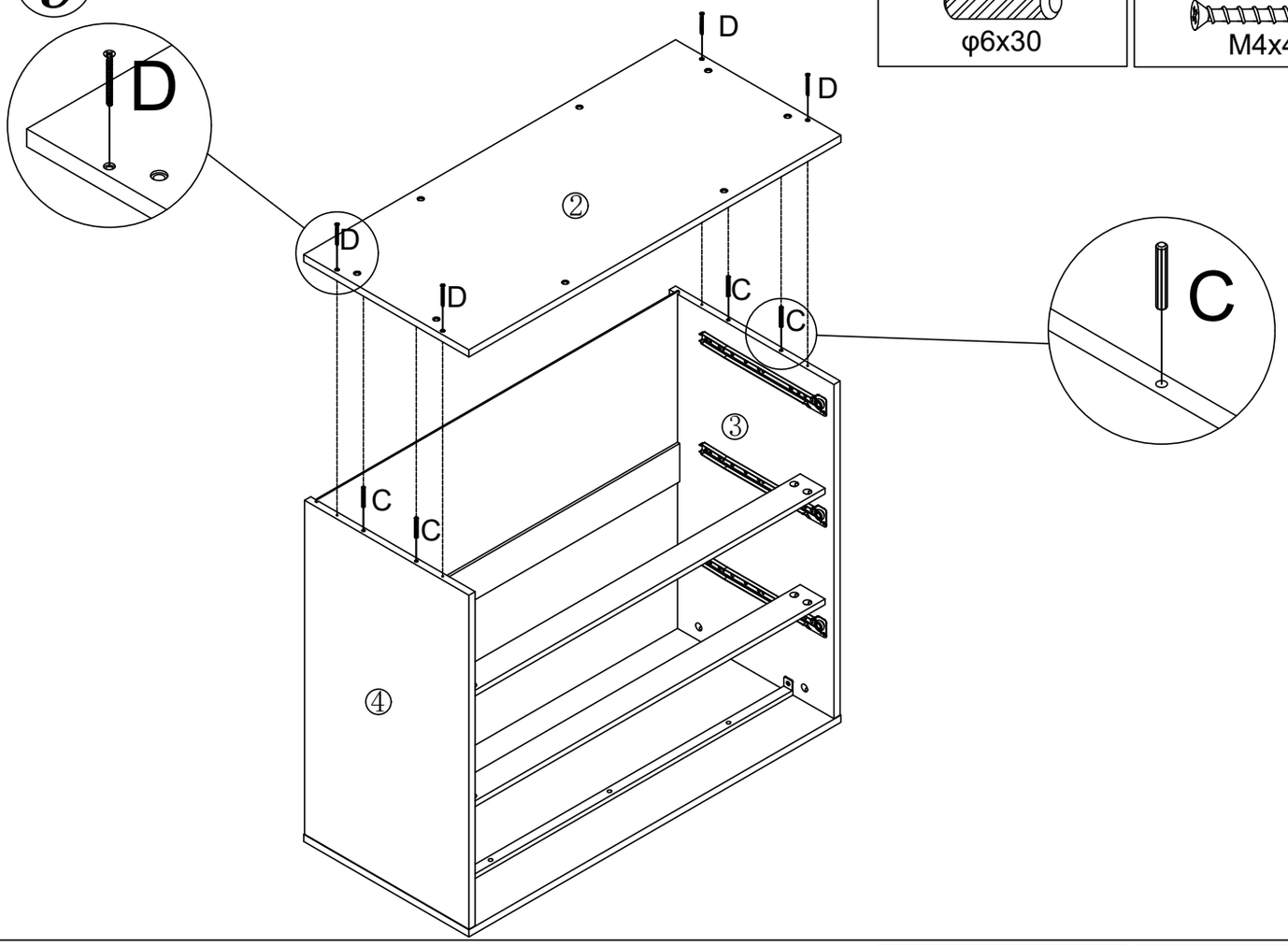

C	×4
φ6x30	

D	×4
M4x40MM	

10

G	×4
M6x40MM	

H	×1

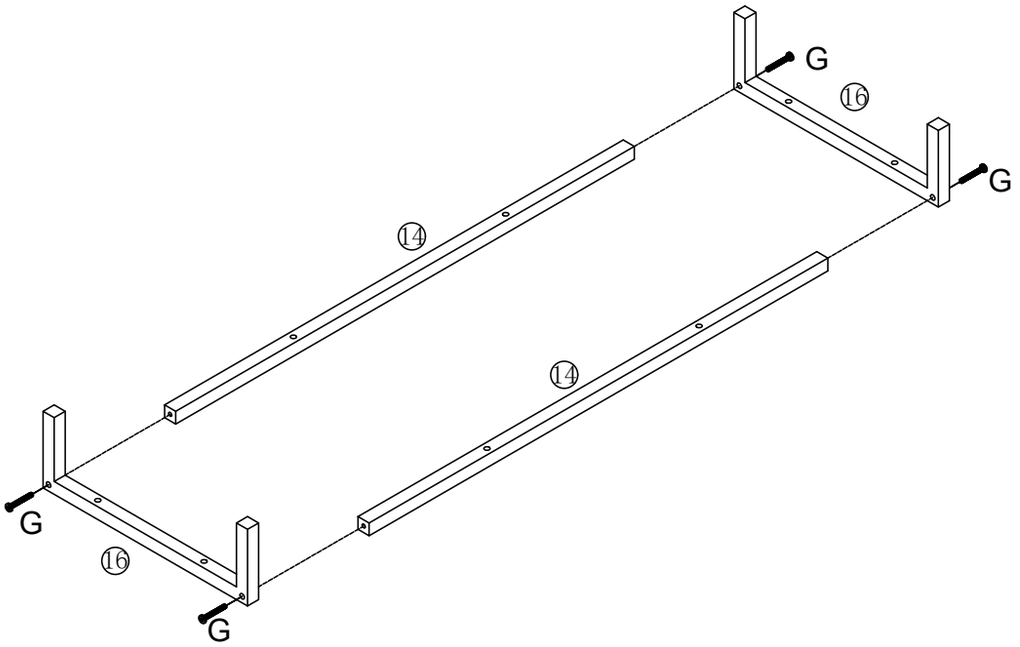

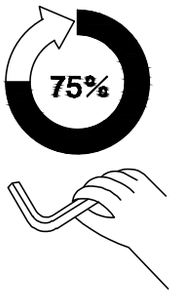

11

F	×8
M6x30MM	

H	×1

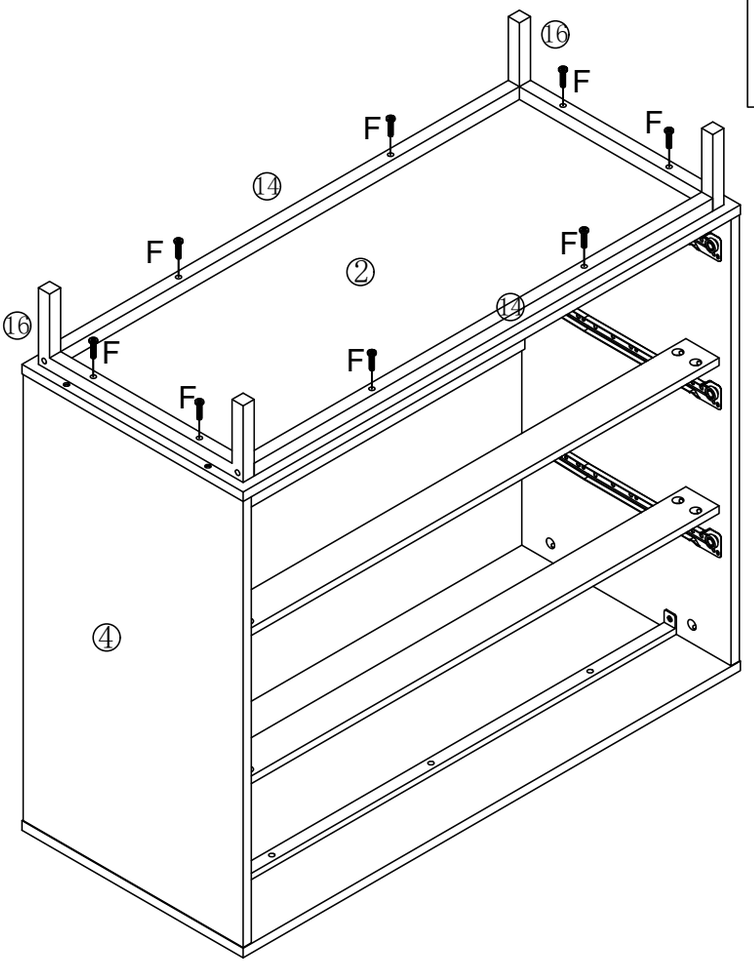

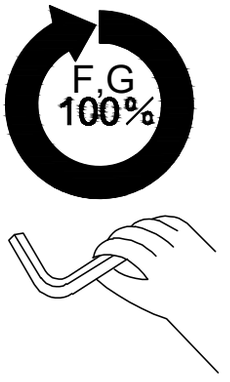

12

A	×18
M6x35MM	

E	×6
M3x12MM	

J	×3

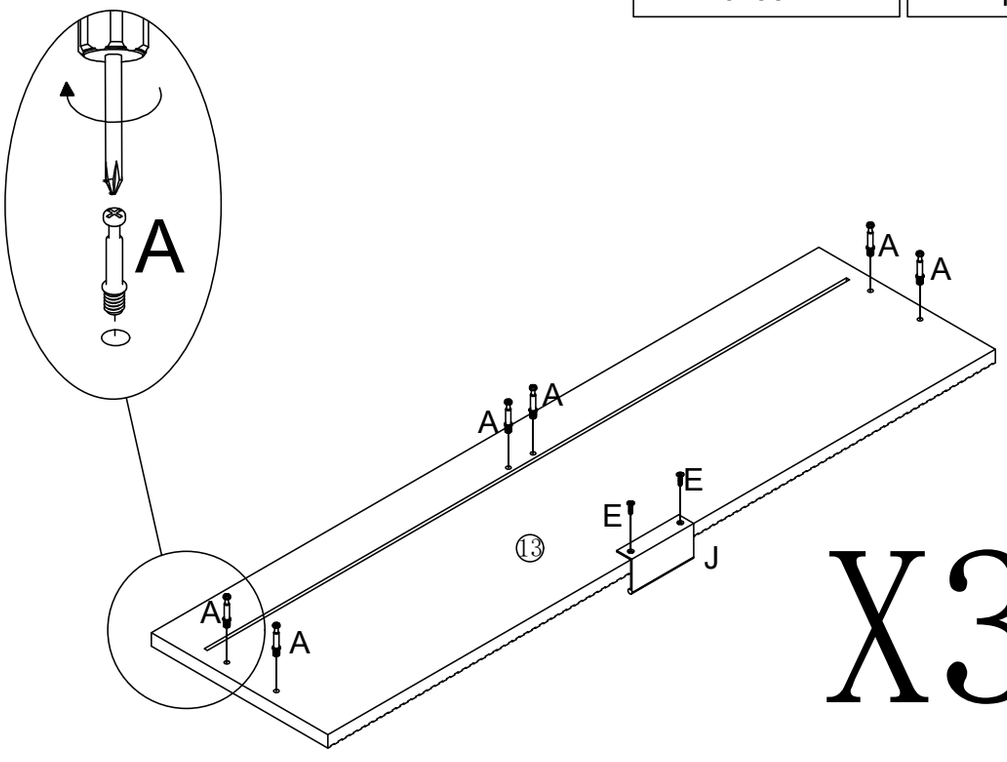

X3

13

D	×18
 M4x40MM	

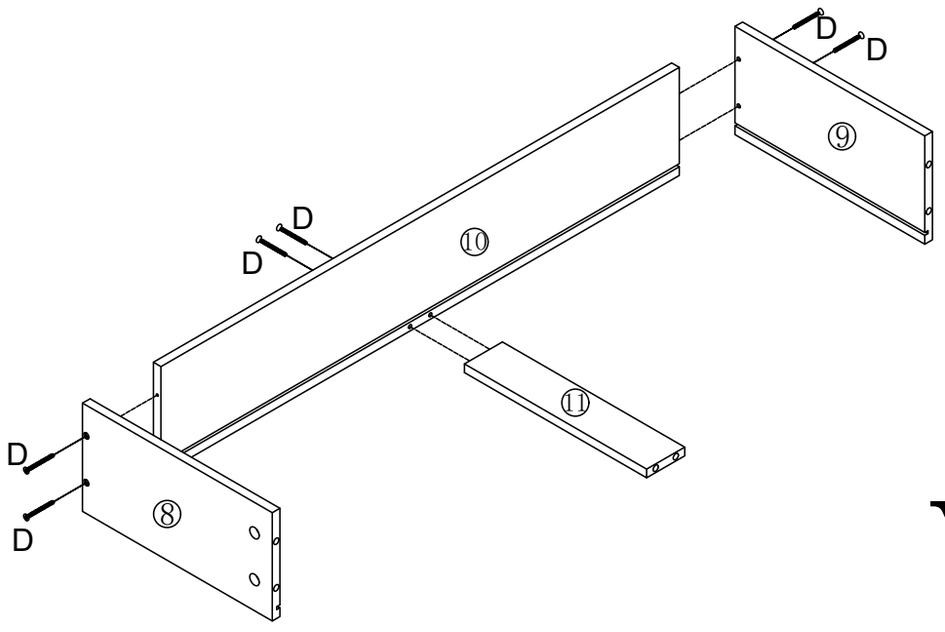

X3

14

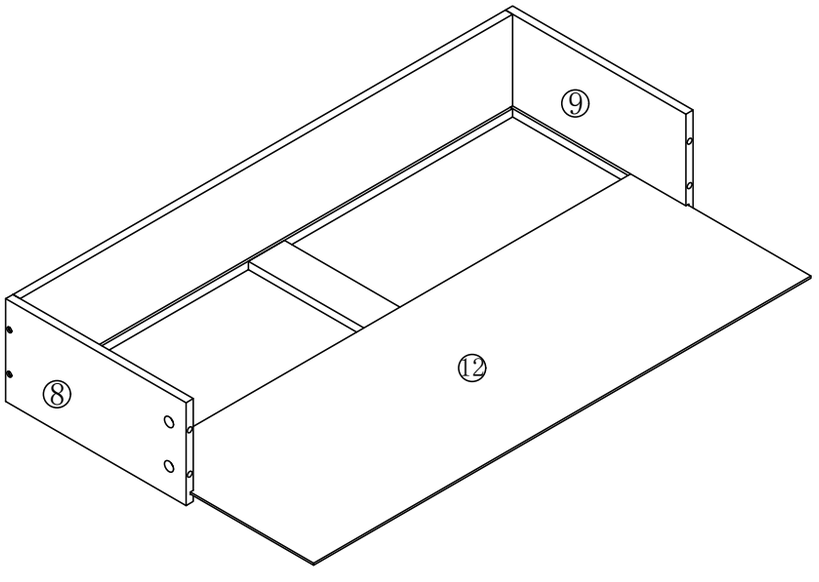

X3

15

B	×18
φ15x9	

I	×12

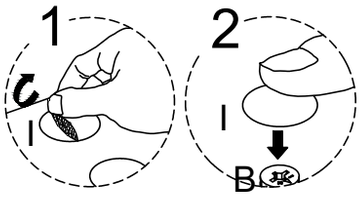

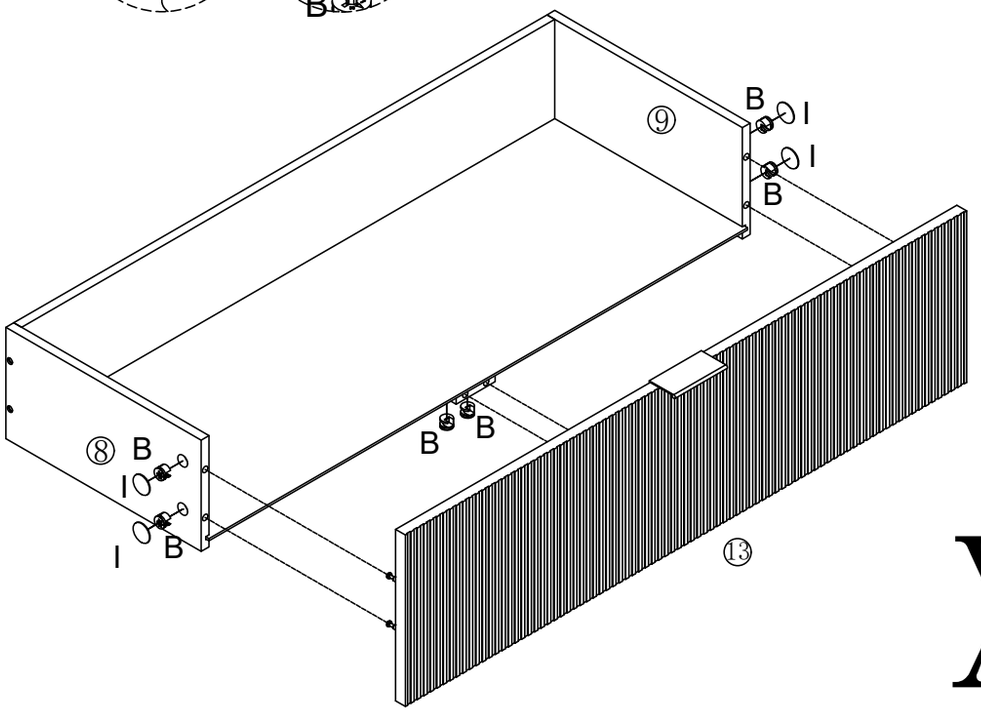

X3

16

E	×12
M3x12MM	

DL	×3

DR	×3

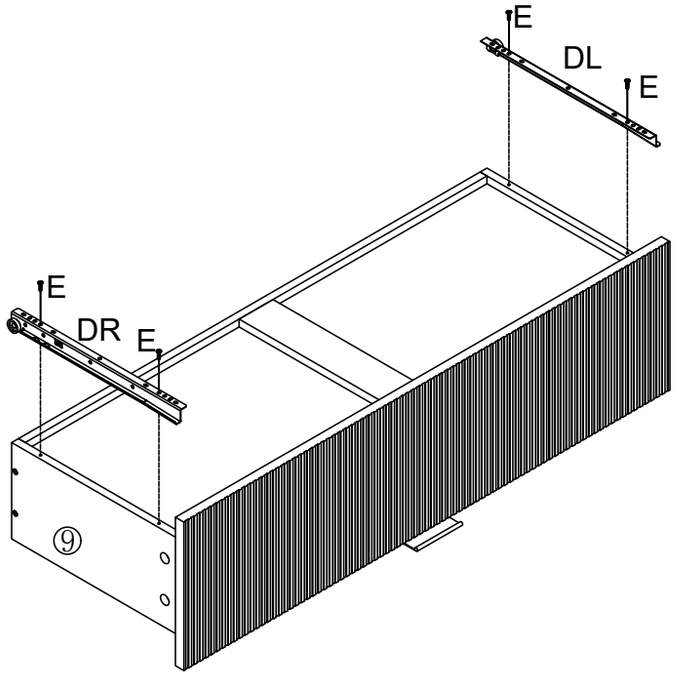

X3

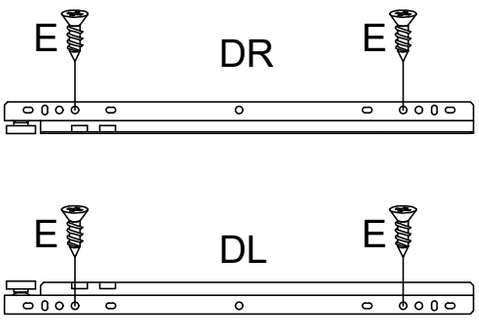

17

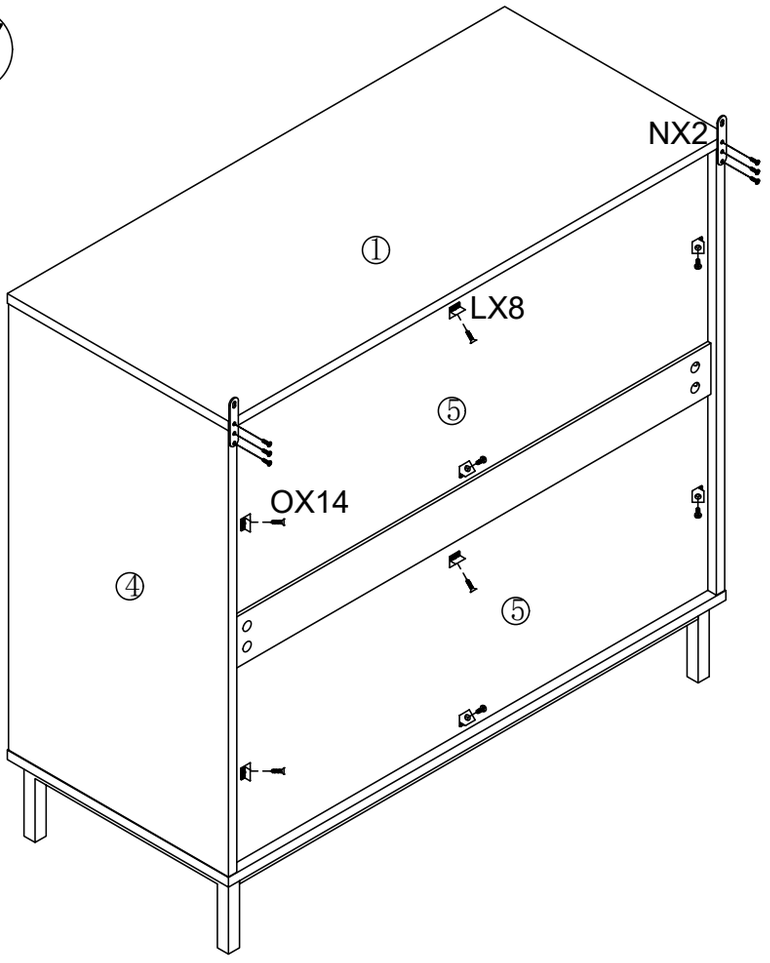

L	×8

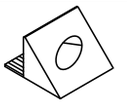

O	×14



M3.5x12MM

N	×2



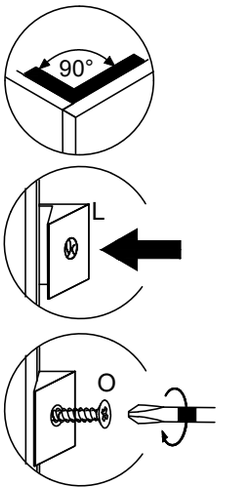

18

D	×2

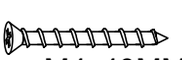

M4x40MM

M	×2

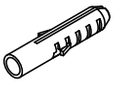

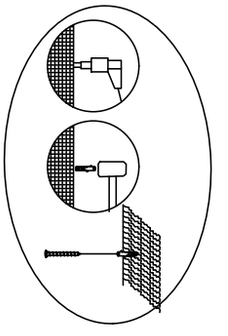

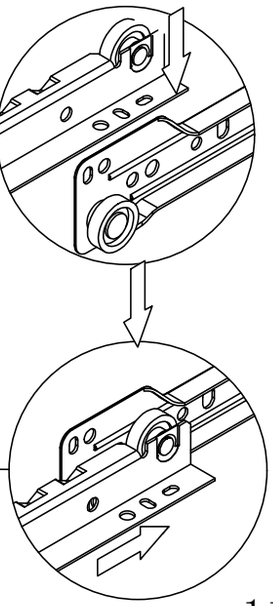

⑲

