# ONDLE

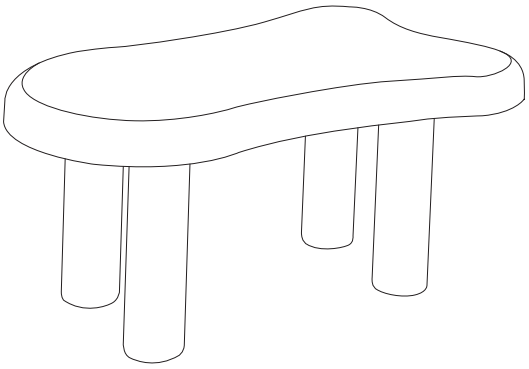

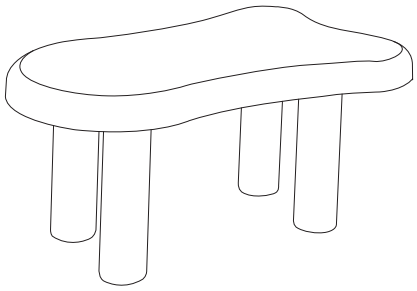

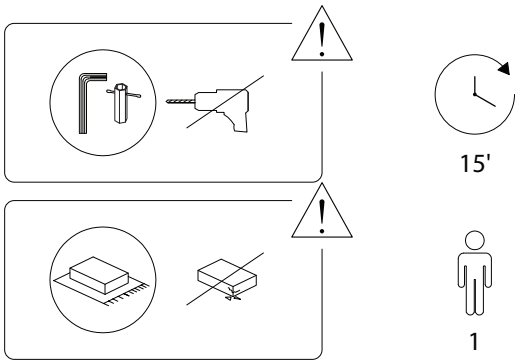


1/4



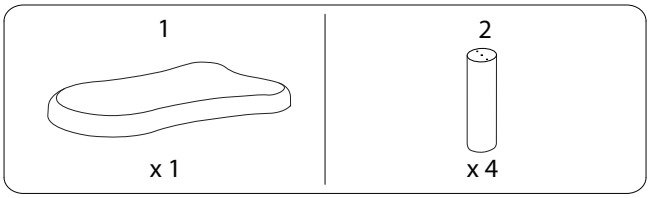


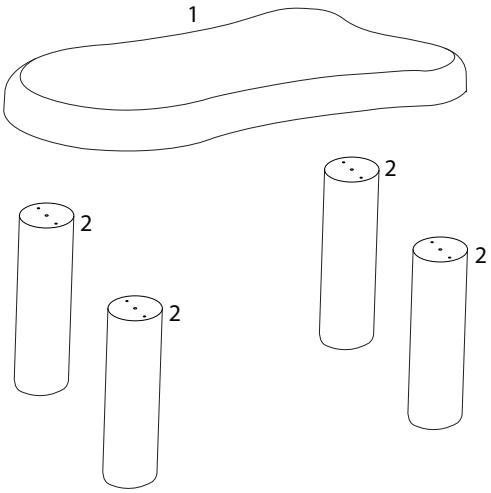


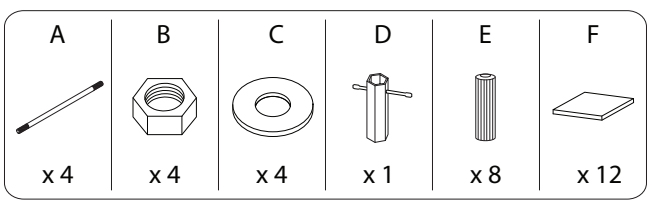


2/4



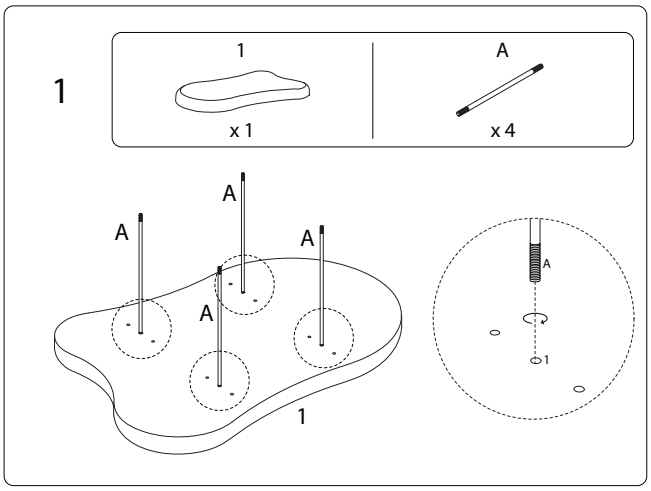


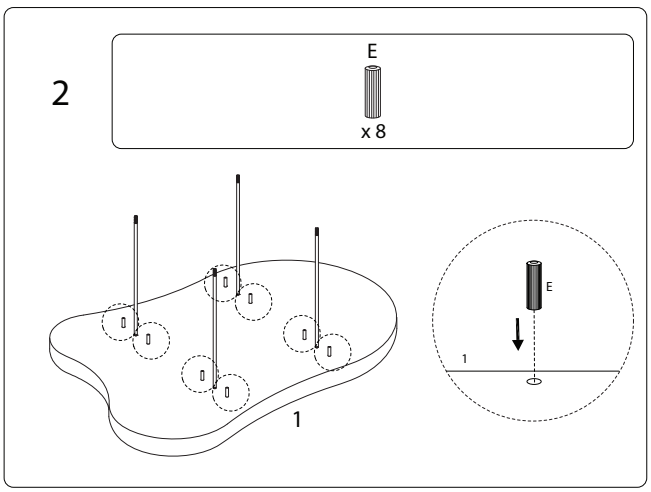


3/4

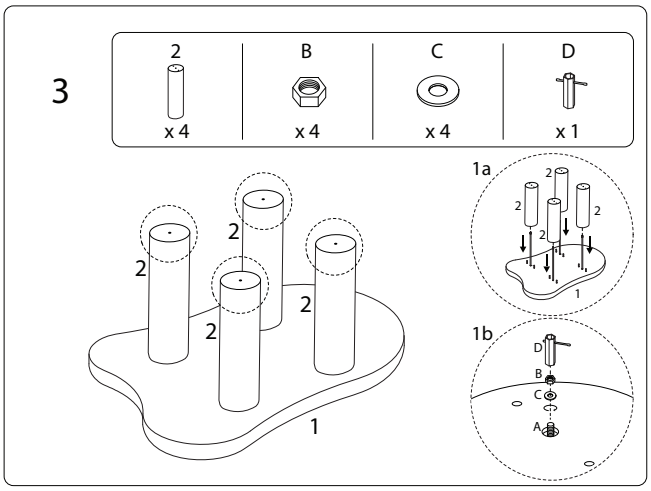


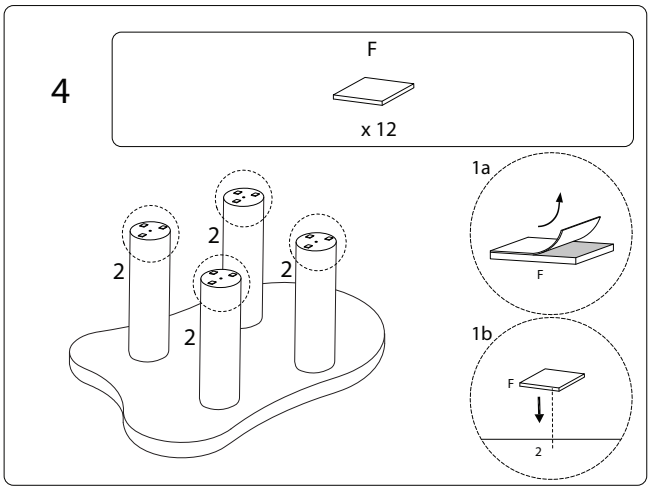




2321/ONDLE/191125/