VAYLA

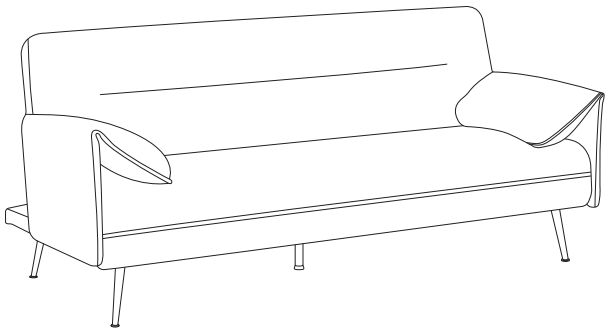

1/5

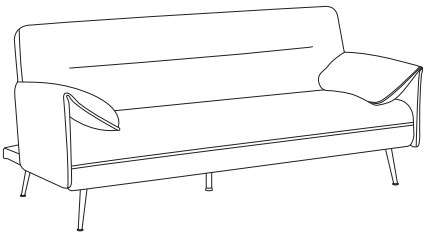

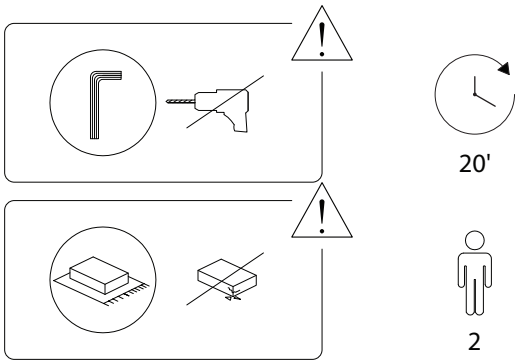

2/5

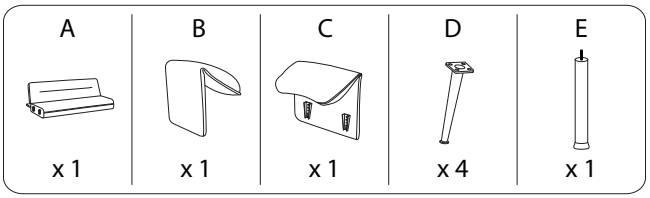

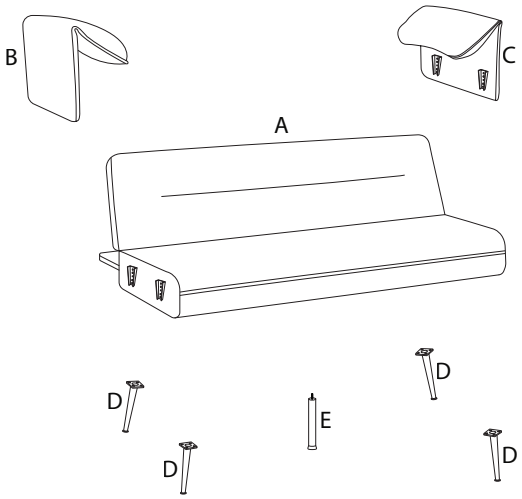

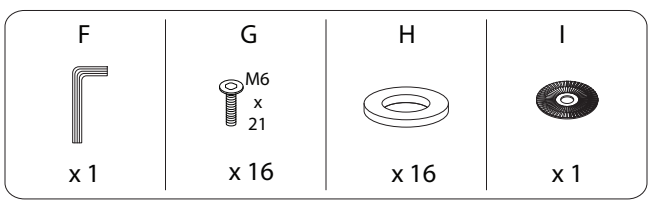

3/5

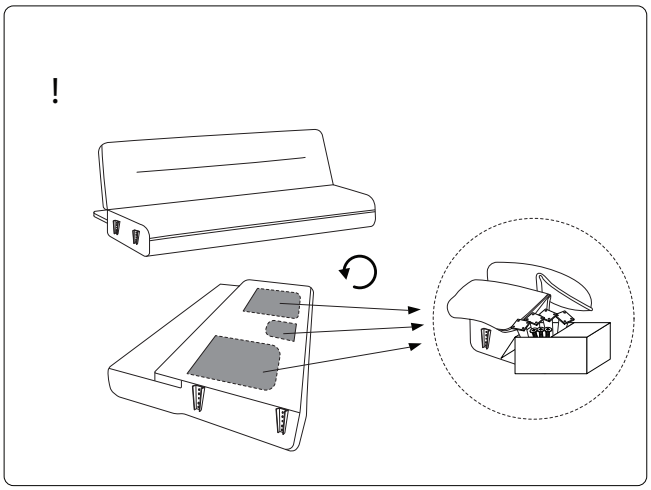

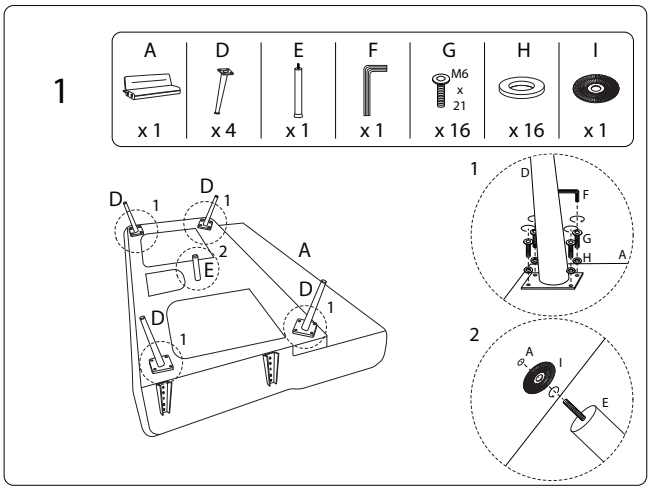

4/5

2

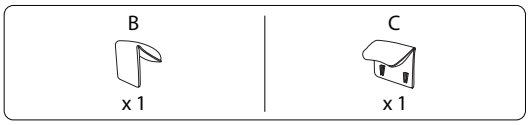

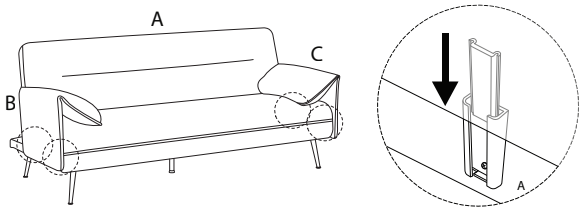

!

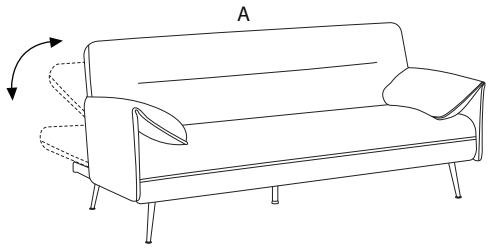

1082/VAYLA/310326/