

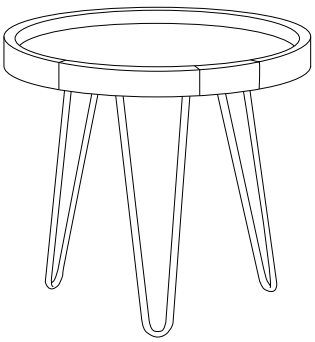

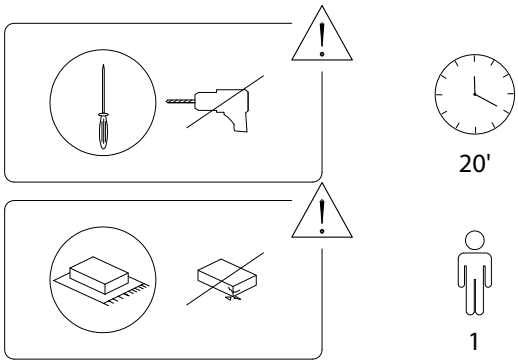

1/3

A x 1

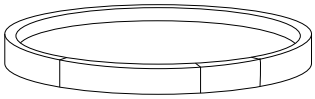

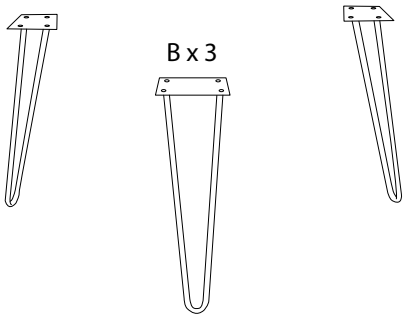

2/3

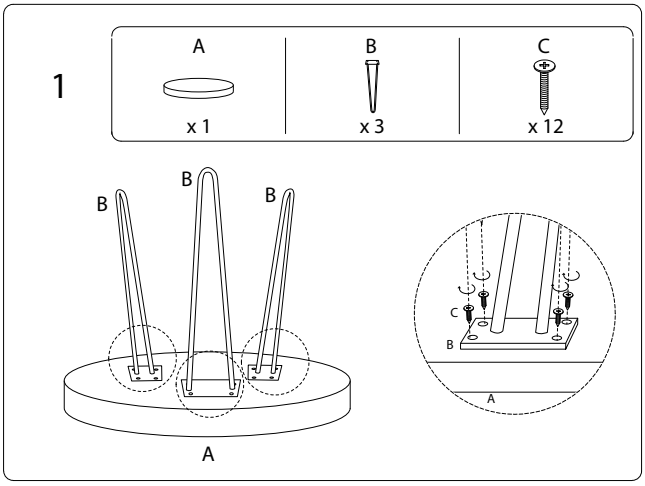

3/3