VISNES

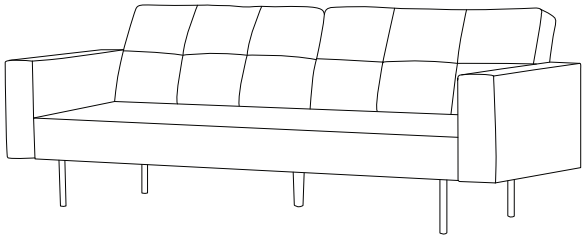

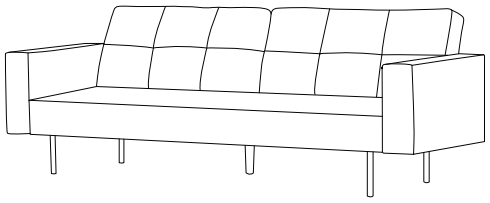

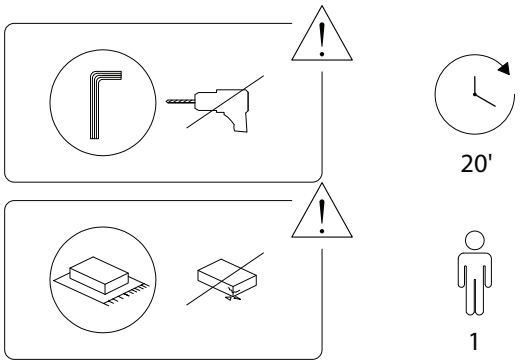
20'
1

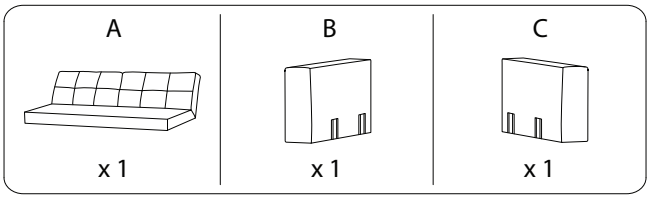
A
x 1
B
x 1
C
x 1

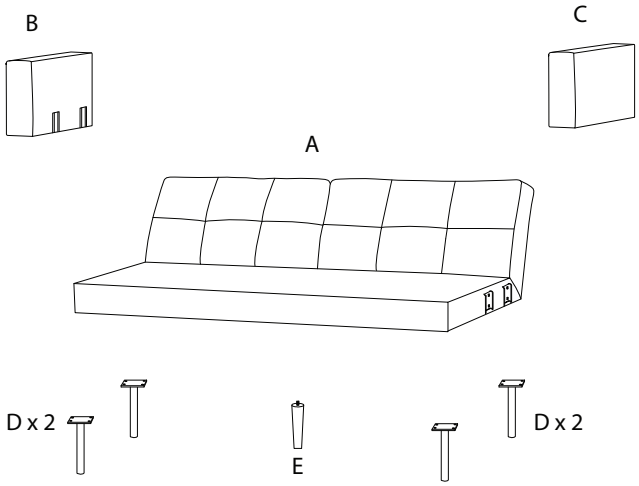
B
C
A
D x 2
E
D x 2

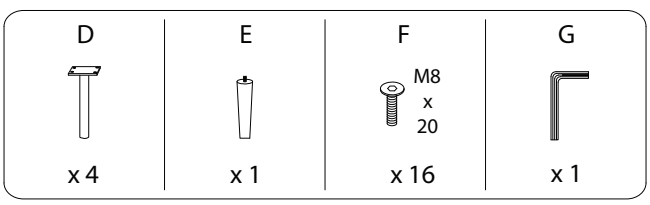
D
x 4
E
x 1
F
M8
x
20
x 16
G
x 1

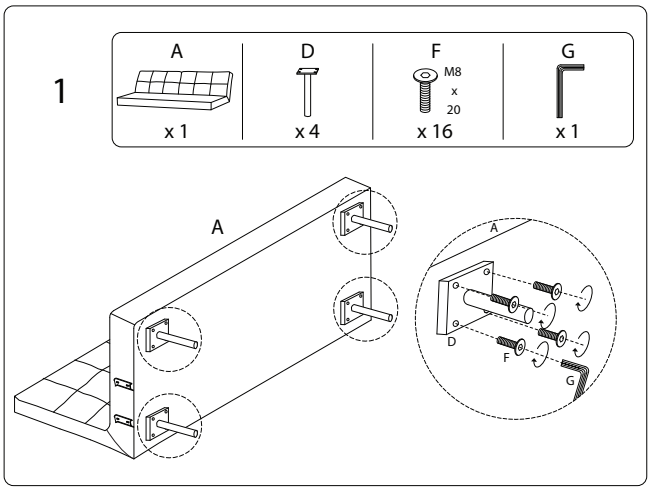
1
A
x 1
D
x 4
F
M8
x
20
x 16
G
x 1
A
A
D
F
G

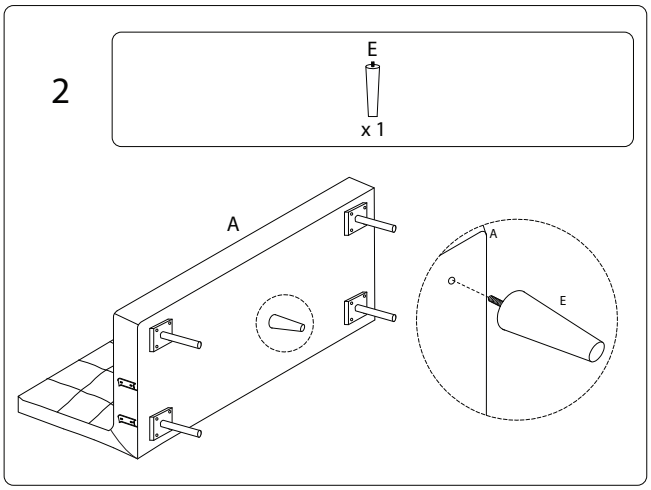
2
E
x 1
A
A
E

3

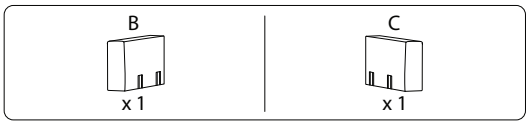

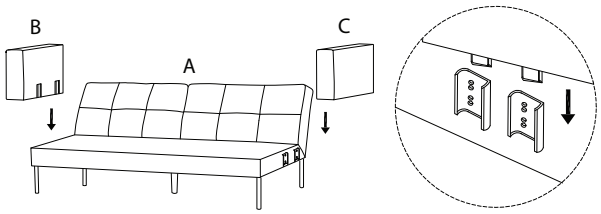

4

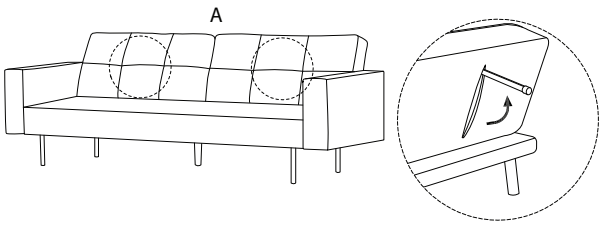

707/VISNES/111024/

5

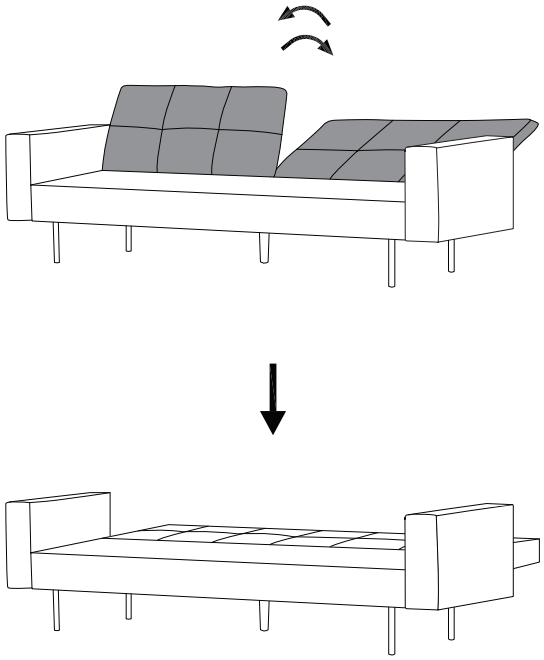

707/VISNES/111024/