SYLVANIA





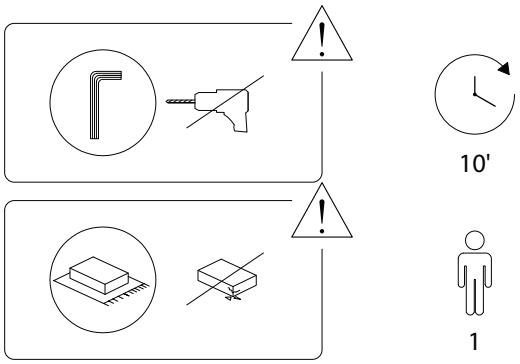

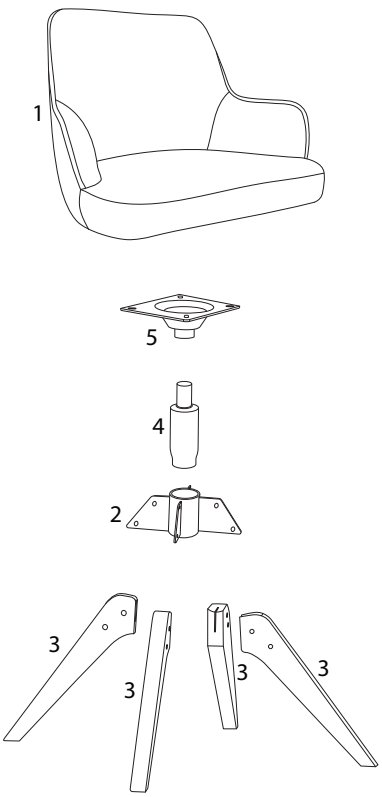

1  x 1	2 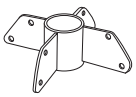 x 1
3  x 4	4  x 1
5  x 1	6  x 4
A  M6 x 20 x 4	B  M6 x 30 x 8	C  M6 x 15 x 8
D  x 12	E  x 2	F  x 8

2432/SYLVANIA/240226/

!

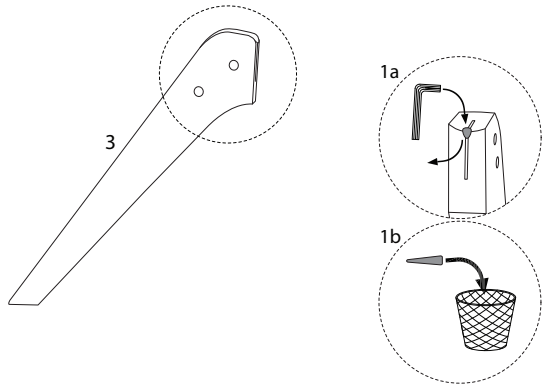

2

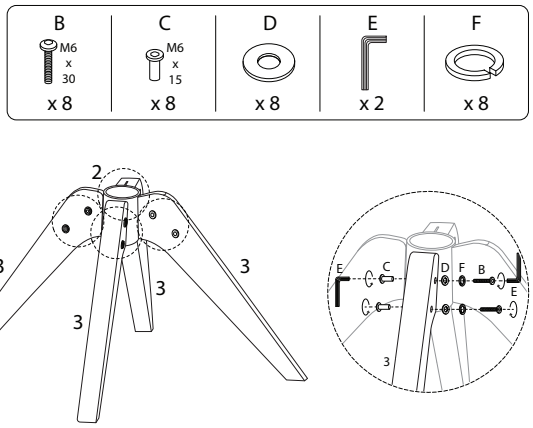

1

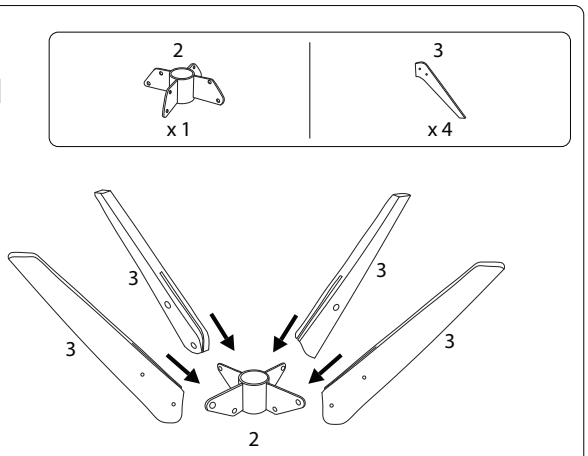

3

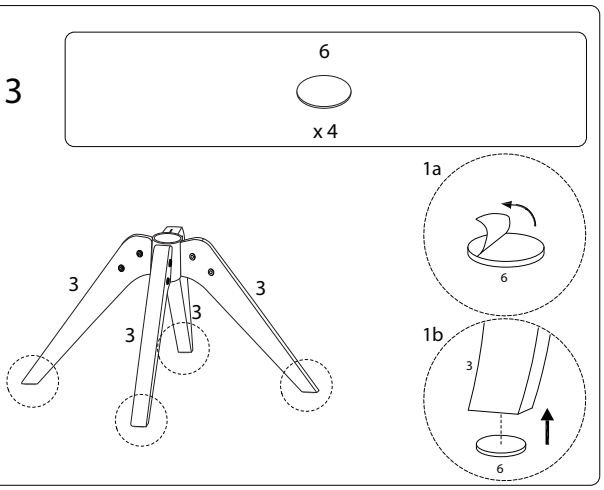

2432/SYLVANIA/240226/

2432/SYLVANIA/240226/

4

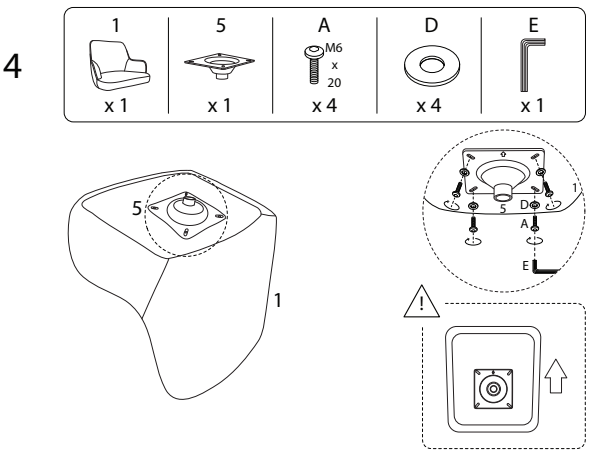

5

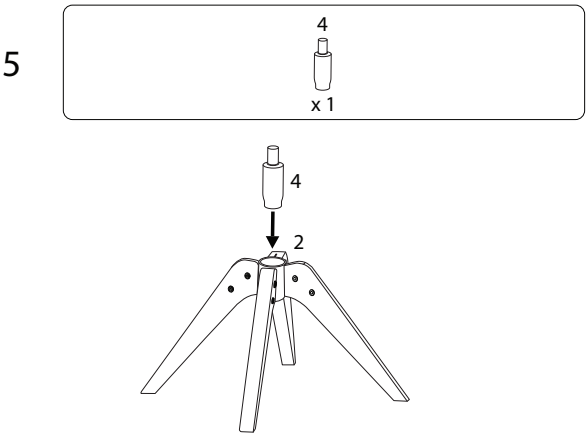

6

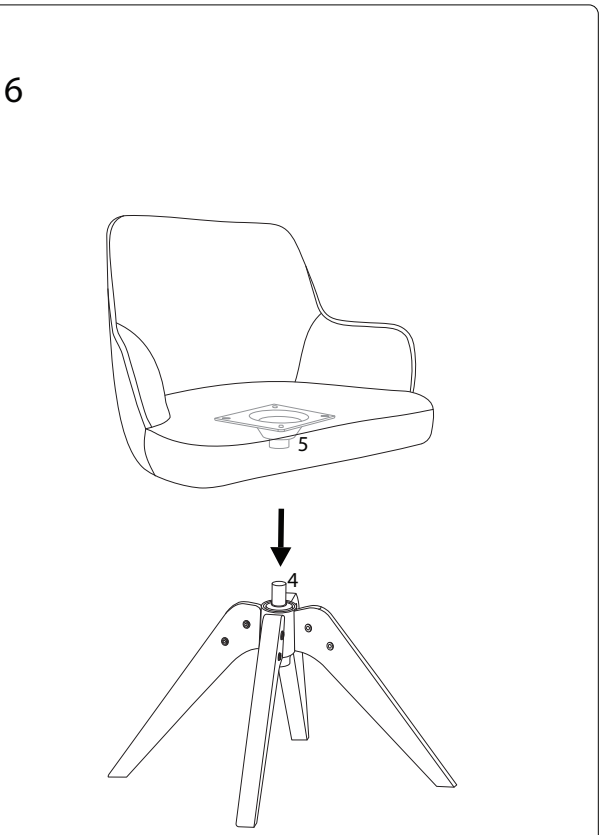

2432/SYLVANIA/240226/

2432/SYLVANIA/240226/