YAPP

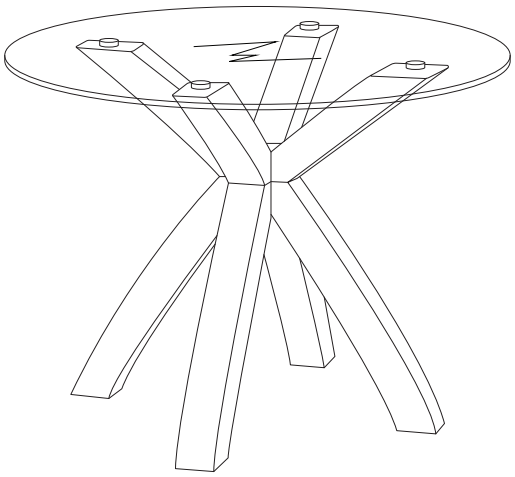

1/8

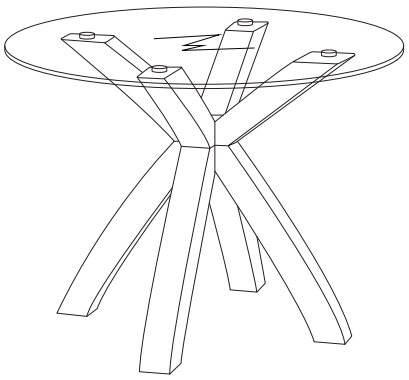

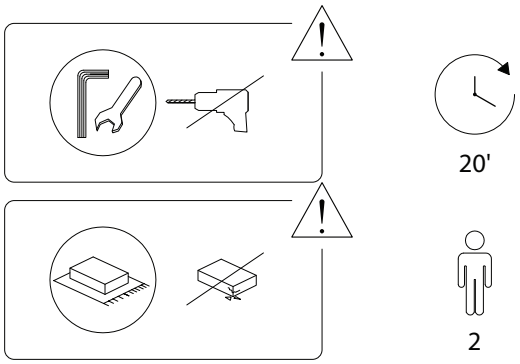

2/8

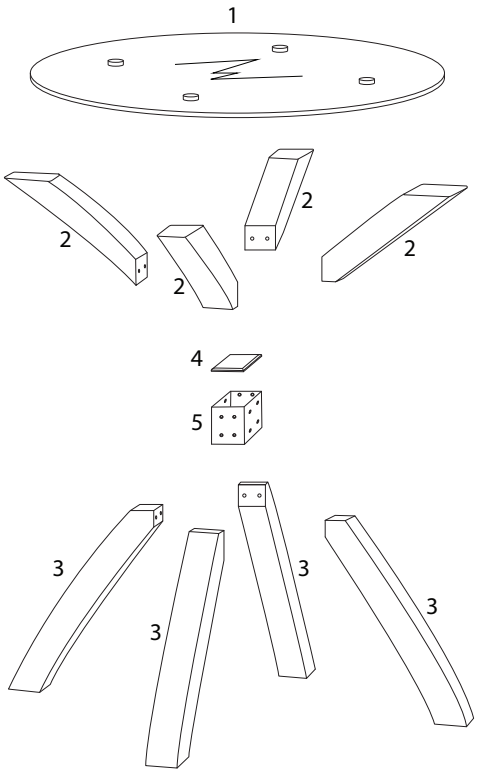

3/8

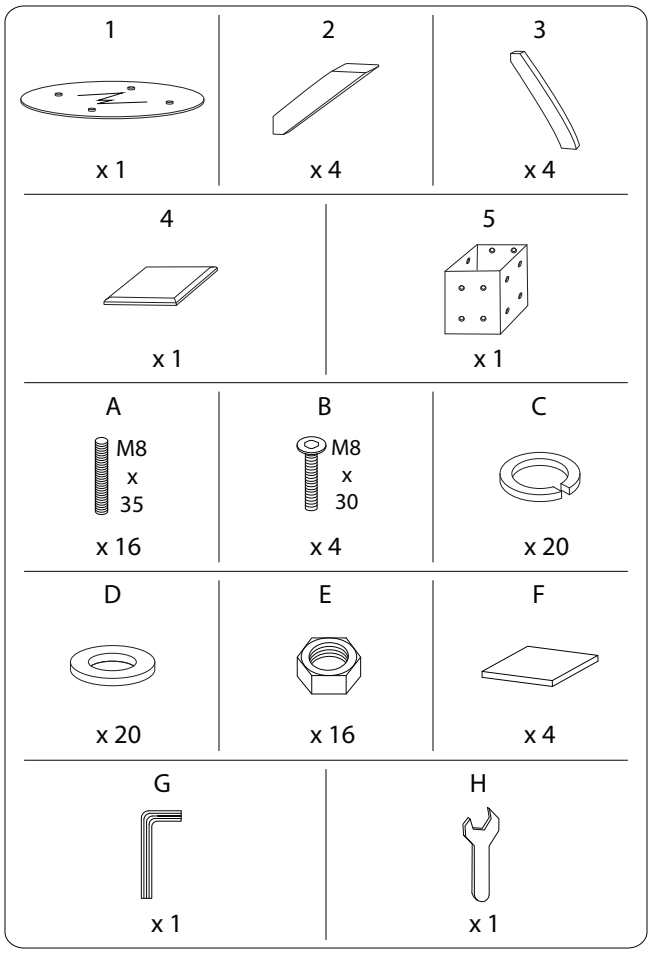

4/8

2661/YAPP/060226/

1 x 4

2	3	A
x 1	x 1	M8 x 35 x 2

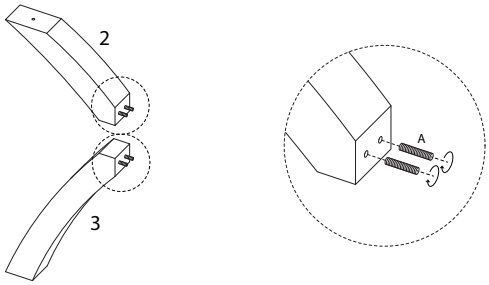

3

C	D	E	H
x 8	x 8	x 8	x 1

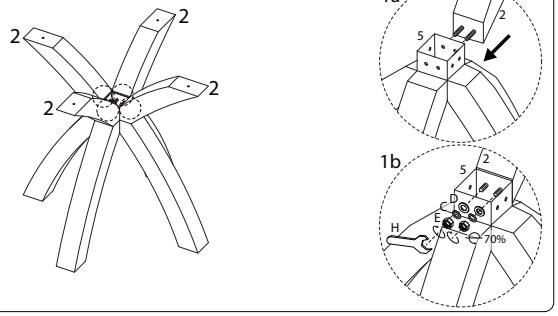

2

5	C	D	E	H
x 1	x 8	x 8	x 8	x 1

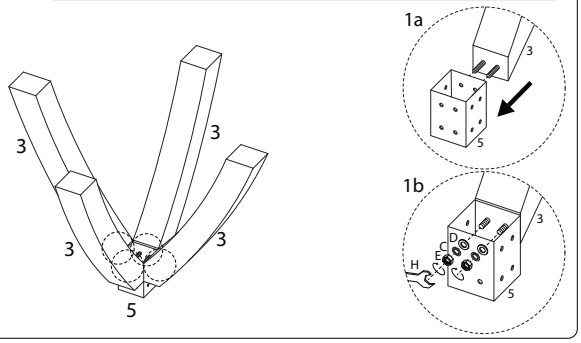

4

1	B	C	D	G
x 1	M8 x 30 x 4	x 4	x 4	x 1

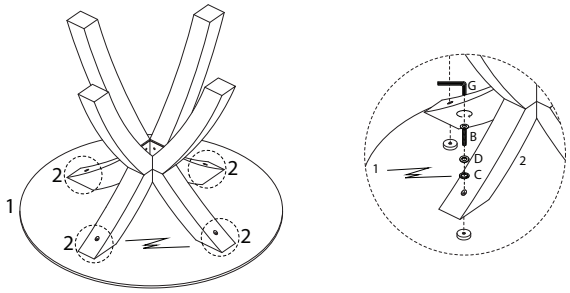

5

H
x 1

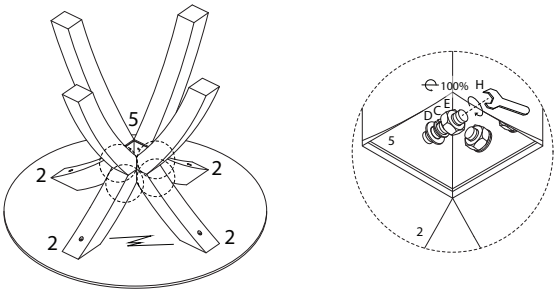

6

F
x 4

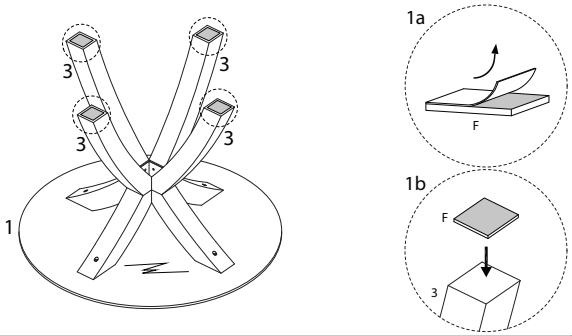

7

4
x 1

