
B x 2

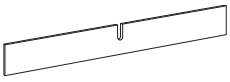
A x 10

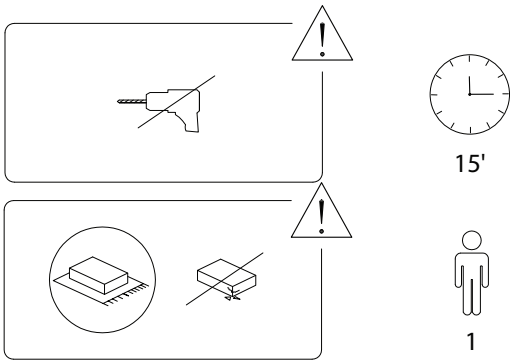
15'
1

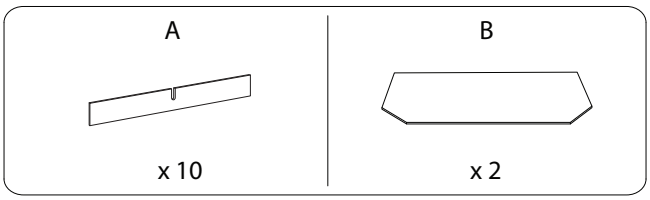
A
x 10
B
x 2

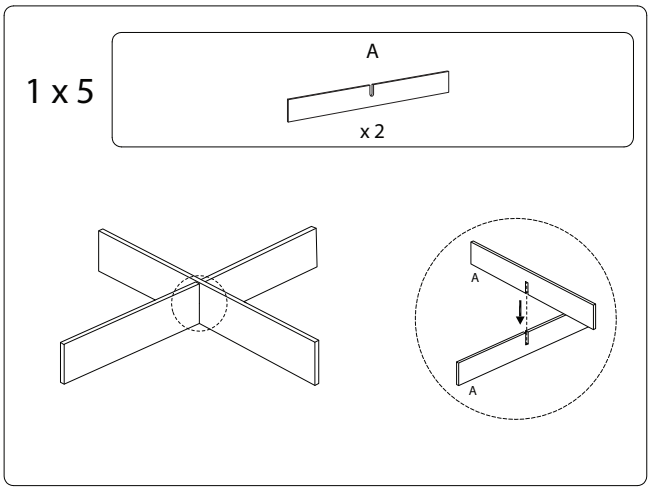
1 x 5
A
x 2
A
A

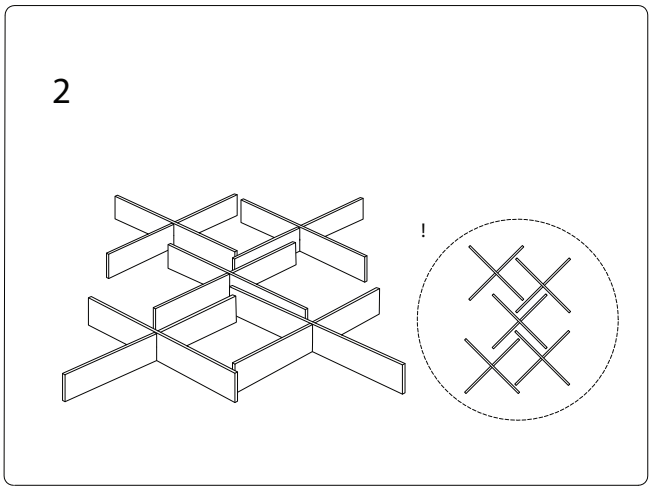
2
!

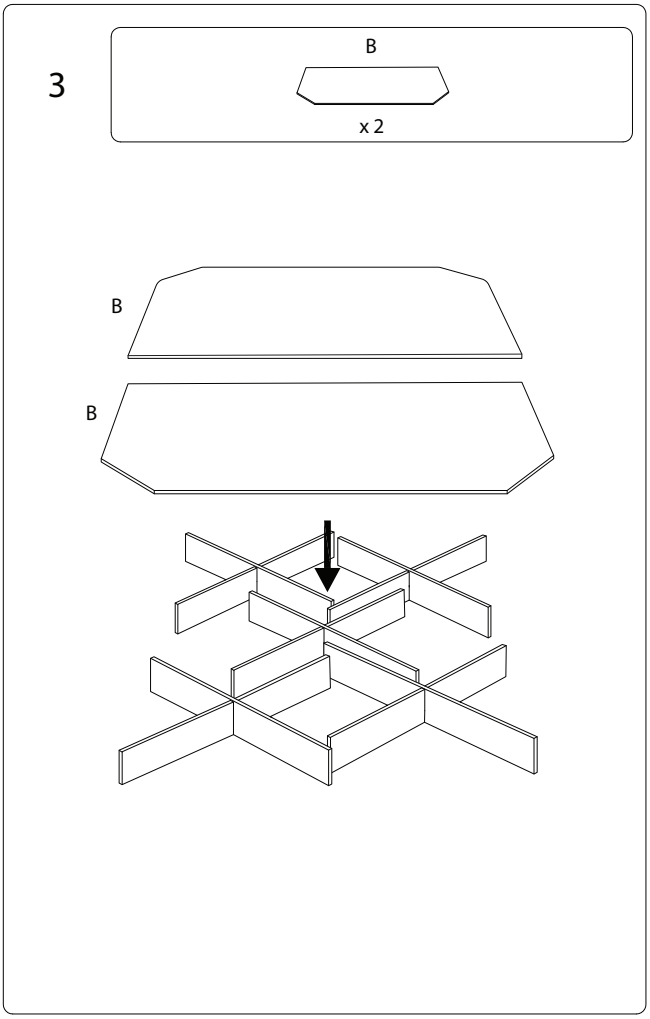
3
B
x 2
B
B