BRADLEY

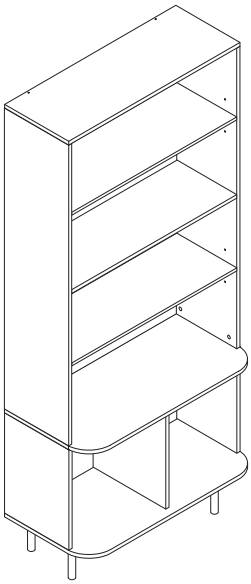

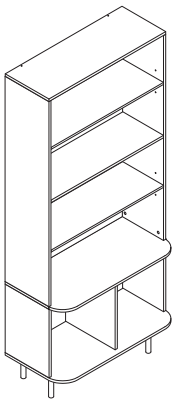

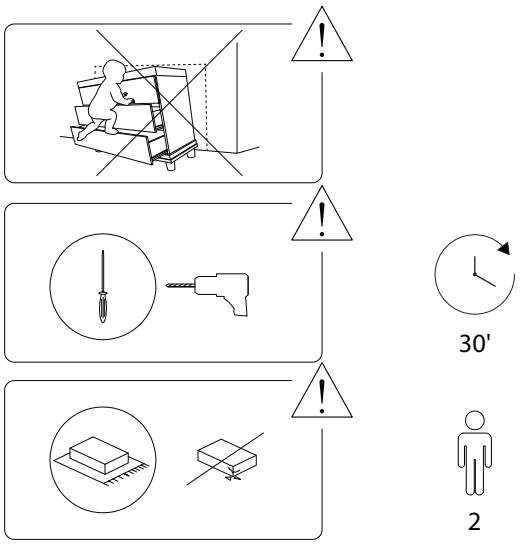
30'
2

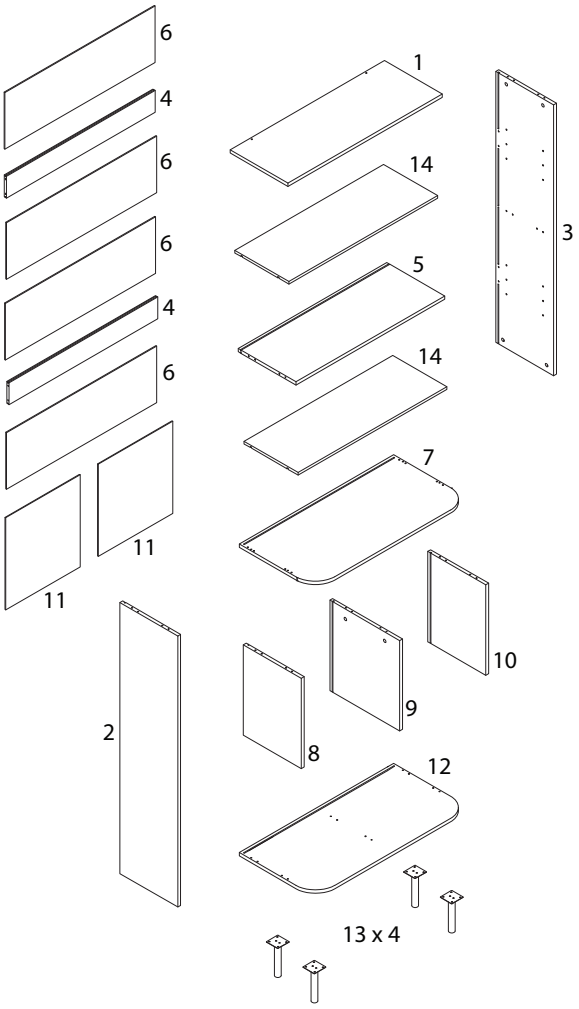
6
4
6
6
4
6
11
11
2
1
14
5
14
7
3
10
9
8
12
13 x 4

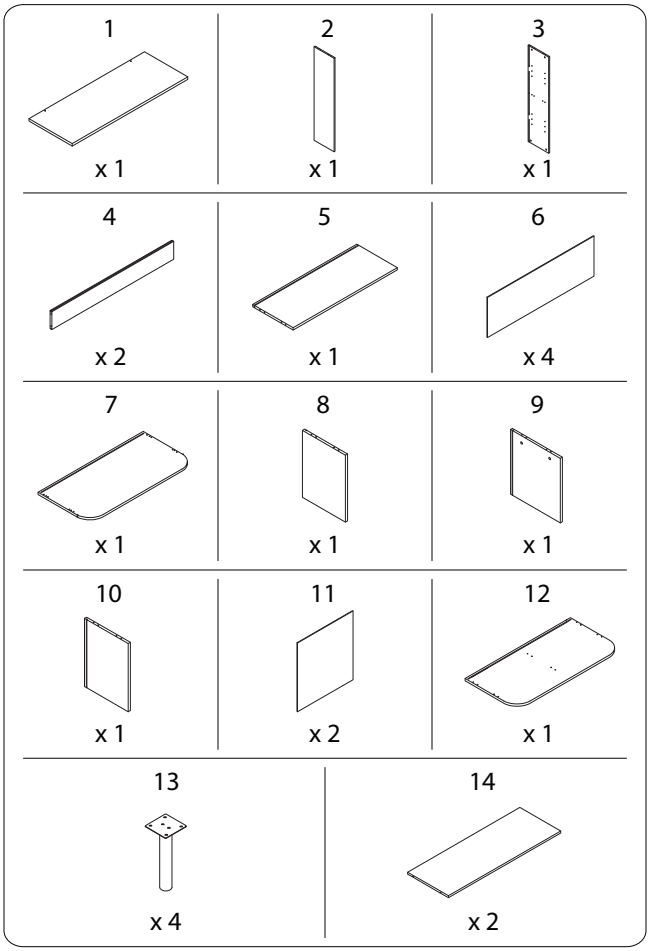
1
x 1
2
x 1
3
x 1
4
x 2
5
x 1
6
x 4
7
x 1
8
x 1
9
x 1
10
x 1
11
x 2
12
x 1
13
x 4
14
x 2

A x 22	B x 22	
C x 24	D M4 x 40 x 12	
E x 8	F M4 x 14 x 18	
G x 4	H x 8	I x 24
J M3 x 14 x 24	K x 2	L x 2

1

1	2	3	7	A
x 1	x 1	x 1	x 1	x 18

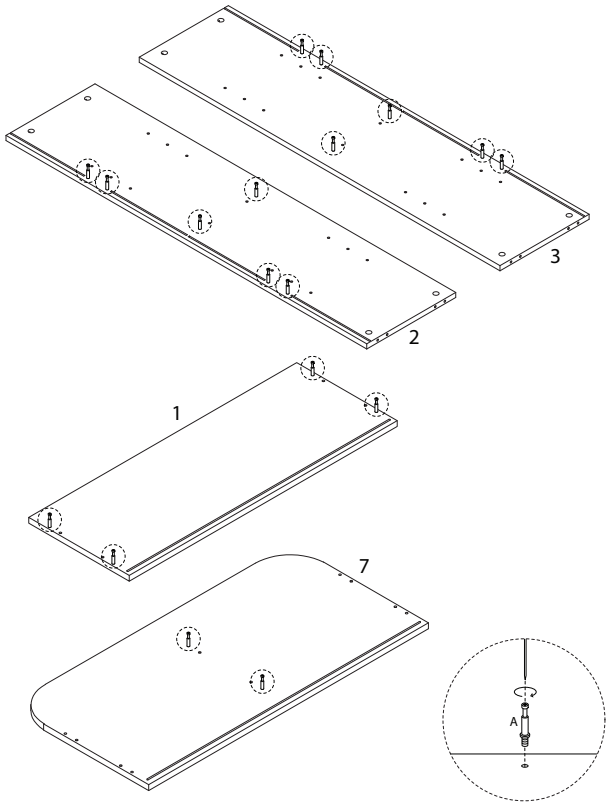

2

5	C
x 1	x 4

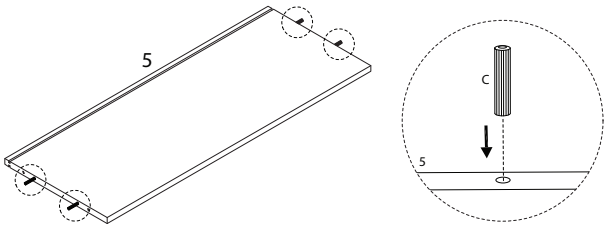

4

6
x 2

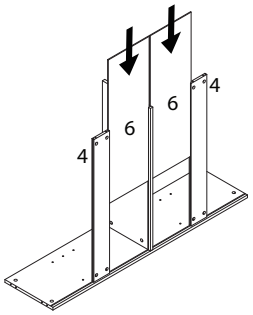

3

4	B
x 2	x 6

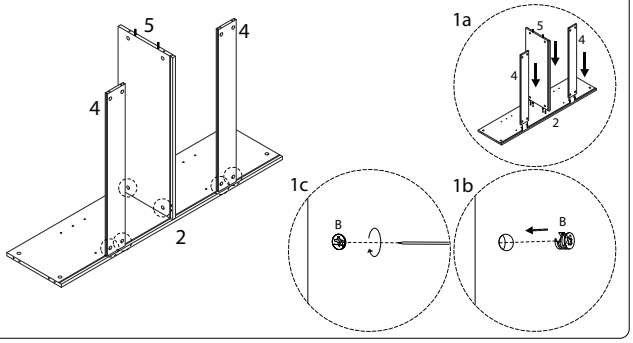

5

B
x 6

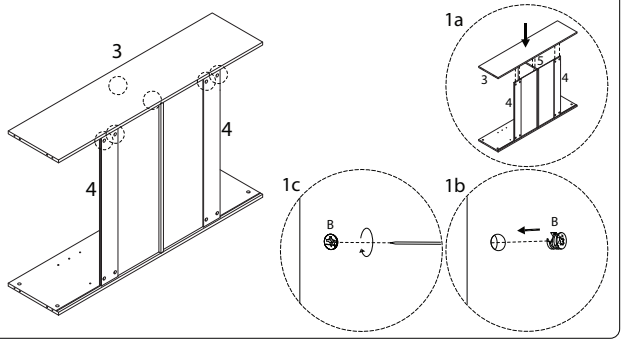

6

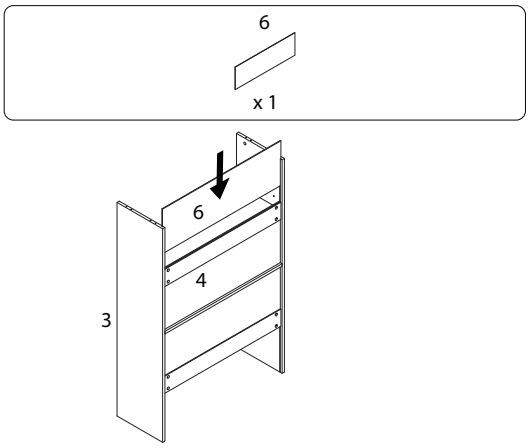

7

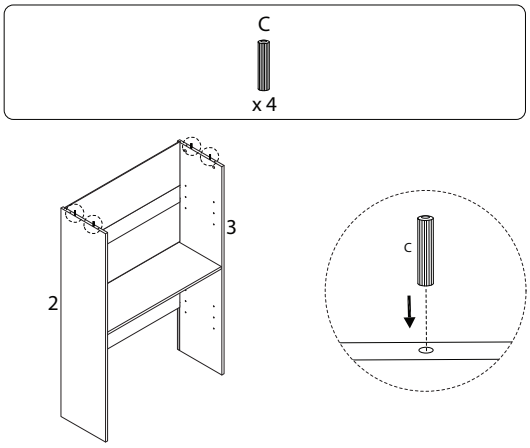

8

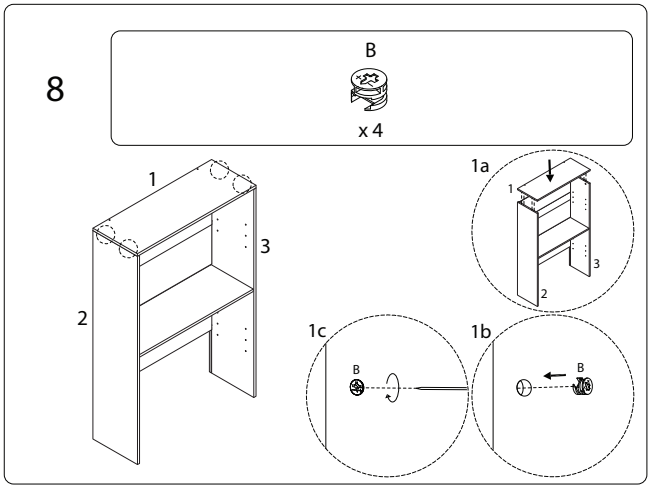

9

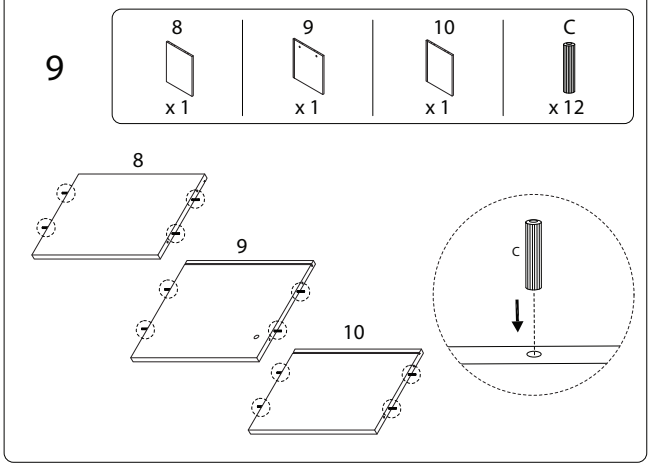

10

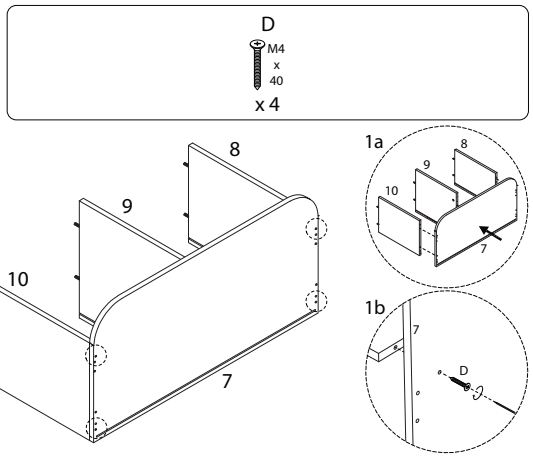

11

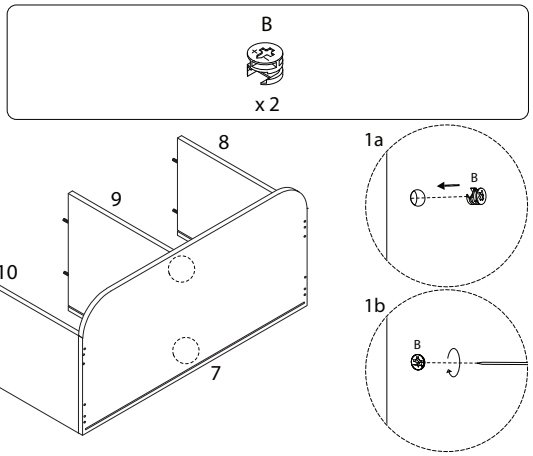

12

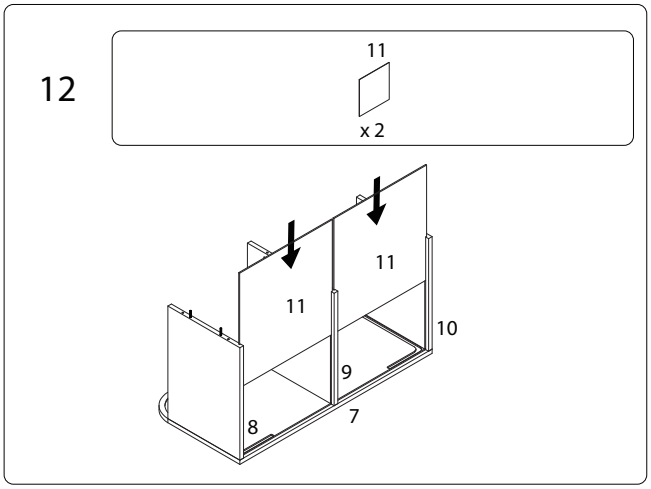

13

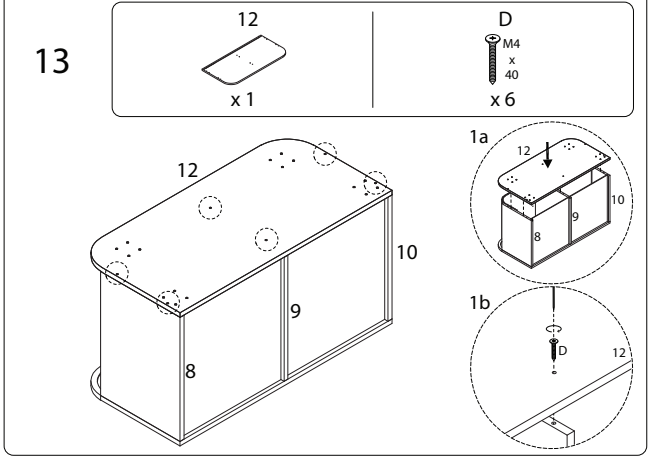

14

13	F	G
x 4	M4 x 14 x 16	x 4

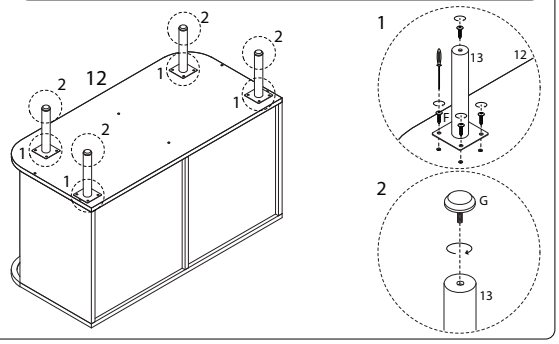

15

A
x 4

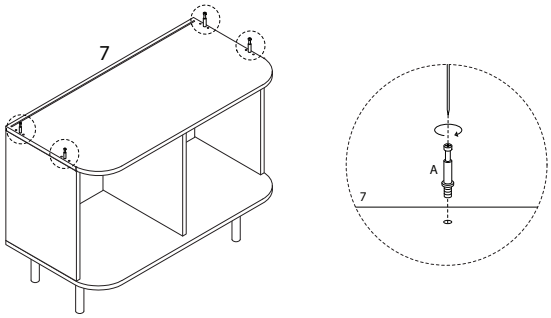

16

6
x 1

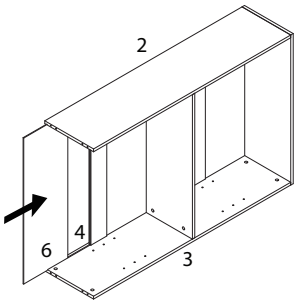

17

C
x 4

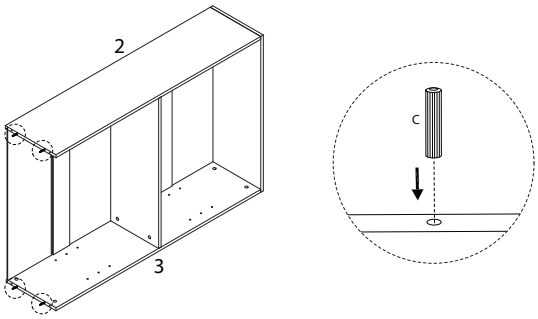

18

B
x 4

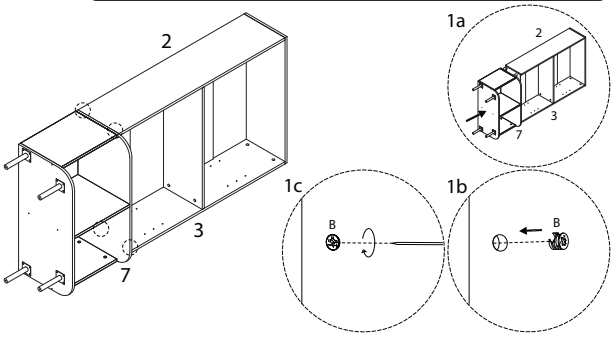

19

14	H
x 2	x 8

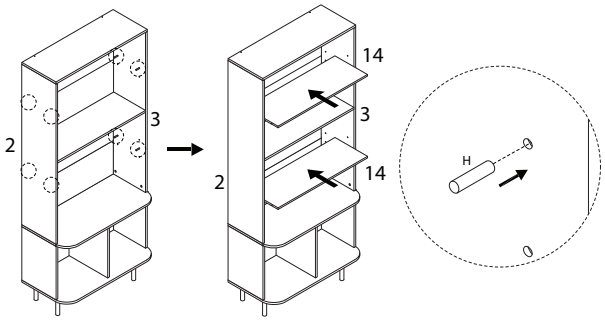

20

E	I	J
x 8	x 24	M3 x 14 x 24

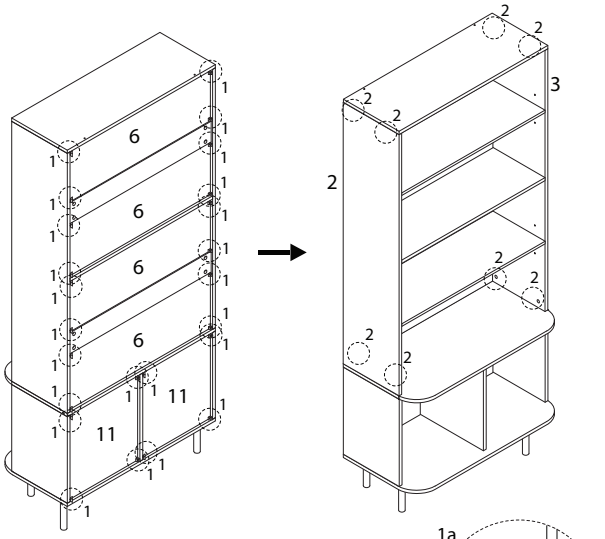

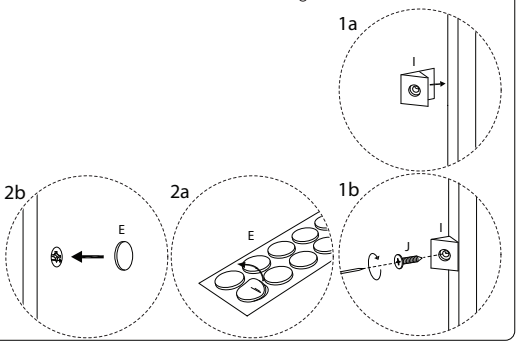

21

D	F	K	L
M4 x 40	M4 x 14		
x 2	x 2	x 2	x 2

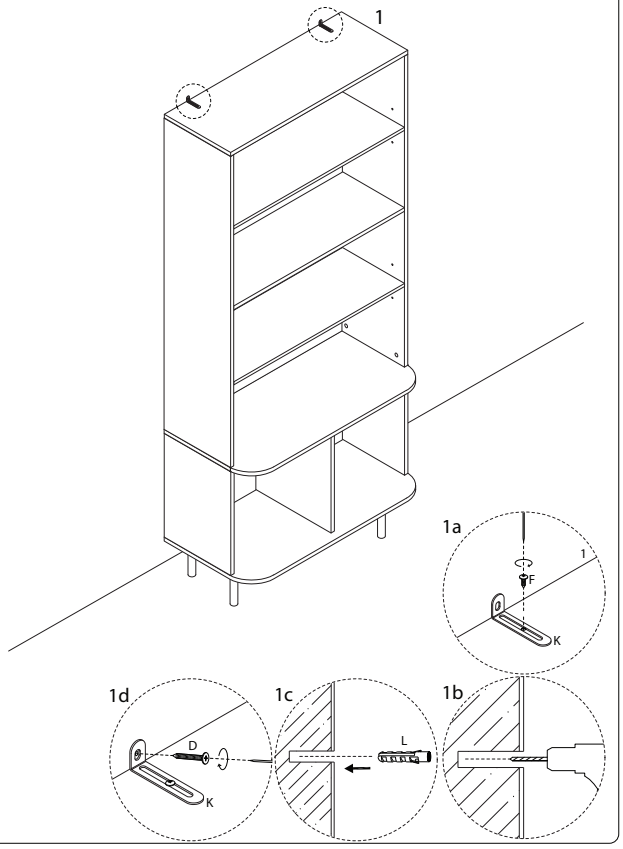

1363/BRADLEY/280526/