ALBIAC

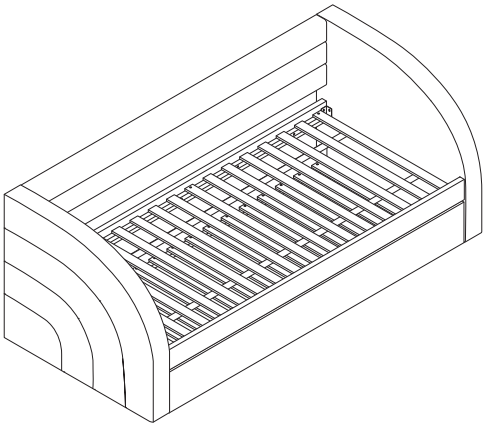

1/10

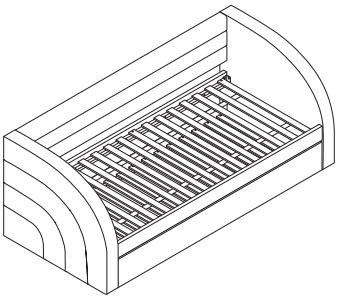

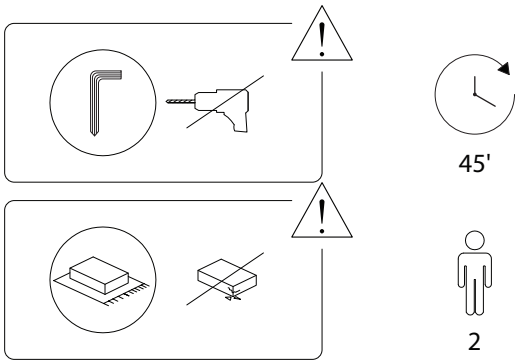

2/10

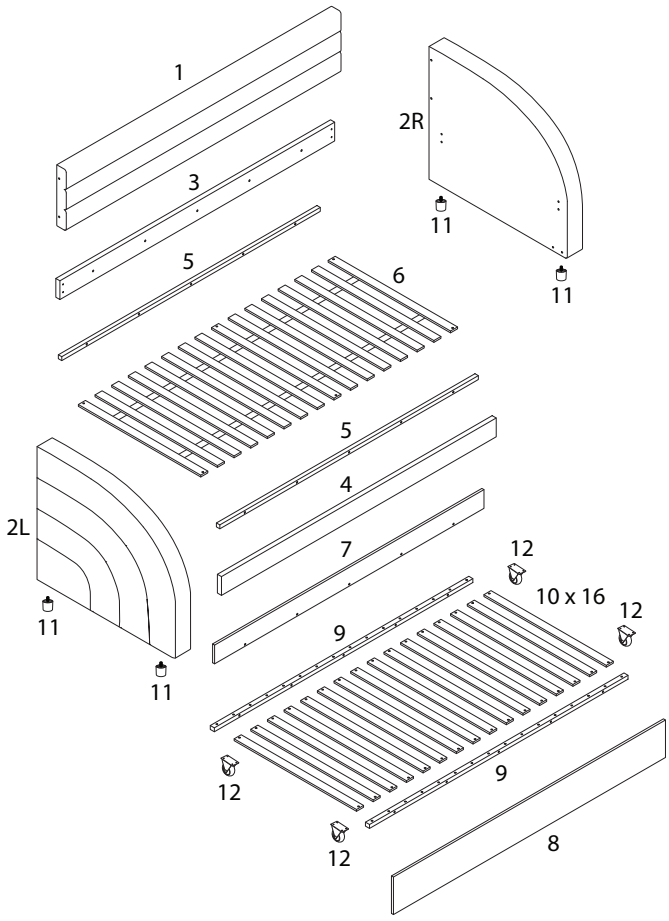

3/10

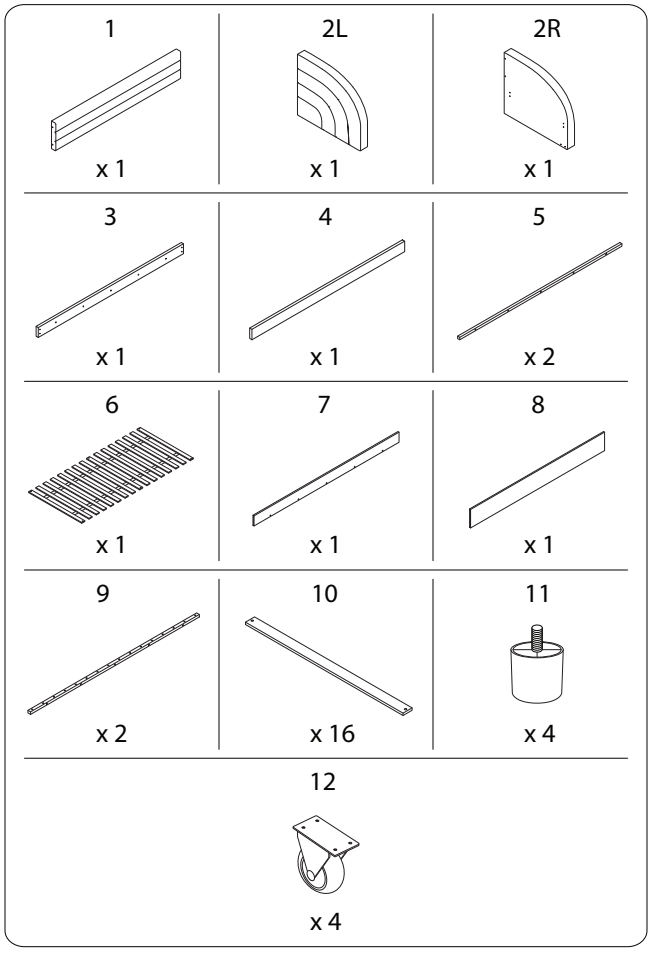

4/10

15S/ALBIAC/070426/

A	B	C
		
x 1	x 52	x 24
D	**E**	**F**
		
x 16	x 6	x 2
G		
		
x 4		

1

2L	2R	11
x 1	x 1	x 4

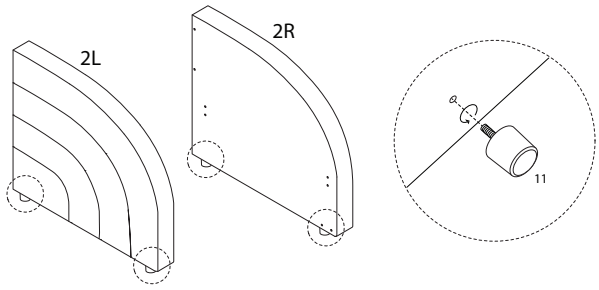

2

1	A	C
x 1	x 1	x 4

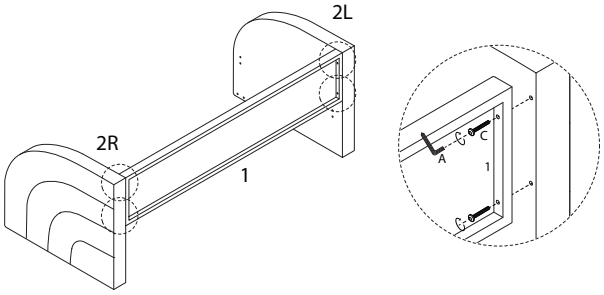

3

3	4	A	B	G
x 1	x 1	x 1	x 16	x 4

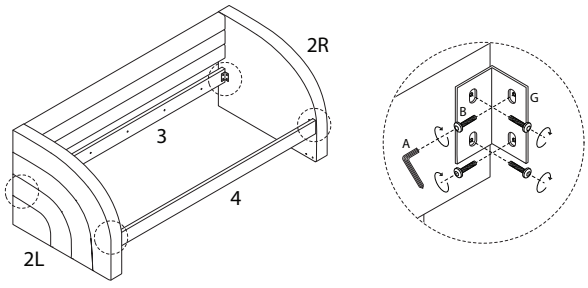

5

6	A	E
x 1	x 1	x 6

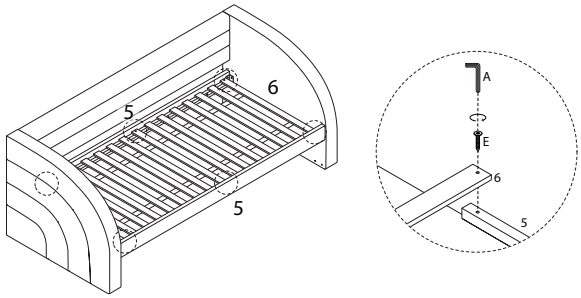

4

5	A	C
x 2	x 1	x 10

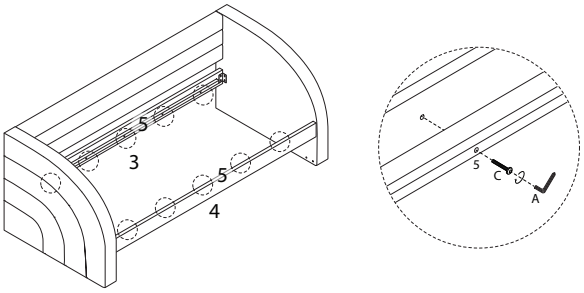

6

A	B	F
x 1	x 4	x 2

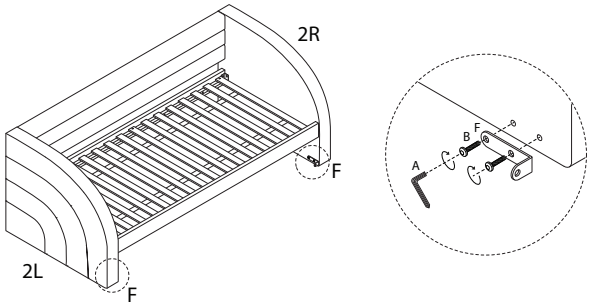

7

7	8	9	A	C
x 1	x 1	x 2	x 1	M8 x 40 x 10

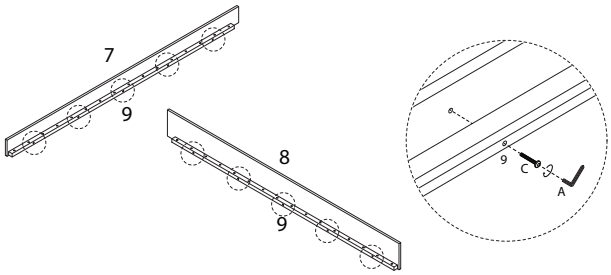

8

10	A	B
x 16	x 1	M8 x 25 x 32

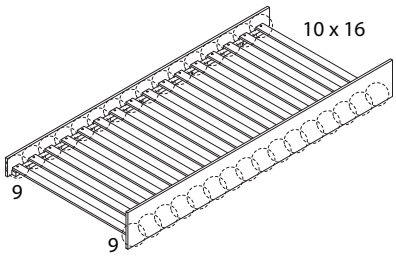

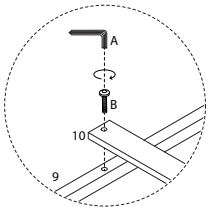

155/ALBIAC/070426/

9

12	A	D
x 4	x 1	M4 x 12 x 16

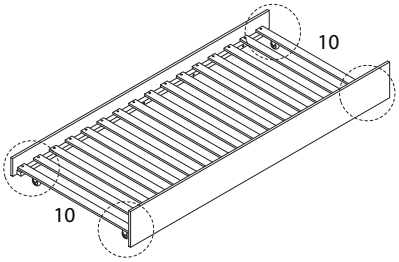

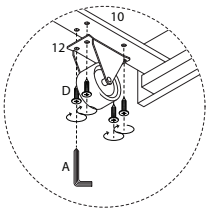

10

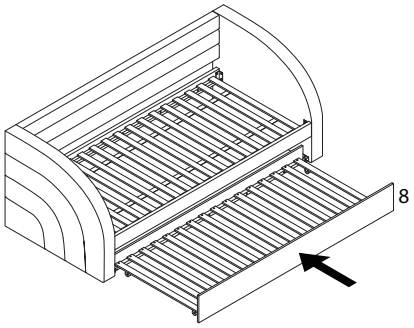

155/ALBIAC/070426/