

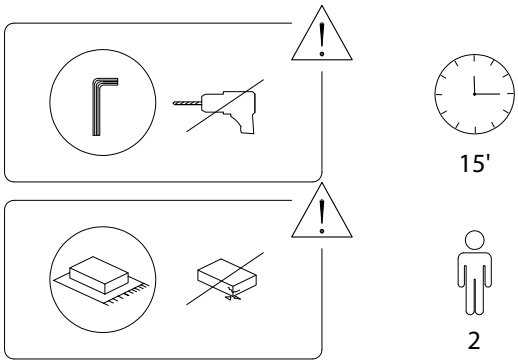
15'
2





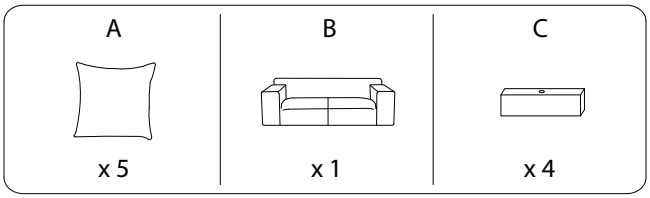
A
x 5
B
x 1
C
x 4

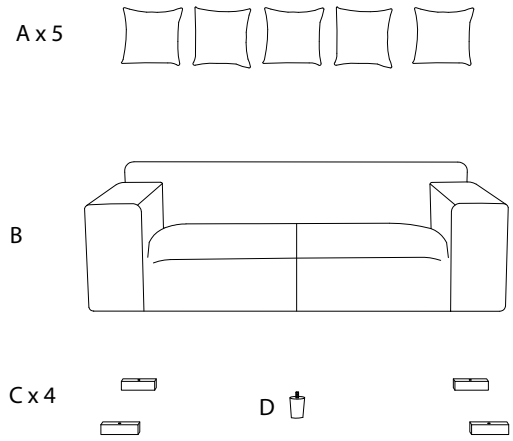
A x 5
B
C x 4
D

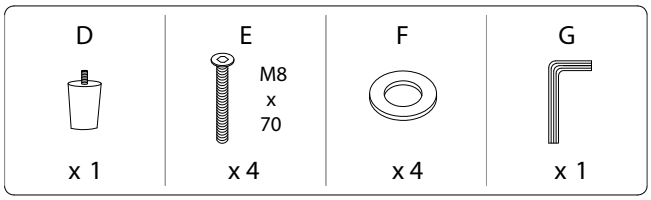
D
x 1
E
M8
x
70
x 4
F
x 4
G
x 1





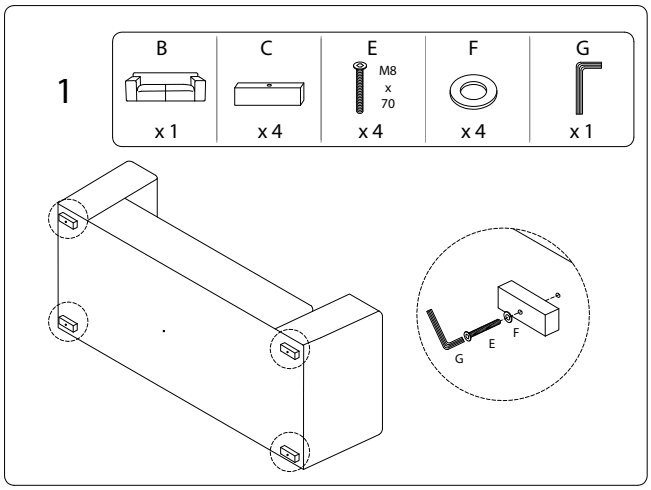
1
B
x 1
C
x 4
E
M8
x
70
x 4
F
x 4
G
x 1
G
E
F

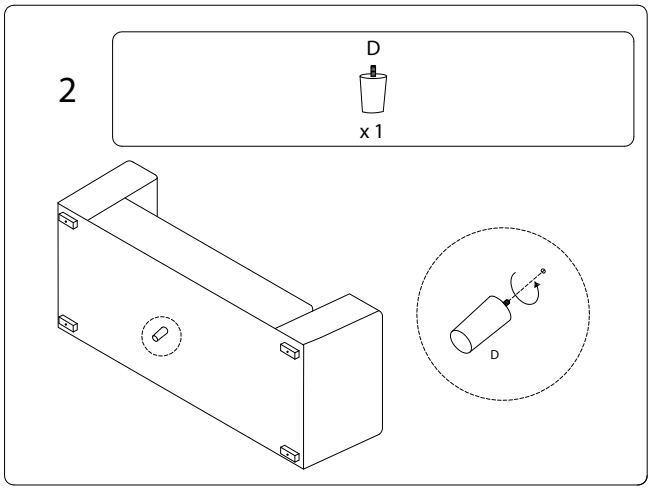
2
D
x 1
D





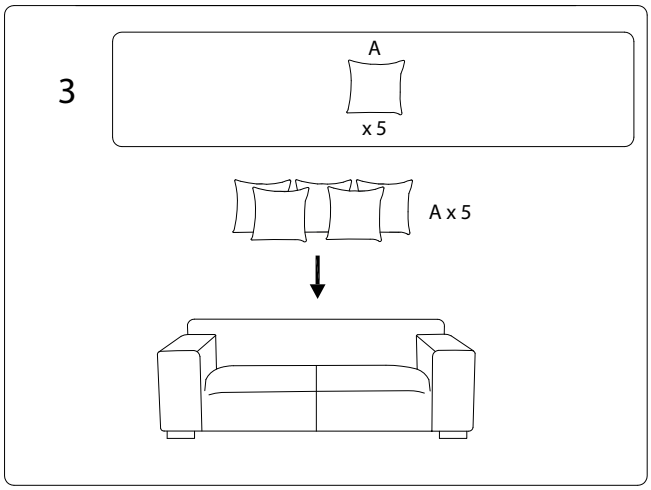
3
A
x 5
A x 5