NIVO

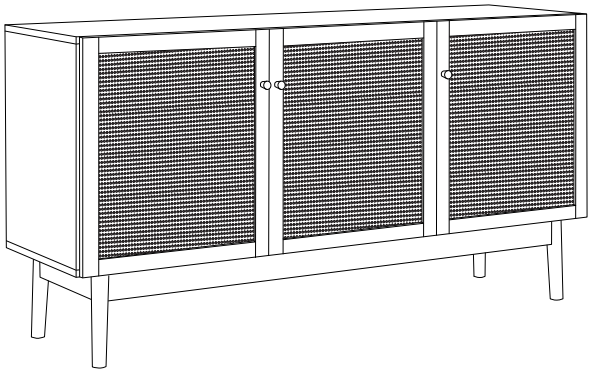

1/18

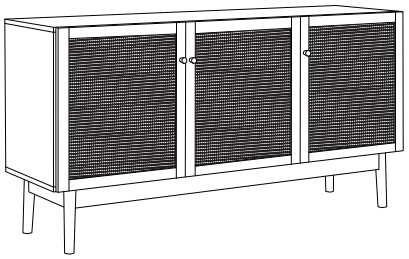

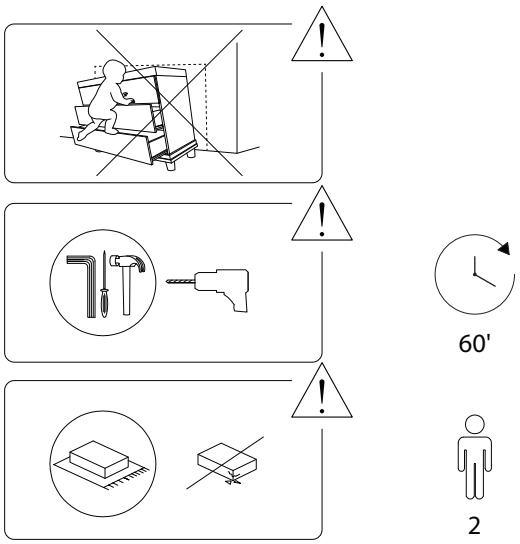

2/18

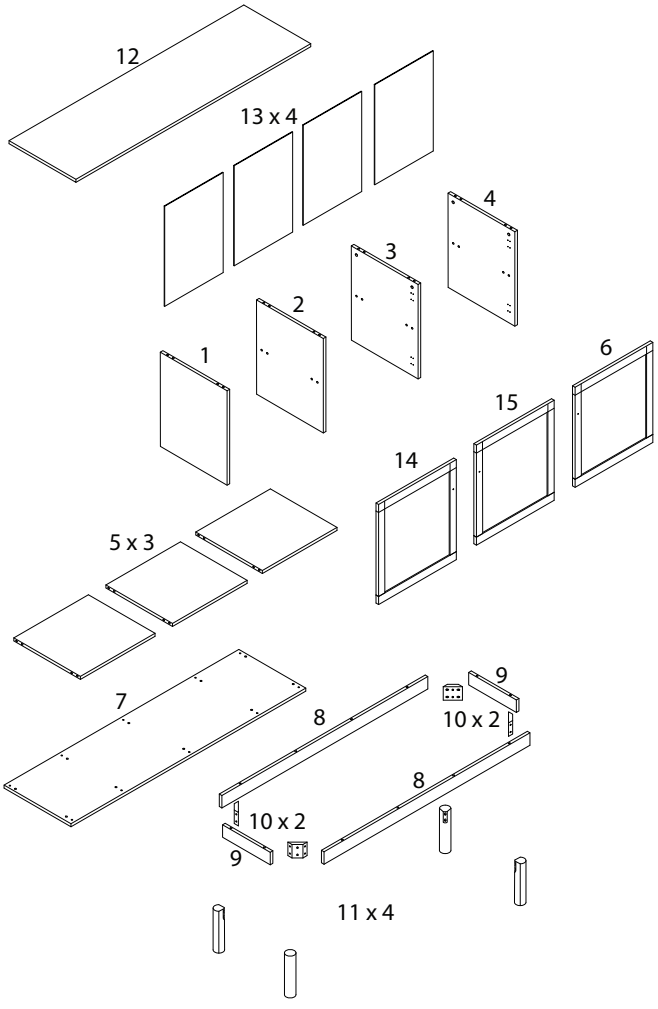

3/18

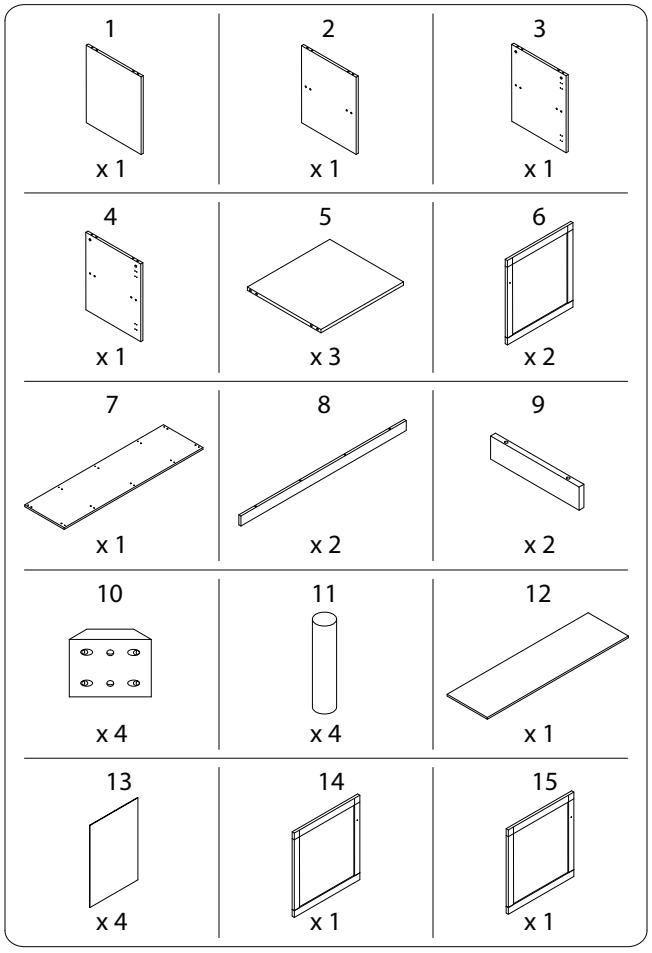

4/18

A	B	C	D	E
				
x 20	x 20	x 20	x 8	x 16
F	G	H	I	J
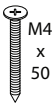				
x 12	x 8	x 1	x 28	x 3
K	L	M	N	O
				
x 6	x 36	x 3	x 3	x 2
P	Q	R	S	T
				
x 2	x 2	x 2	x 2	x 4

O	V	W
		
x 4	x 2	x 3

1

1	4	A	B
x 1	x 1	x 4	x 4

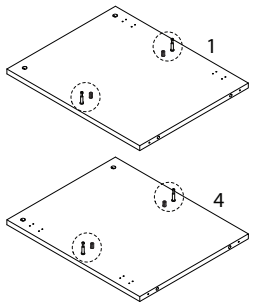

2

2	3	A	T
x 1	x 1	x 4	x 4

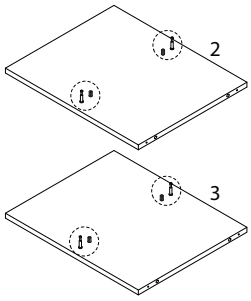

3

5
x 2

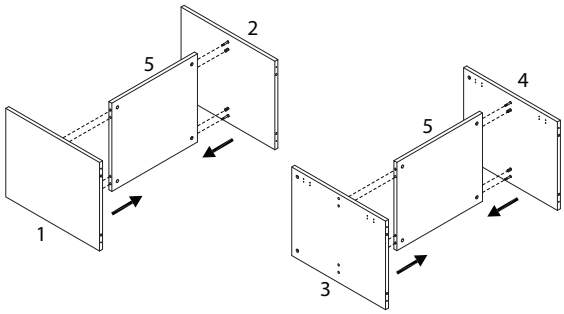

5

A
x 4

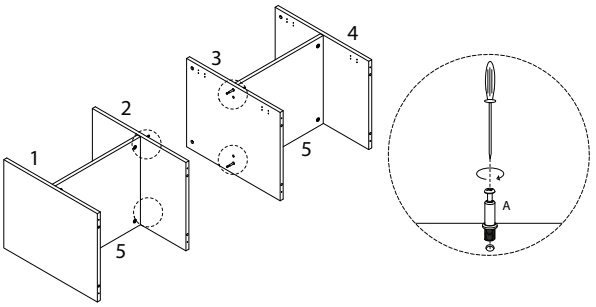

4

C
x 8

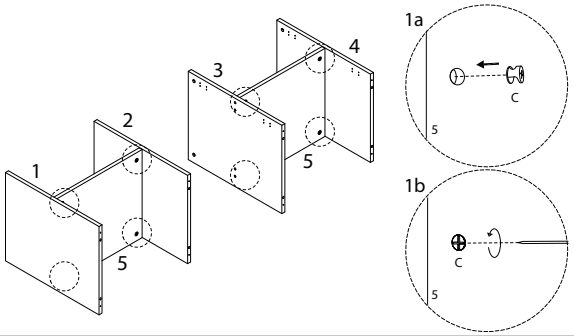

6

5
x 1

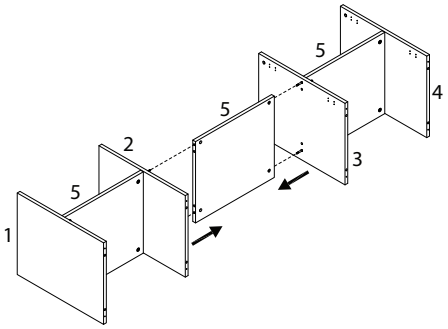

7

C

x 4

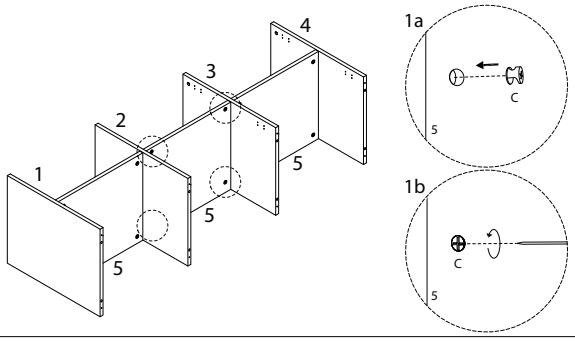

8

B

x 8

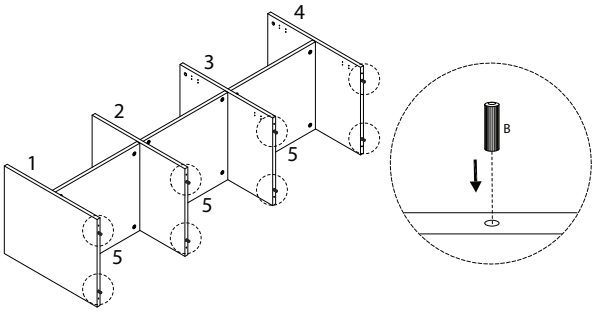

9

7

x 1

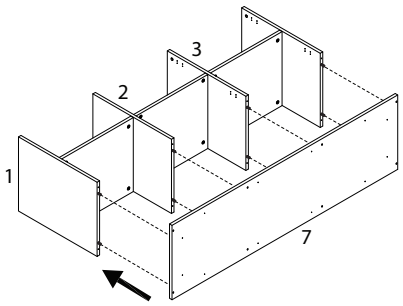

10

D

M4 x 40

x 8

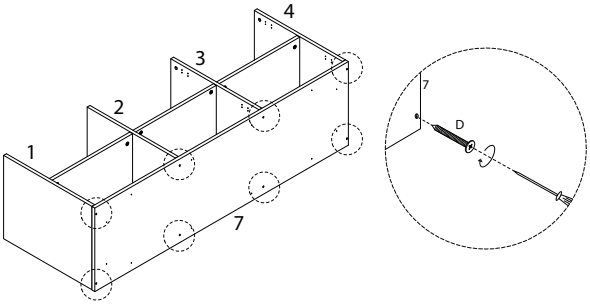

11

8

x 2

9

x 2

10

x 4

E

M4 x 25

x 16

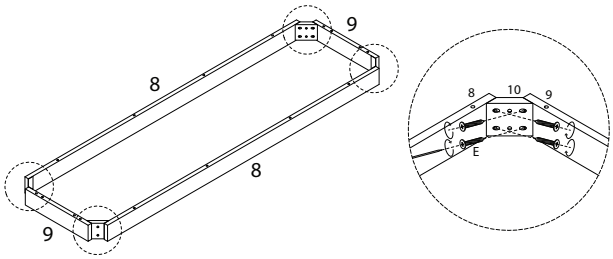

13

11

x 4

G

M6 x 45

x 8

H

x 1

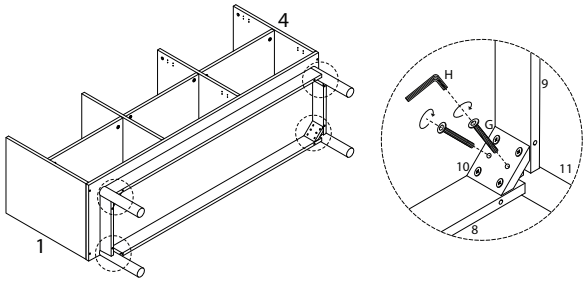

12

F

M4 x 50

x 12

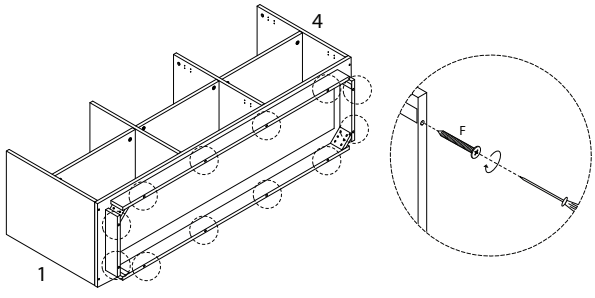

14

U

x 4

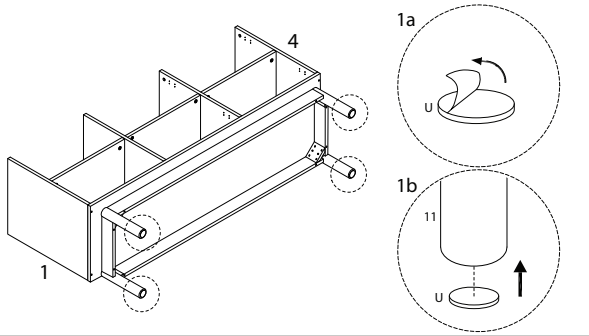

15

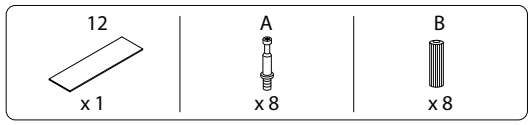

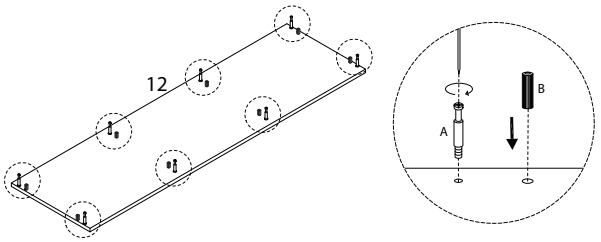

16

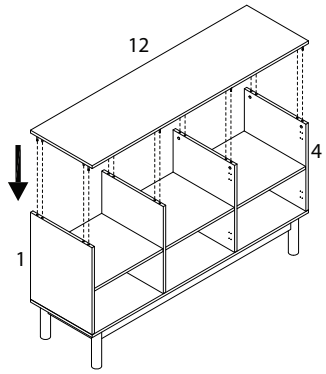

17

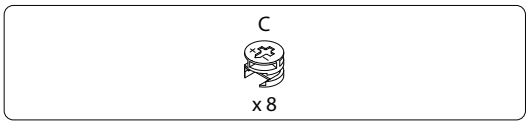

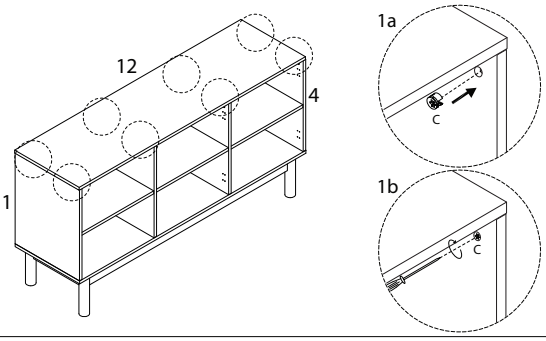

18

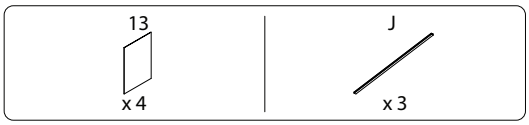

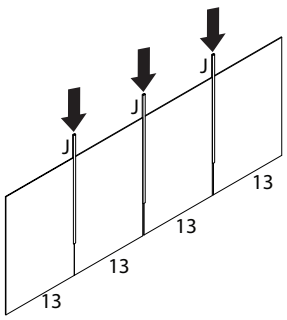

19

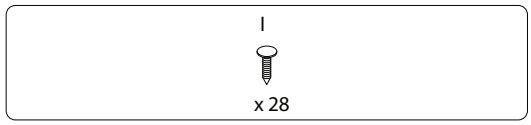

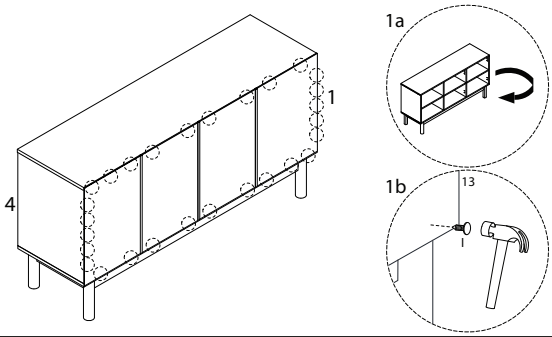

21

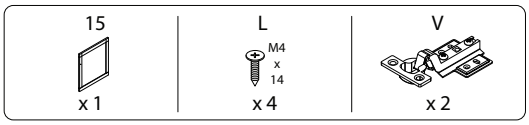

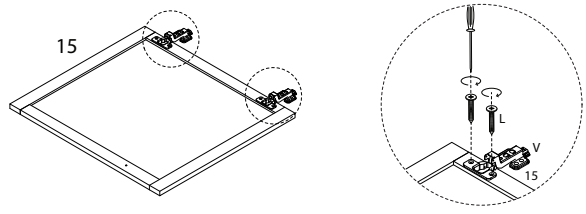

20

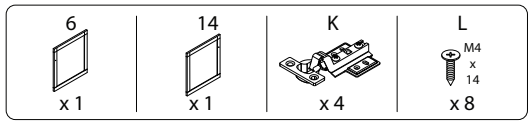

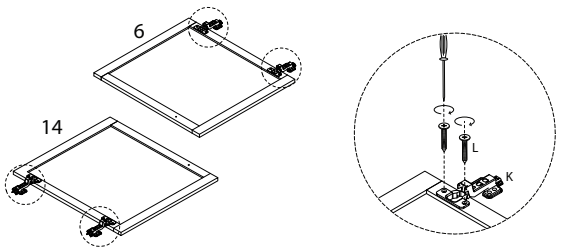

22

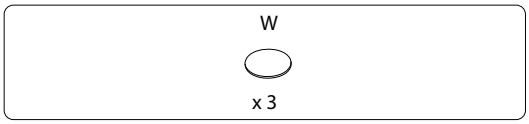

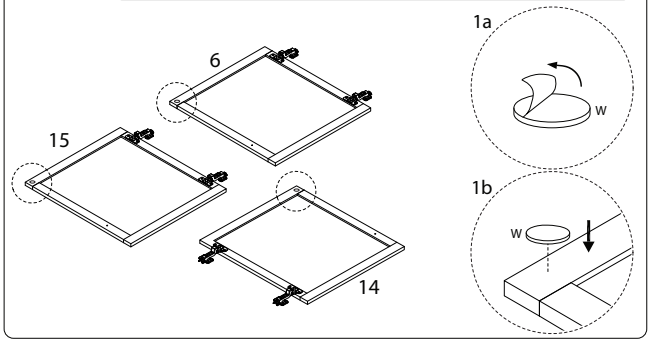

23

M	N
x 3	M4 x 14 x 3

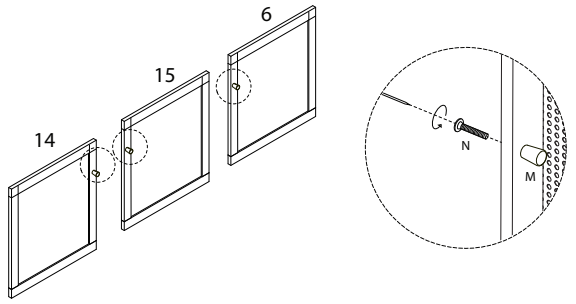

24

L
M4 x 14 x 24

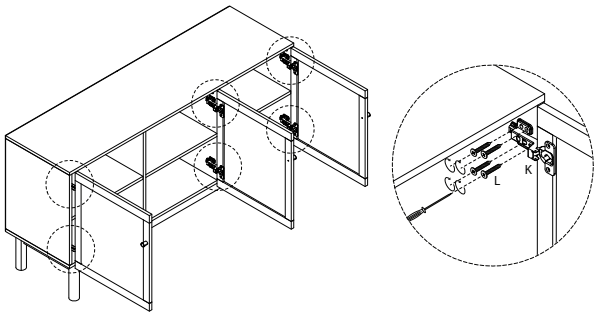

25

O	P	Q	R	S
M4 x 12 x 2	x 2	x 2	M4 x 35 x 2	x 2

