COVENTRY

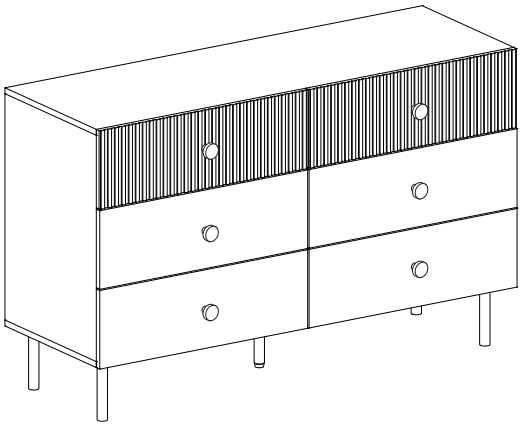

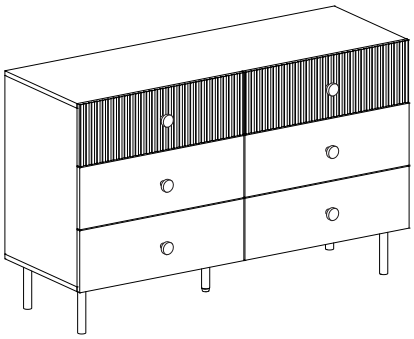

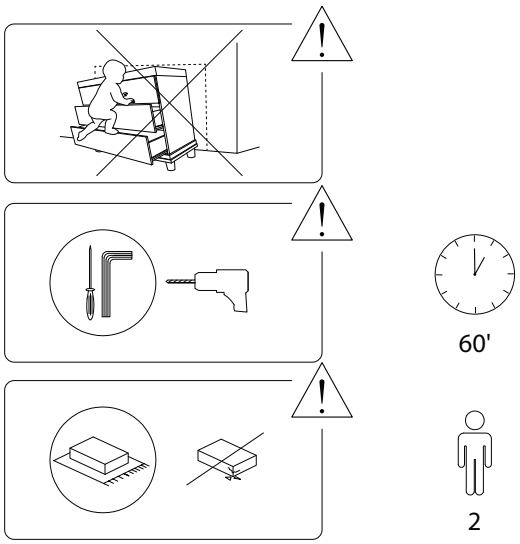
60'
2

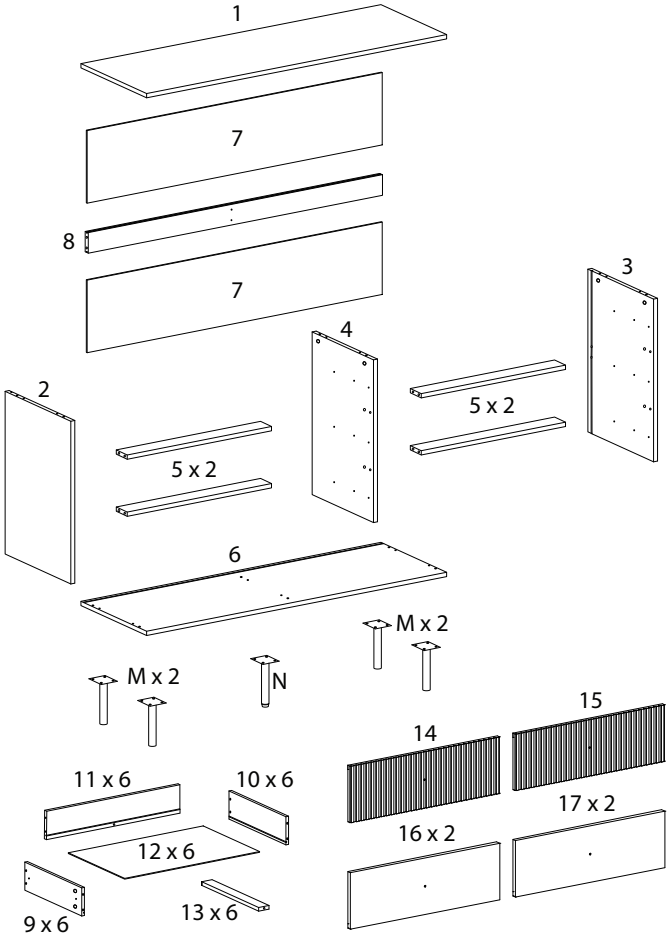
1
7
8
7
3
4
2
5 x 2
5 x 2
6
M x 2
M x 2
N
15
14
11 x 6
10 x 6
17 x 2
16 x 2
12 x 6
9 x 6
13 x 6

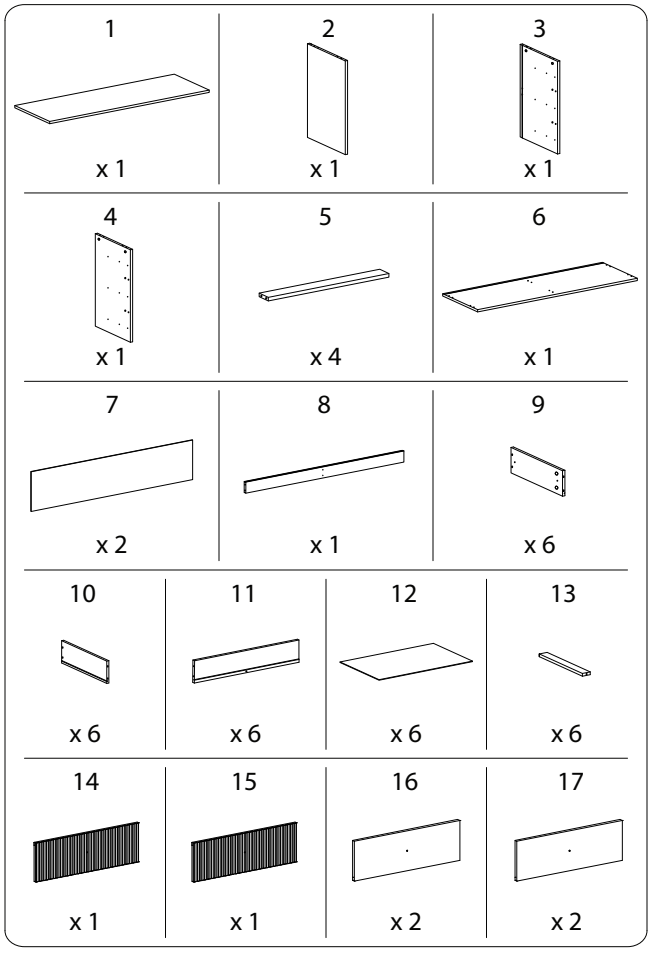
1
x 1
2
x 1
3
x 1
4
x 1
5
x 4
6
x 1
7
x 2
8
x 1
9
x 6
10
x 6
11
x 6
12
x 6
13
x 6
14
x 1
15
x 1
16
x 2
17
x 2

A	B	C	D
x 48	x 48	M6 x 30 x 16	M3 x 12 x 60
E	**F**	**G**	**H**
M4 x 35 x 38	M6 x 50 x 2	M6 x 12 x 16	x 1
I_1	**I_2**	**J_1**	**J_2**
x 6	M4 x 20 x 6	M4 x 12 x 2	x 2
J_3	**J_4**	**J_5**	**K**	**L_1**
x 4	M4 x 35 x 2	x 2	M4 x 10 x 4	x 8
L_2	**M**	**N**	**O**	**P**
M3 x 16 x 8	x 4	x 1	x 12	x 12

!

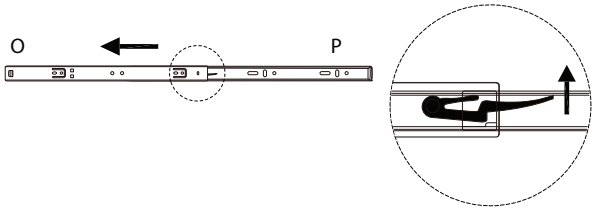

1

2	3	D	O
x 1	x 1	M3 x 12 x 18	x 6

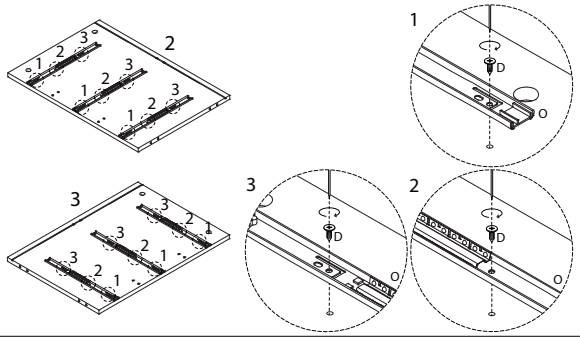

2

A
x 8

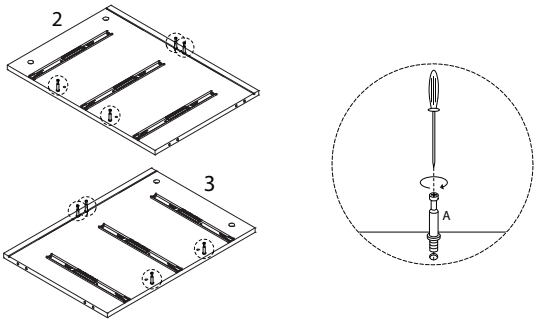

4

A
x 4

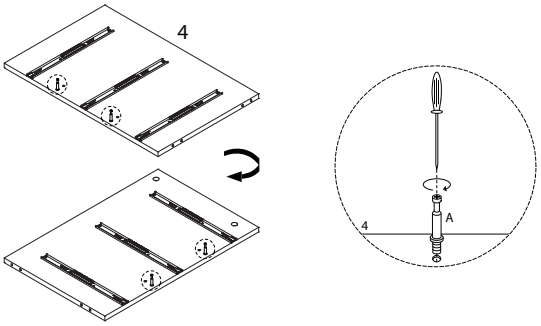

3

4	D	O
x 1	M3 x 12 x 18	x 6

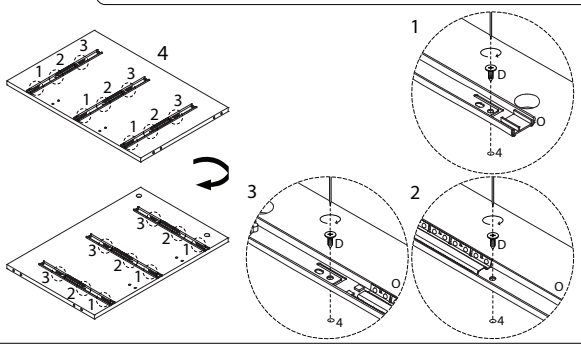

5

8	E
x 1	M4 x 35 x 2

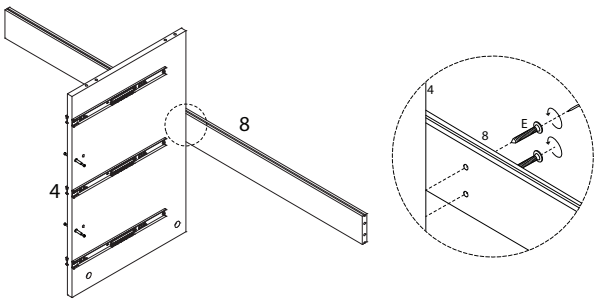

6

F
M6 x 50
x 2

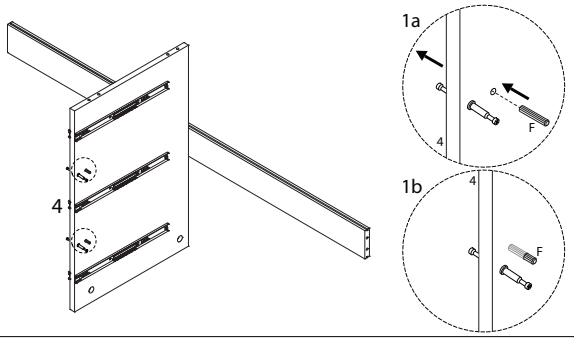

7 x 2

5
x 2

C
M6 x 30
x 2

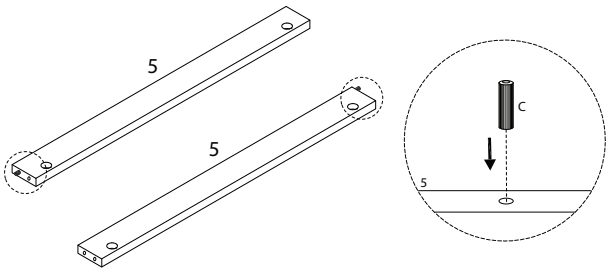

8

B
x 6

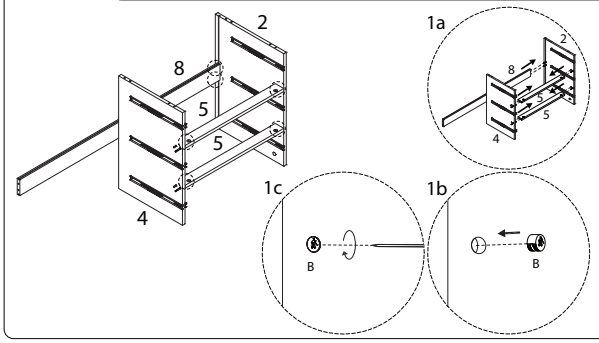

9

B
x 6

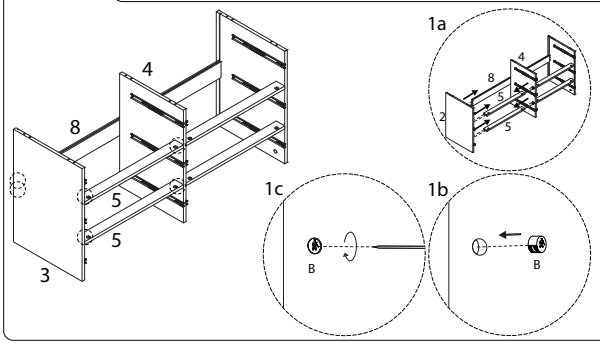

10

7
x 1

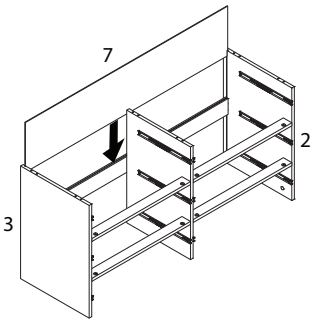

11

C
M6 x 30
x 6

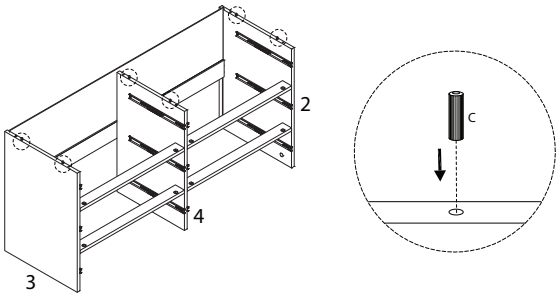

12

6
x 1

E
M4 x 35
x 6

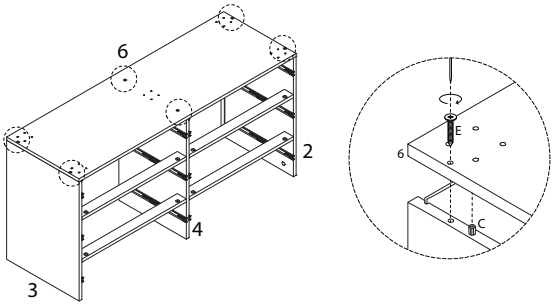

13

M	N	G	H	K
x 4	x 1	M6 x 12 x 16	x 1	M4 x 10 x 4

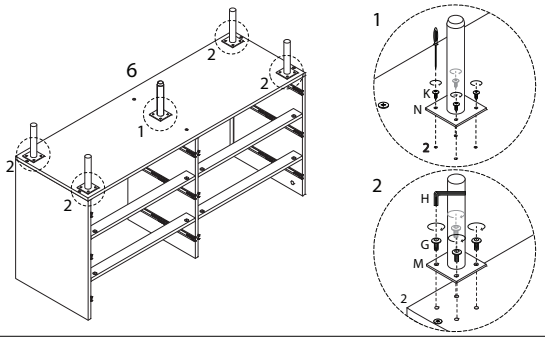

14

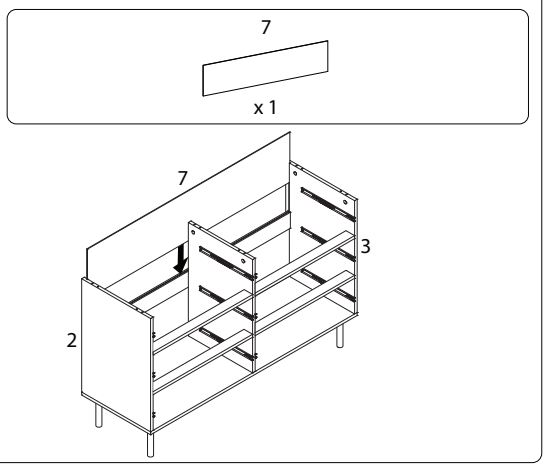

15

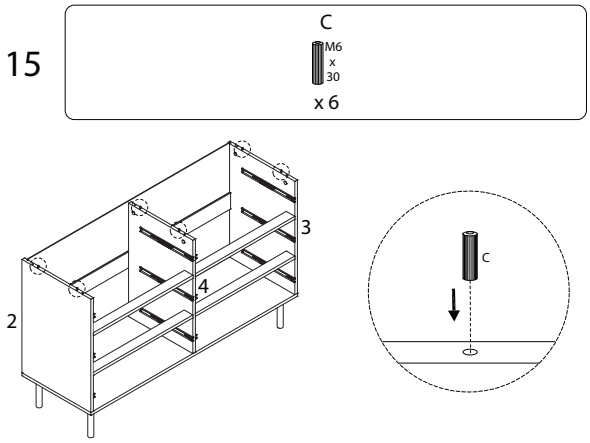

16

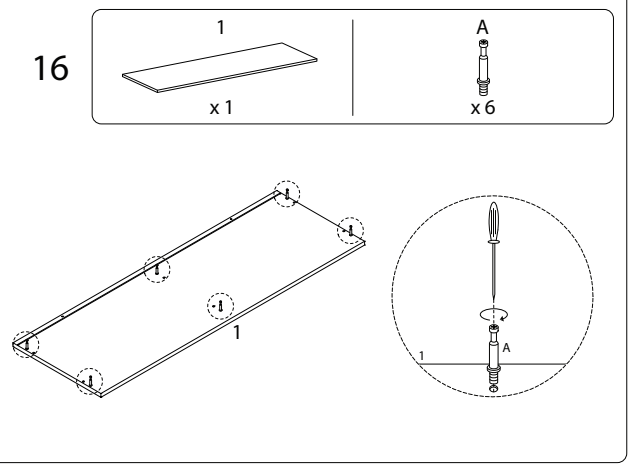

17

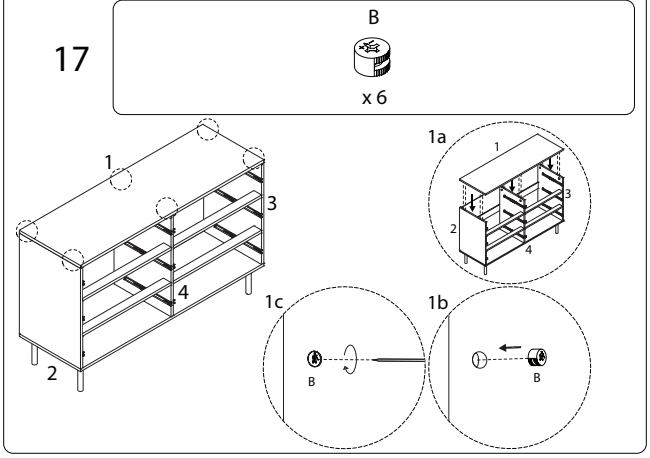

18 x 6

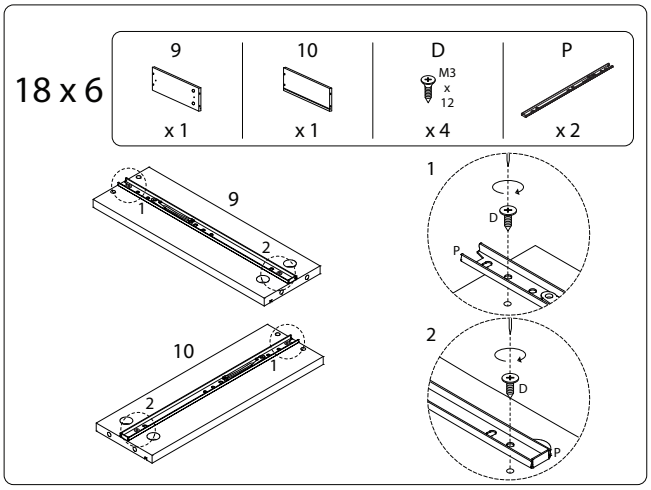

19

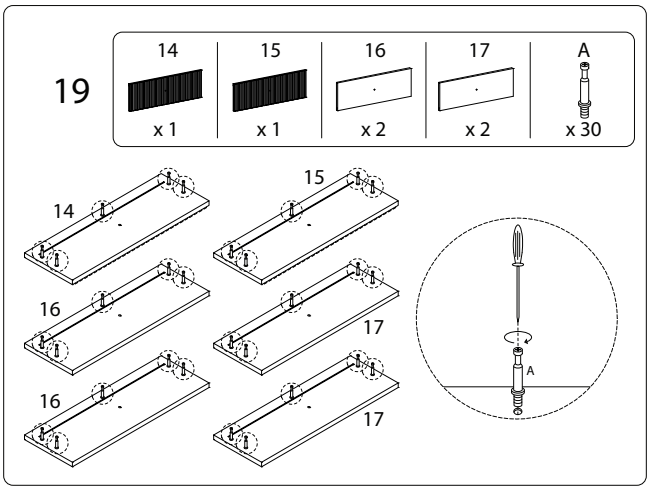

20

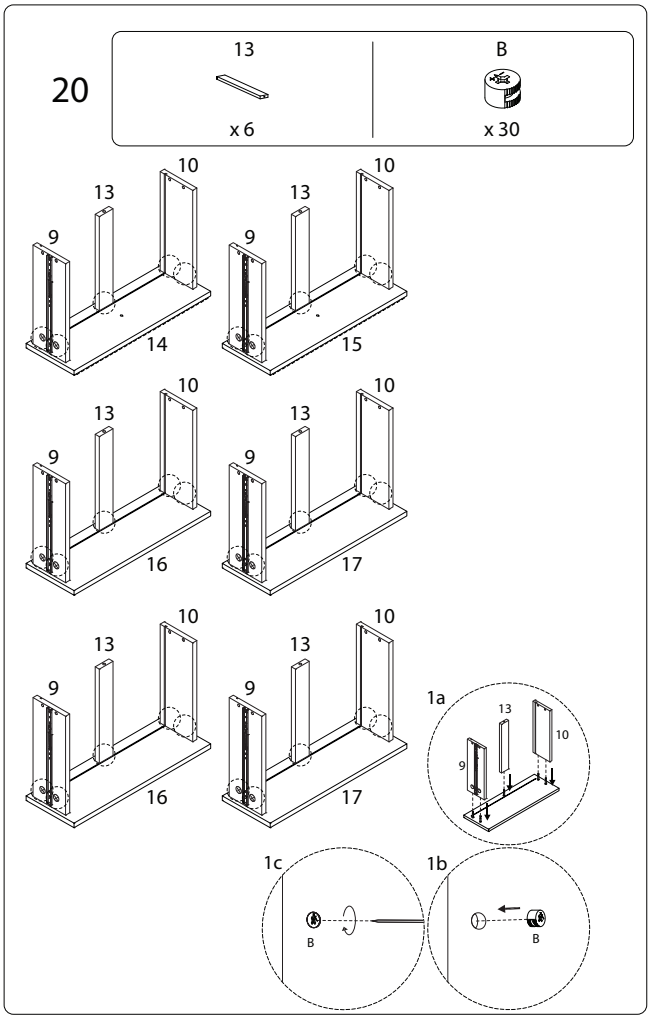

21 x 6

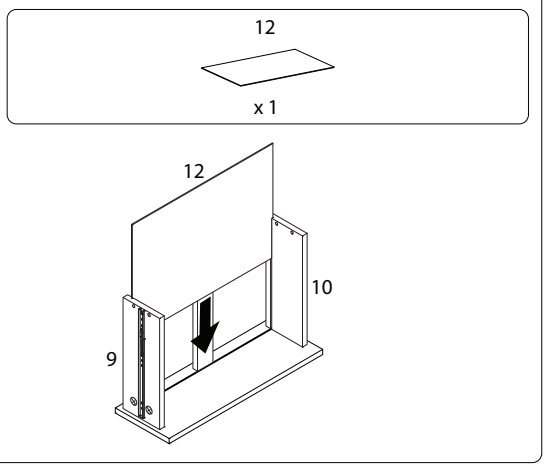

22 x 6

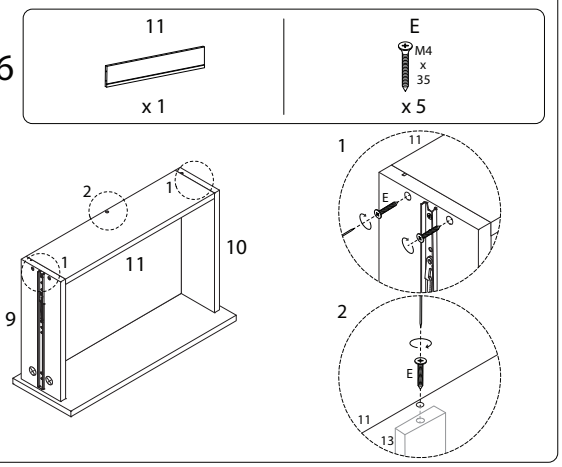

23

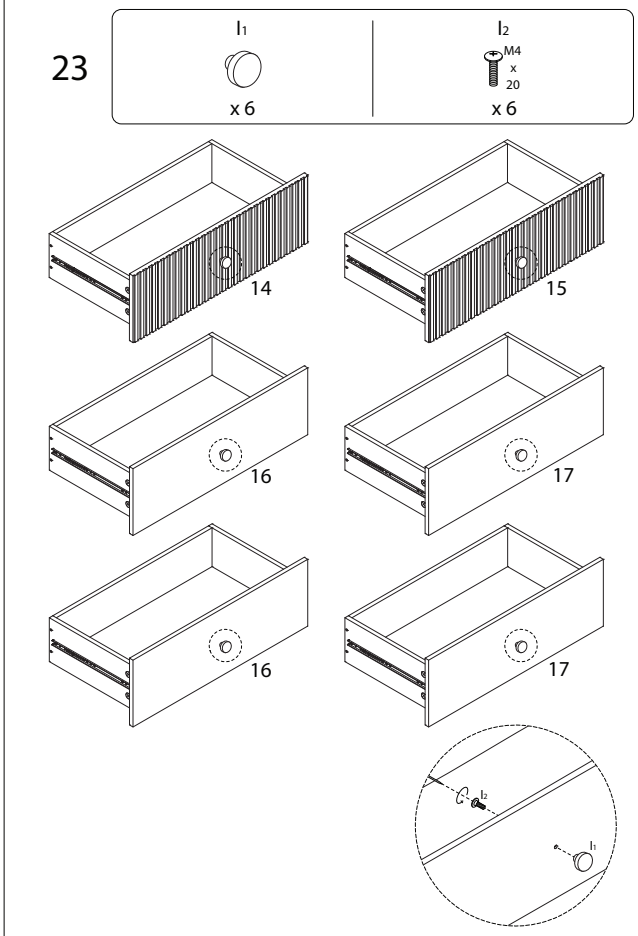

24

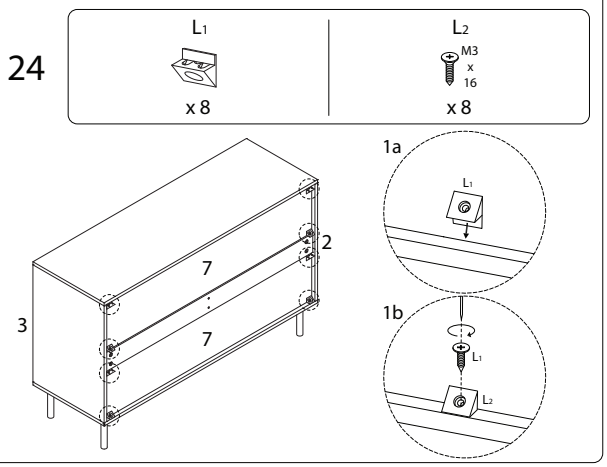

25

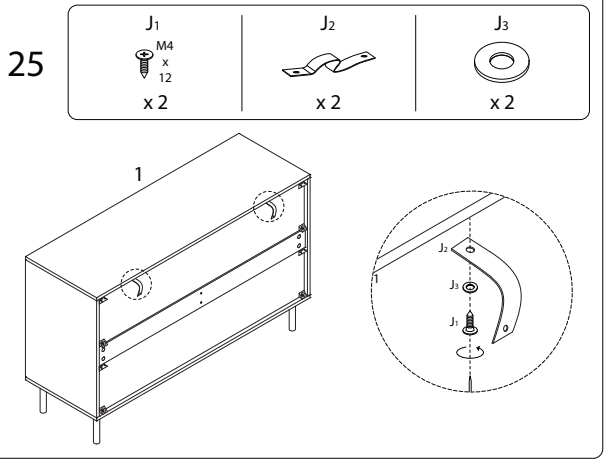

26

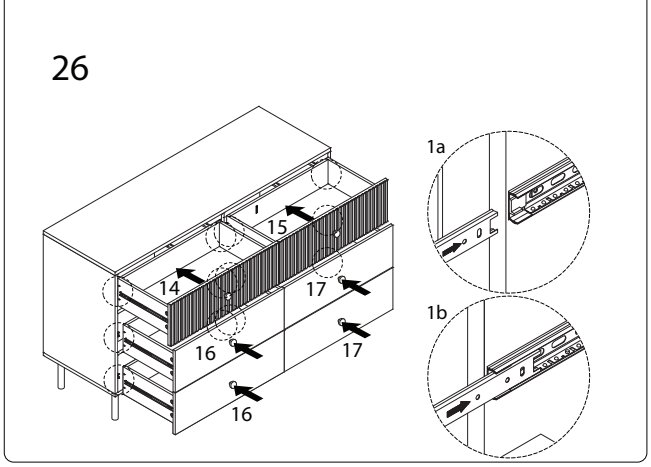

27

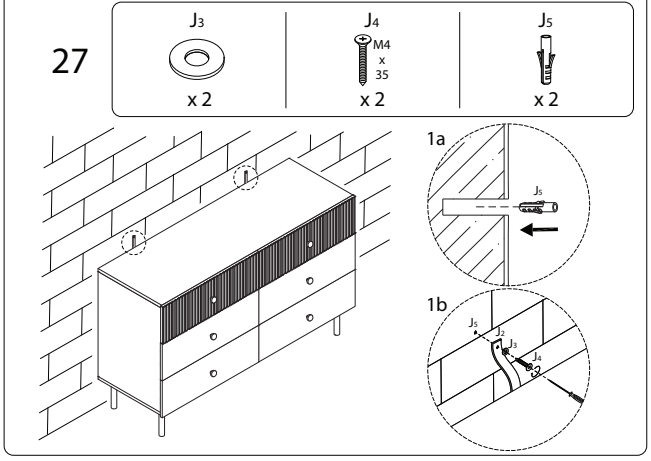

28

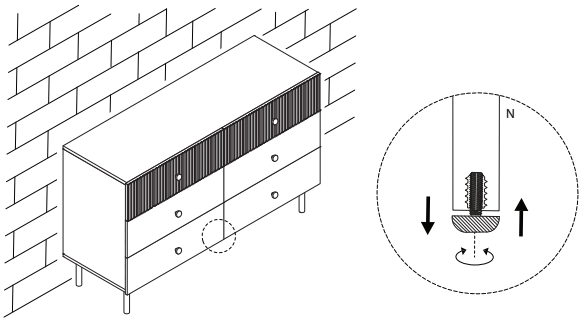

680/COVENTRY/081024/