AFOSS

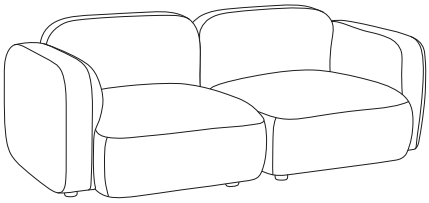

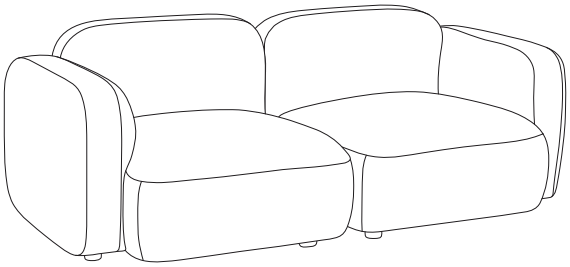

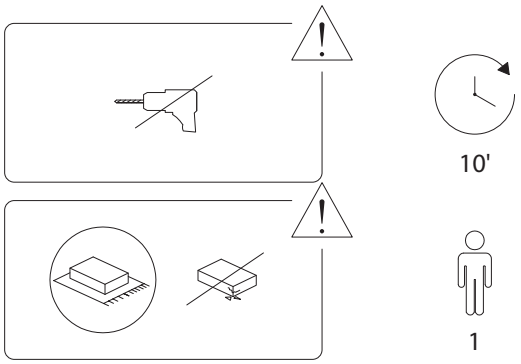

1/4

2357/AFOSS/121125/

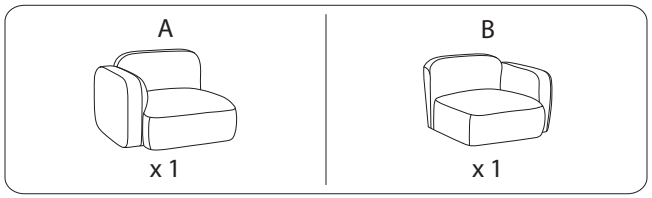

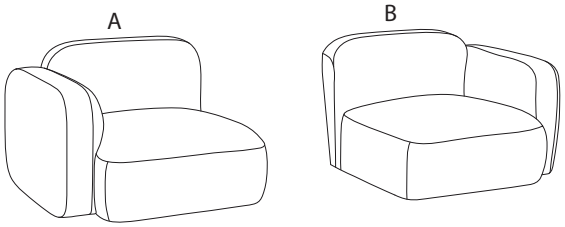



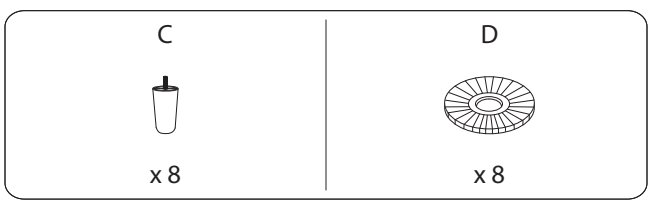

2/4

2357/AFOSS/121125/

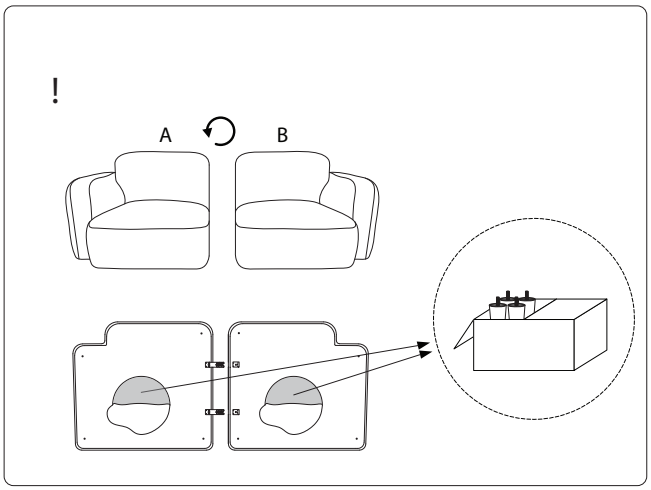

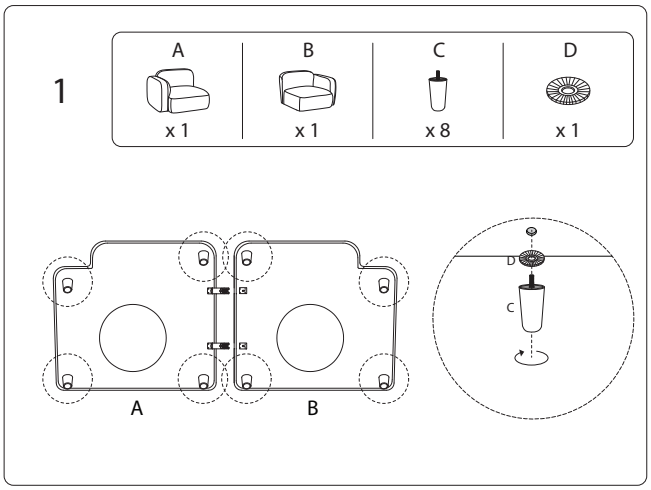

3/4

2357/AFOSS/121125/

2

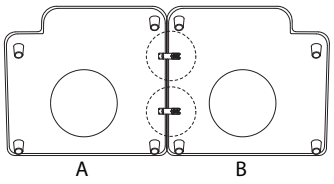

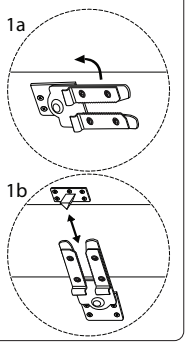

2357/AFOSS/121125/