GIULIA

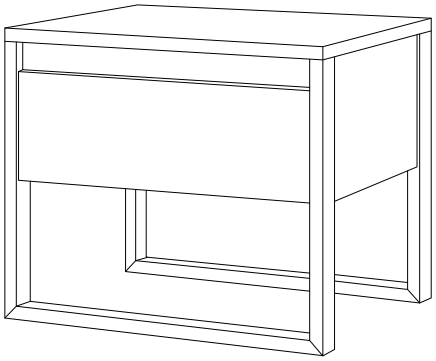

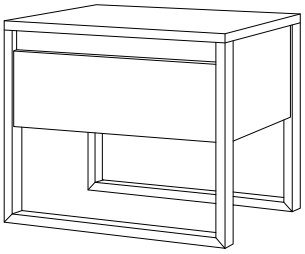

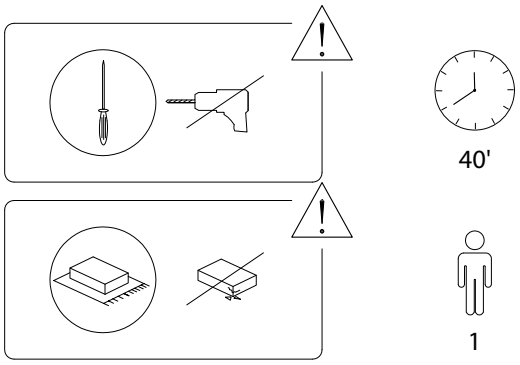

992/GIULIA/270126/

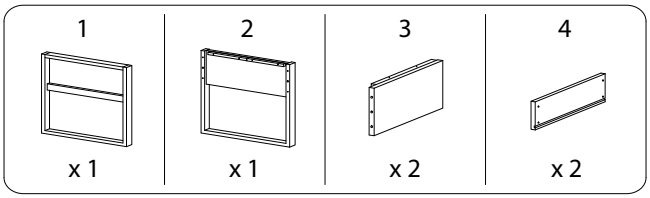

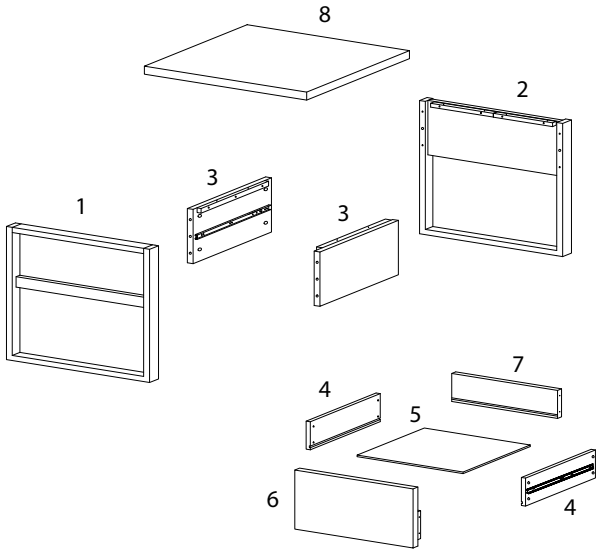

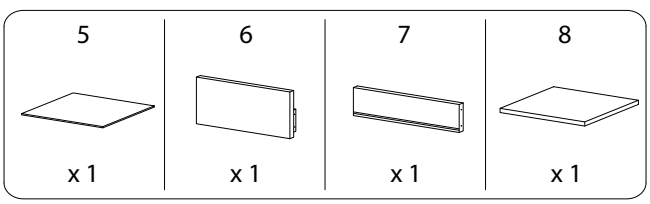

992/GIULIA/270126/

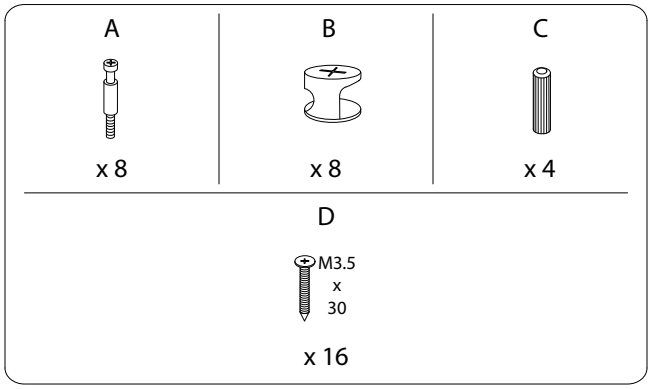

992/GIULIA/270126/

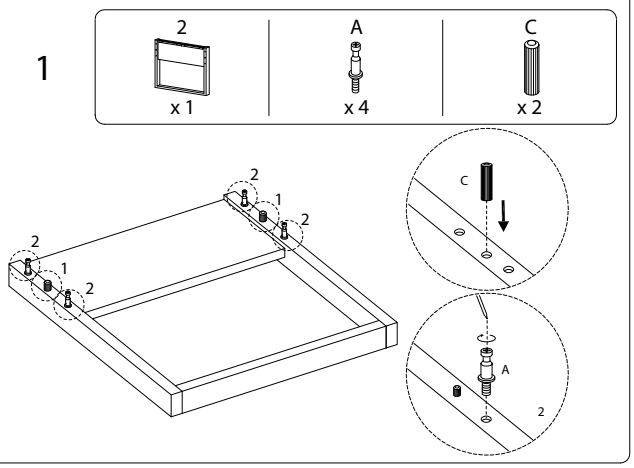
1
2
x 1
A
x 4
C
x 2
2
1
2
2
1
2
C
A
2

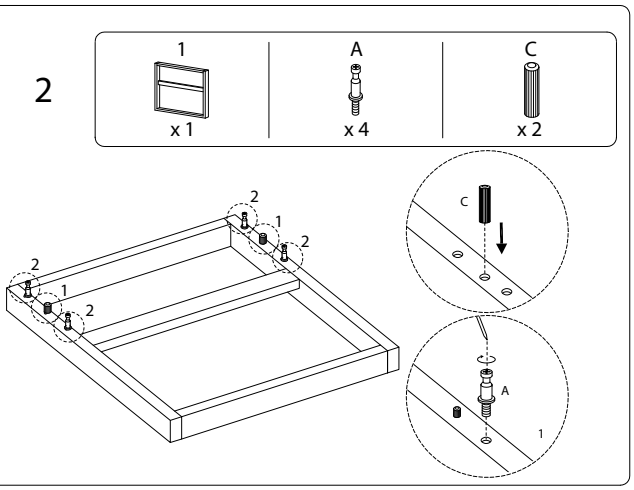
2
1
x 1
A
x 4
C
x 2
2
1
2
2
1
2
C
A
1

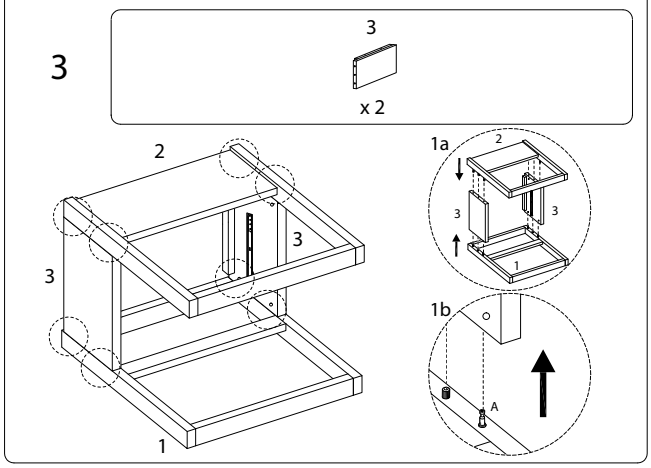
3
3
x 2
2
3
3
1
1a
2
3
3
1
1b
A

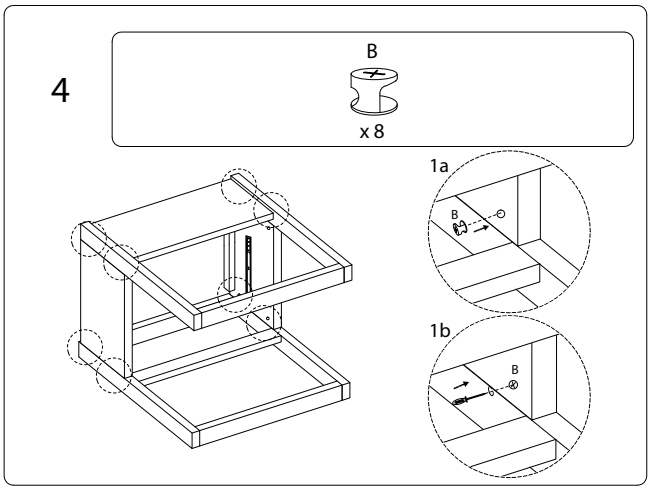
4
B
x 8
1a
B
1b
B

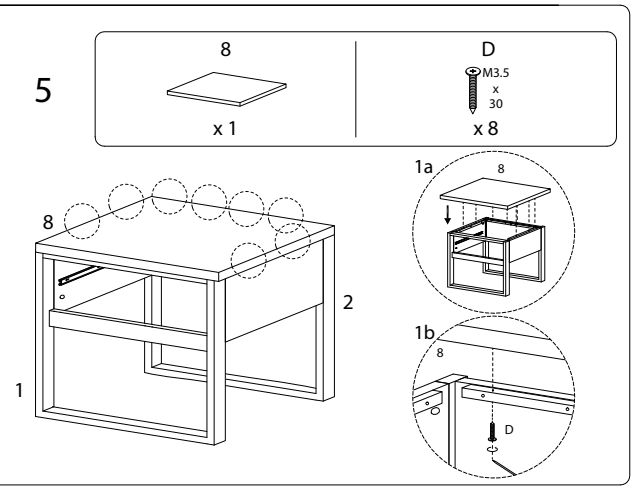
5
8
x 1
D
M3.5
x
30
x 8
8
2
1
1a
8
1b
8
D

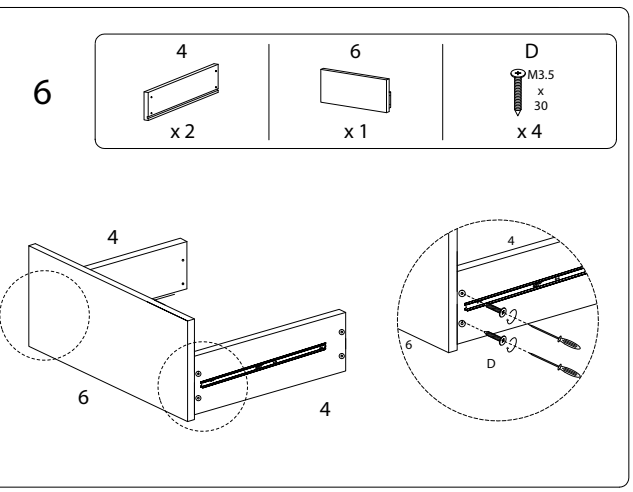
6
4
x 2
6
x 1
D
M3.5
x
30
x 4
4
6
4
4
6
D

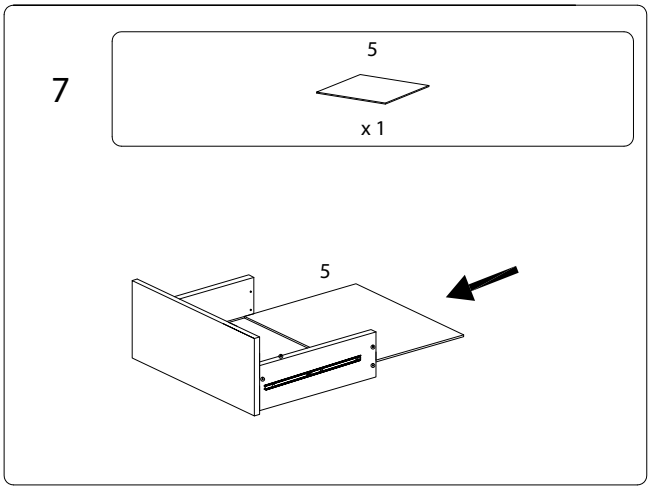
7
5
x 1
5

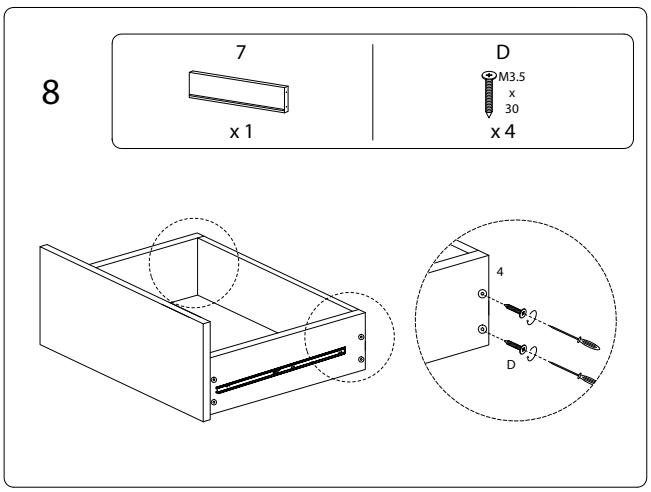
8
7
x 1
D
M3.5
x
30
x 4
4
D

9

