NEWELL

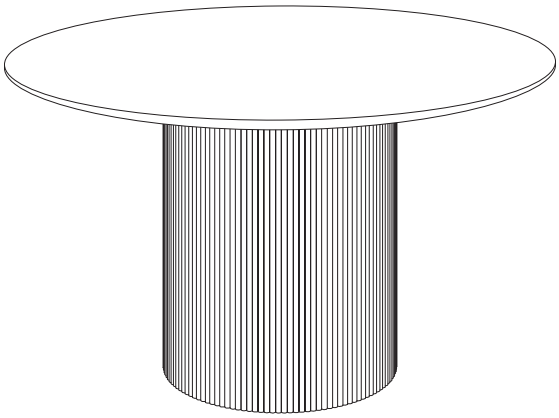

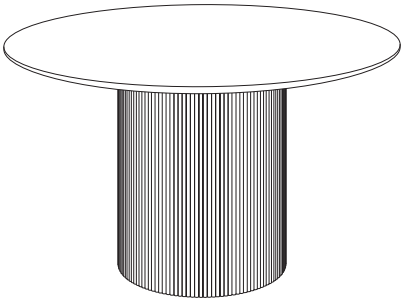

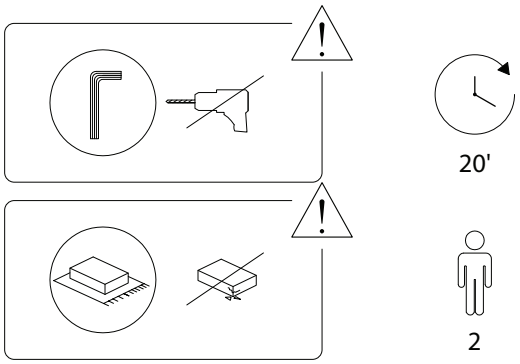

1/3

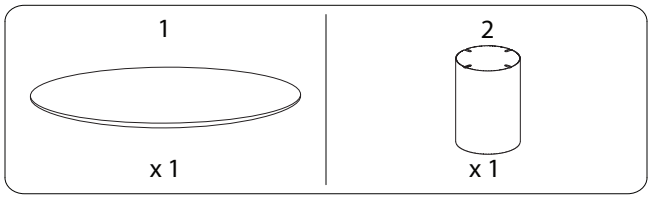

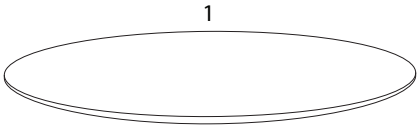

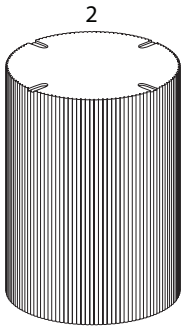

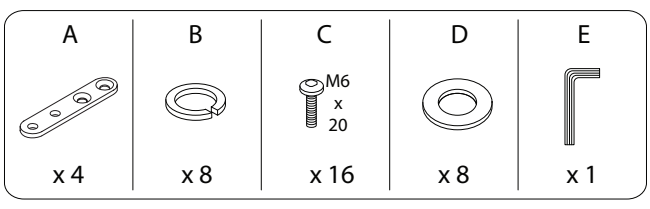

2/3

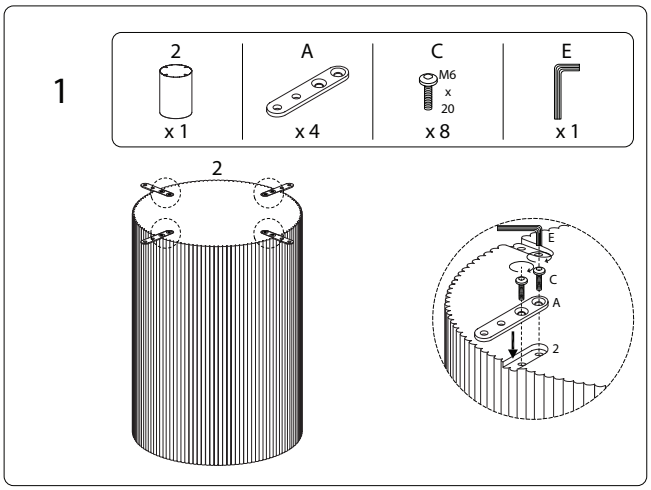

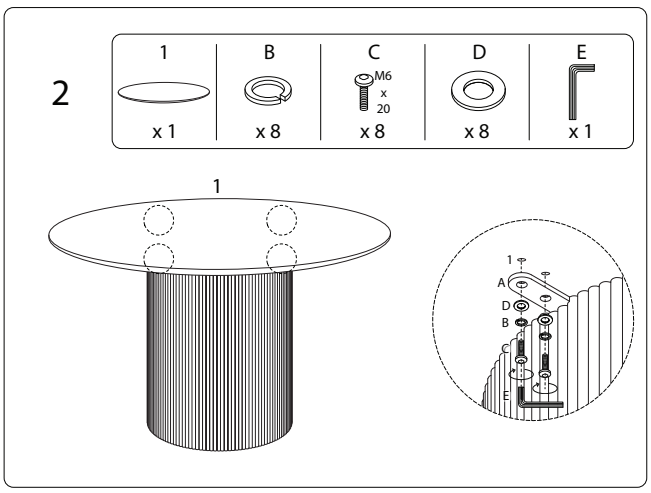

3/3