EDMONTON

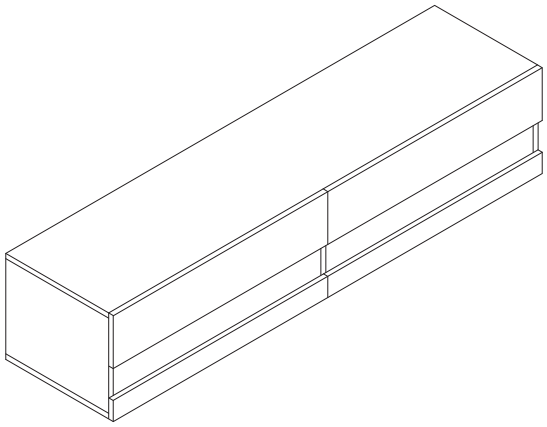

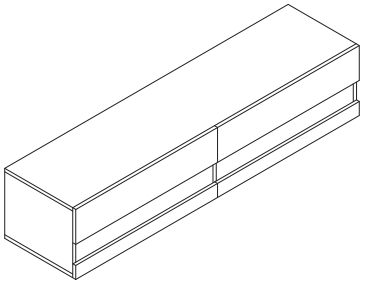

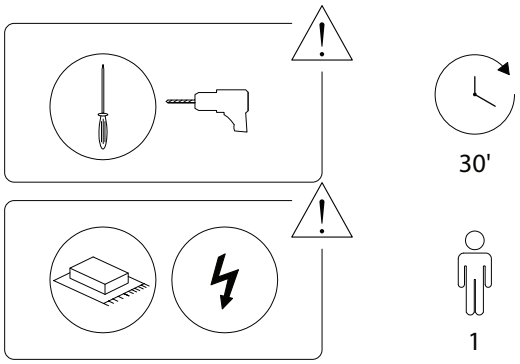

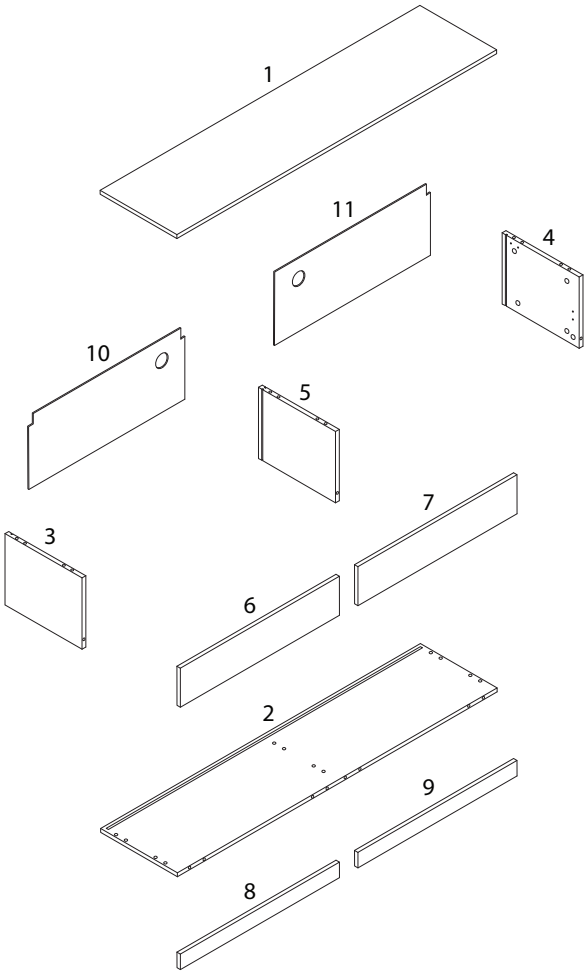

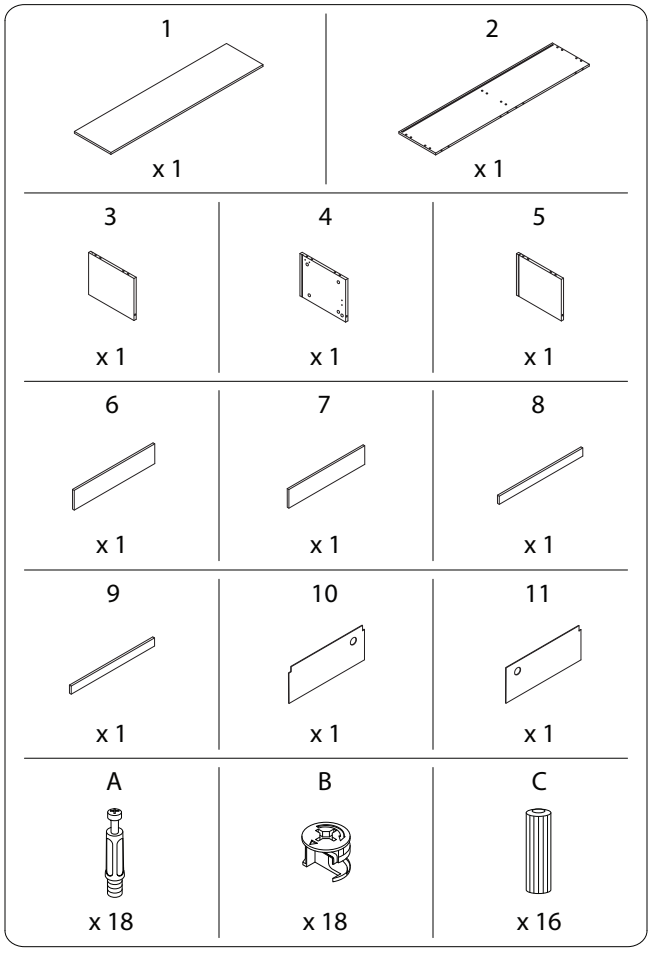

2303/EDMONTON/270126/

D	E1	E2
M3.5 x 16 x 38	x 1	x 1
E3	**F**	**G1**
x 1	x 6	x 3
G2	**H**	**I**
x 3	M3.5 x 30 x 6	x 4

J1	J2	J3	J4
x 2	x 2	x 2	x 8
J5	**J6**	**K**	**L**
x 4	x 1	x 6	M3.5 x 35 x 6

1

1	2	A	C
x 1	x 1	x 12	x 12

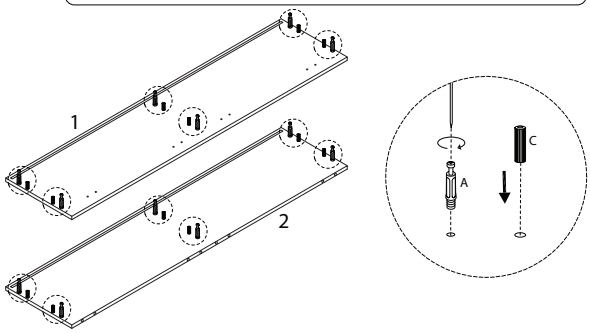

2

3	4	5	B
x 1	x 1	x 1	x 6

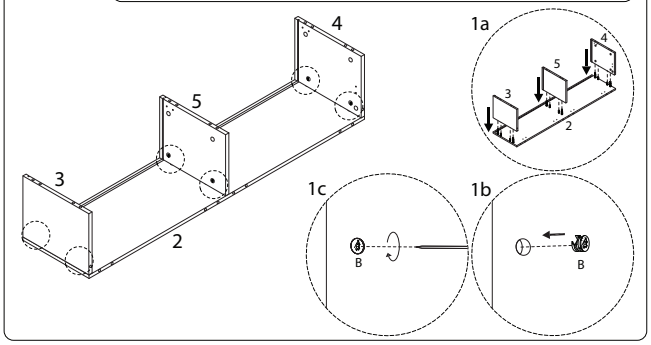

3

10	11
x 1	x 1

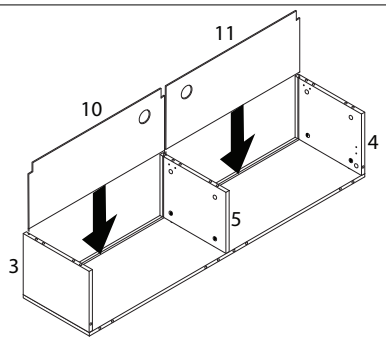

5

G1	H
x 3	M3.5 x 30 x 6

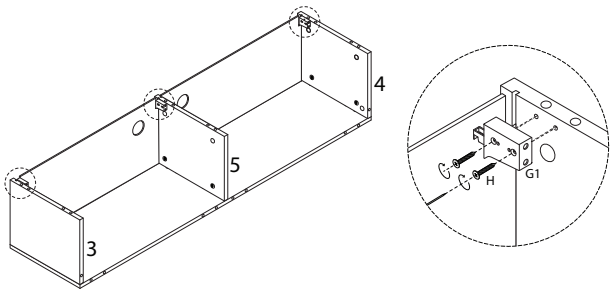

4

D	E1	F
M3.5 x 16 x 6	x 1	x 6

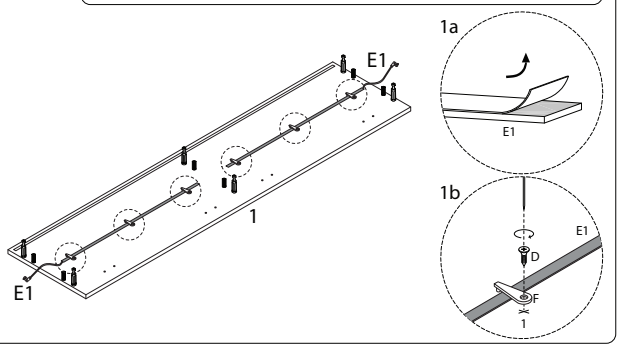

6

B
x 6

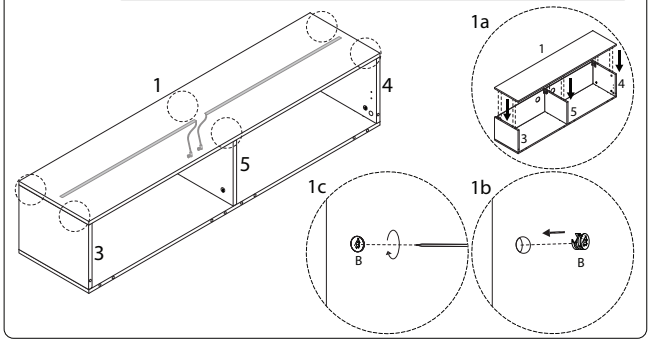

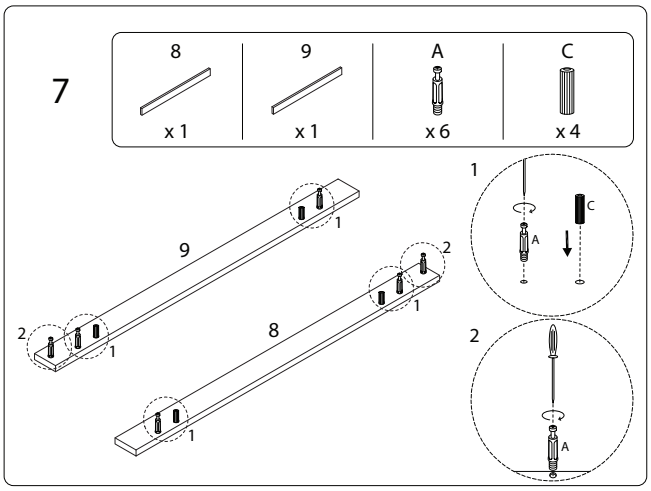
7
8
x 1
9
x 1
A
x 6
C
x 4
9
8
1
2
A
C

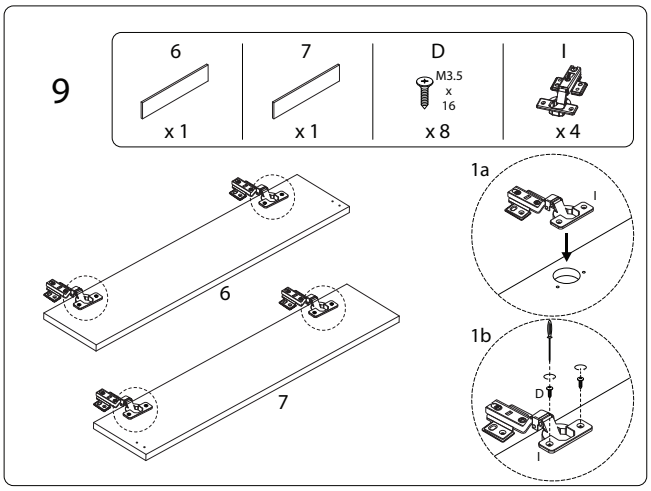
9
6
x 1
7
x 1
D
M3.5 x 16
x 8
I
x 4
6
7
1a
1b
D
I

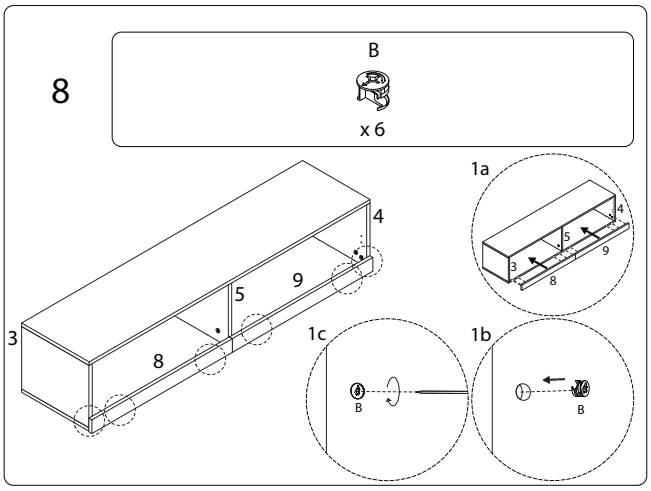
8
B
x 6
1a
1b
1c
3
4
5
8
9
B

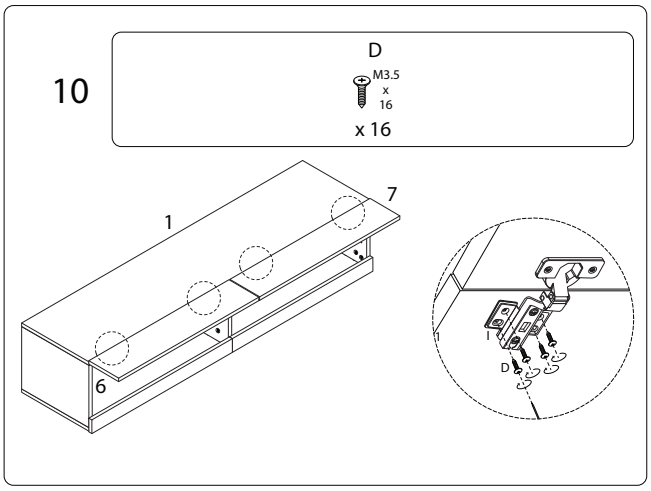
10
D
M3.5 x 16
x 16
1
6
7
I
D

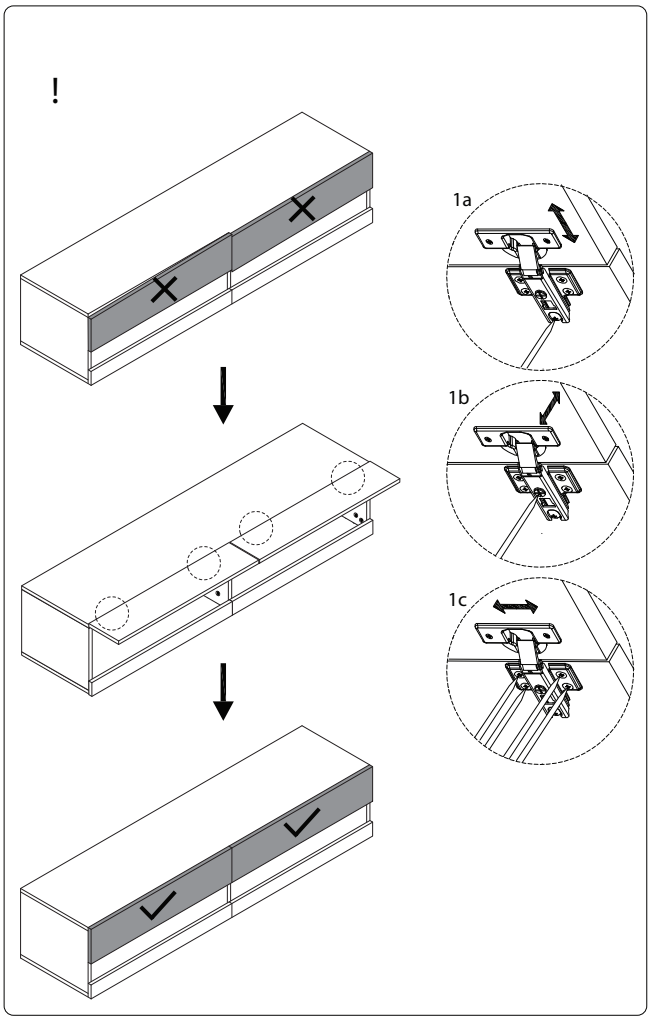
!
1a
1b
1c

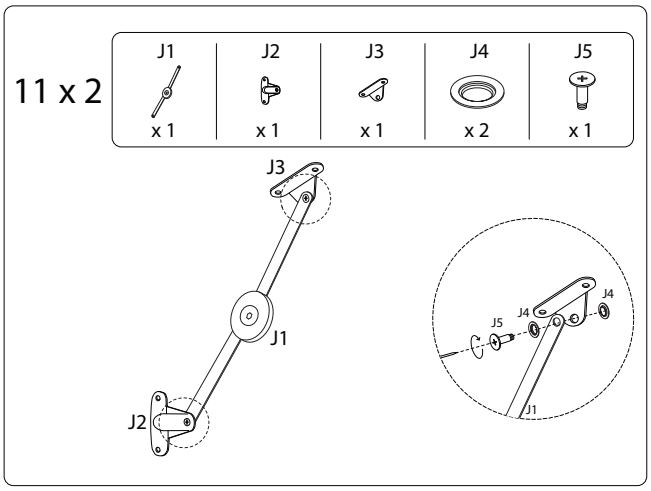
11 x 2
J1
x 1
J2
x 1
J3
x 1
J4
x 2
J5
x 1
J3
J1
J2
J4
J5

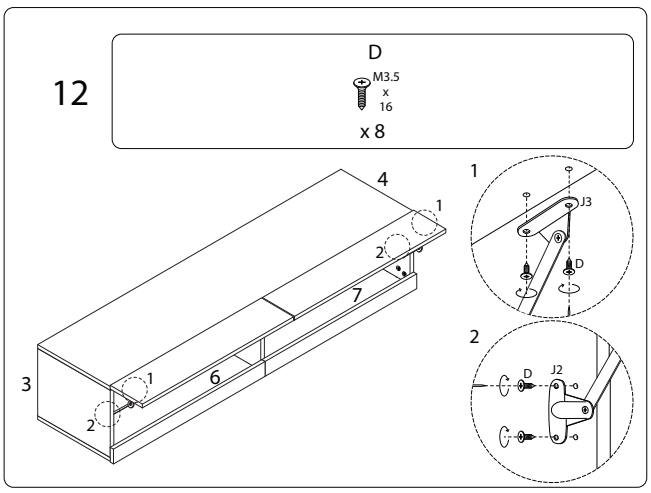
12
D
M3.5 x 16
x 8
1
2
3
4
6
7
J3
D
J2

13

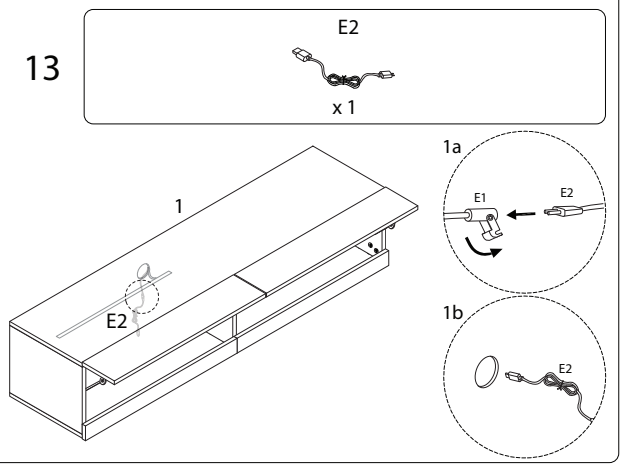
E2
x 1
1
E2
1a
E1
E2
1b
E2

14

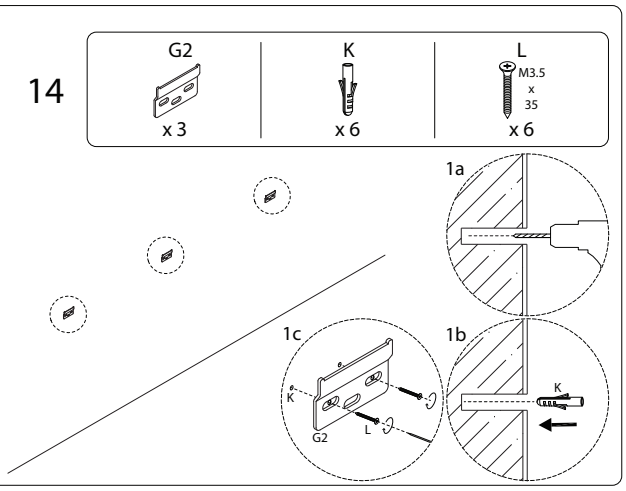
G2
x 3
K
x 6
L
M3.5
x
35
x 6
1a
1c
K
G2
L
1b
K

!

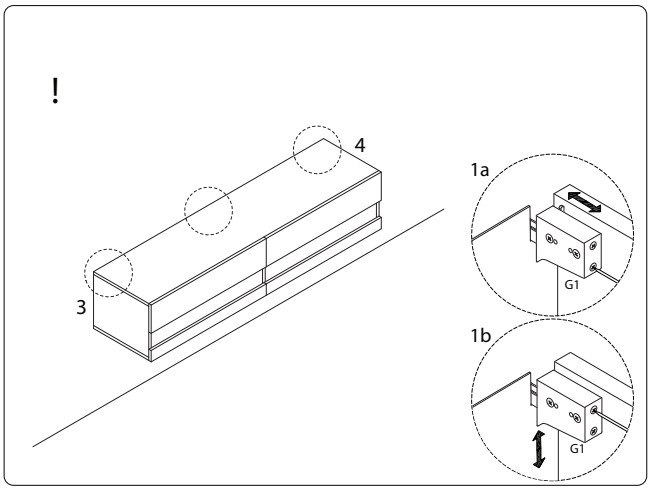
4
3
1a
G1
1b
G1

15

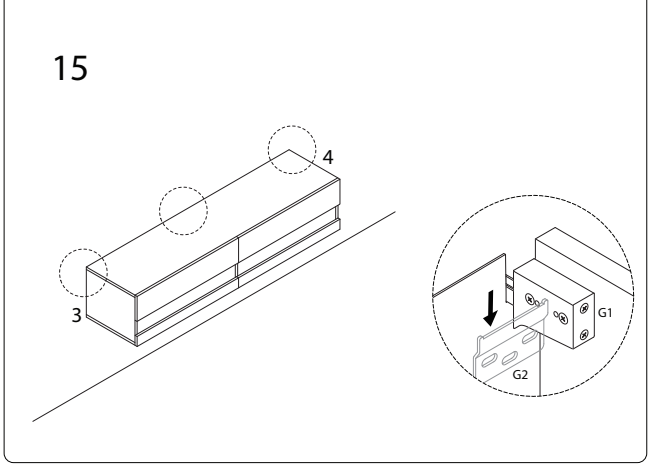
4
3
G1
G2

!

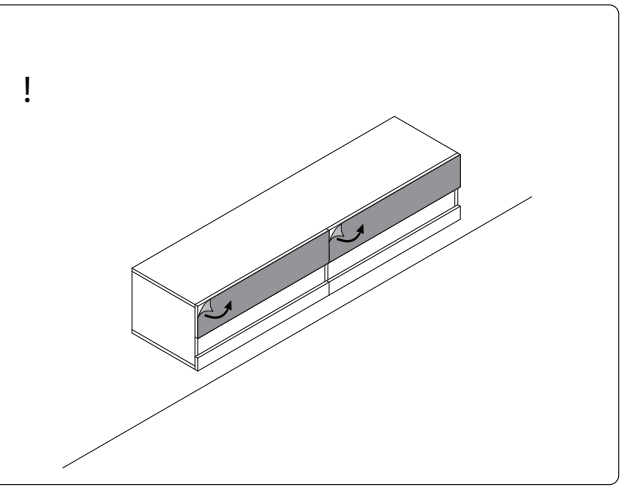

!

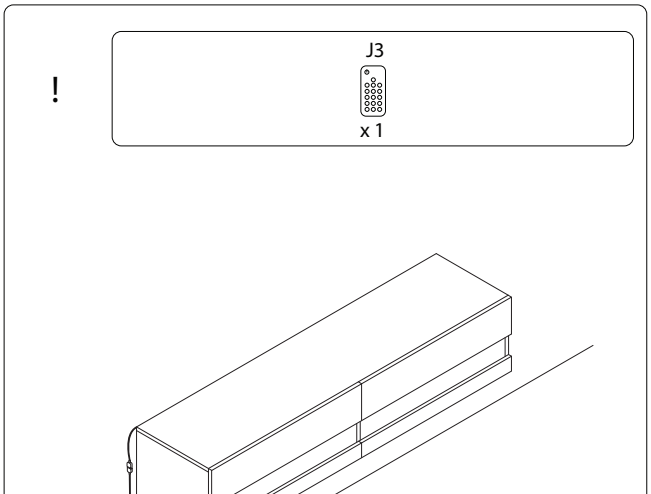
J3
x 1
J3
X
✓
X