

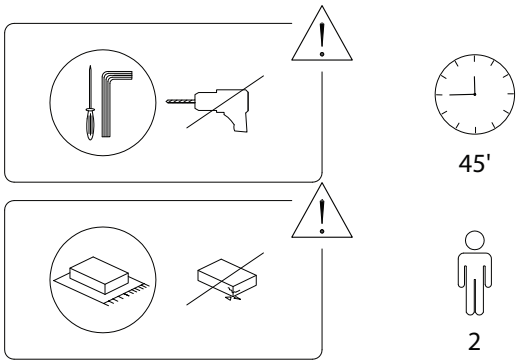

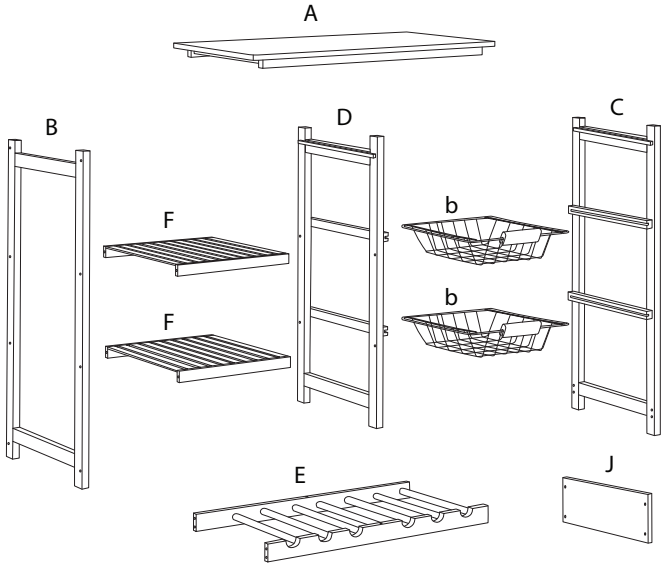

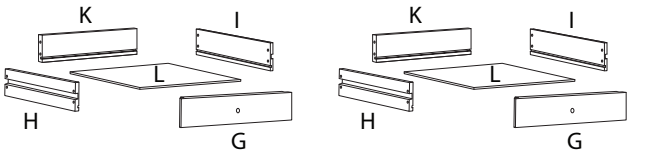

A	B	C	D
x 1	x 1	x 1	x 1

E	F	G	H
x 1	x 2	x 2	x 2
I	J	K	L
x 2	x 1	x 2	x 2
a	b	c	d
x 1	x 2	x 2	x 20
e	f	g	h
x 18	x 6	x 12	x 2
i	j	k	l
x 2	x 2	x 2	x 2

1 x 2

G	H	I	d
x 1	x 1	x 1	x 4

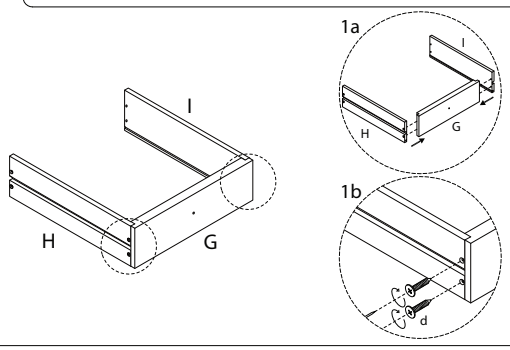

2 x 2

L
x 1

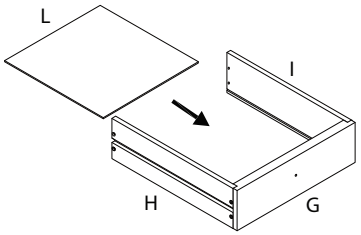

3 x 2

K	d
x 1	x 4

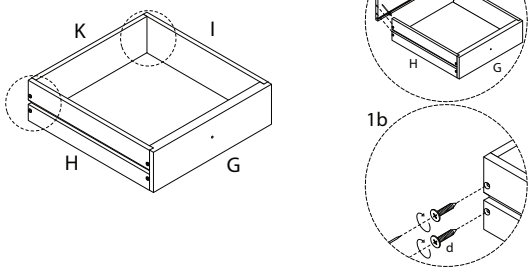

4 x 2

c	l
x 1	x 1

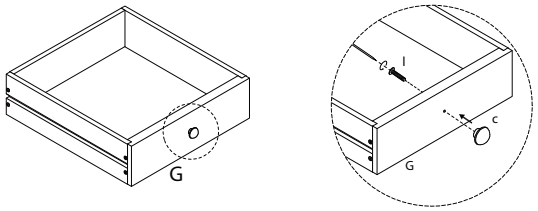

5

A	B	a	e
x 1	x 1	x 1	x 2

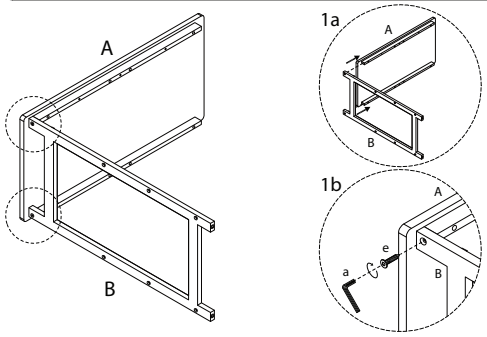

6

F	a	e
x 2	x 1	x 4

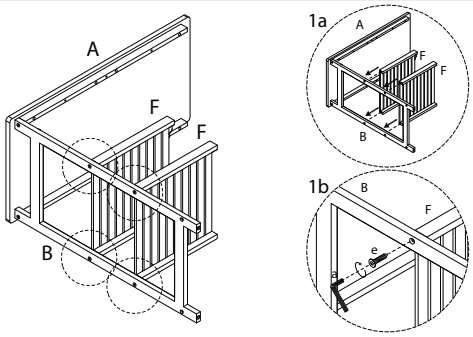

7

j	k
x 2	x 2

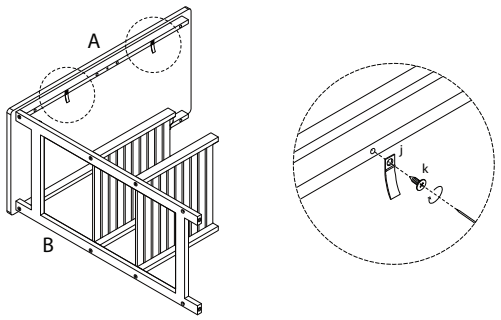

8

D	f
x 1	x 2

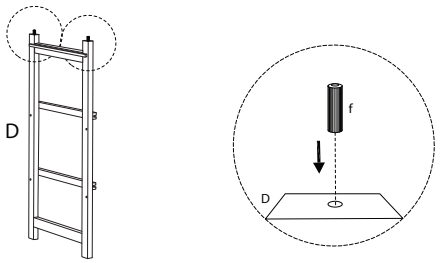

9

a	e
x 1	x 4

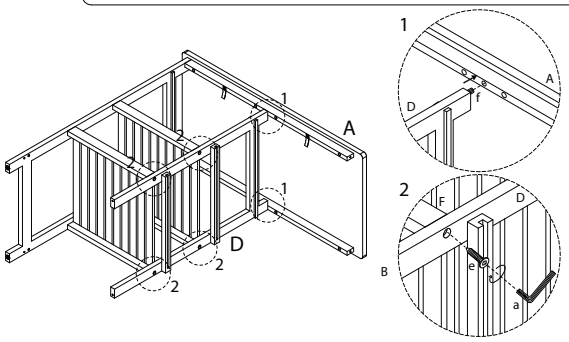

10

E	f
x 1	x 4

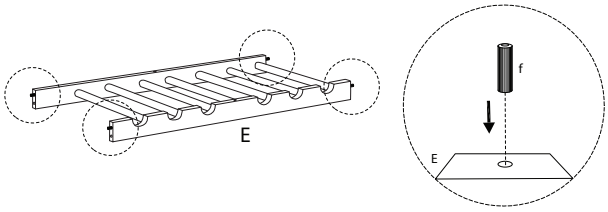

11

a x 1

e M5 x 45 x 4

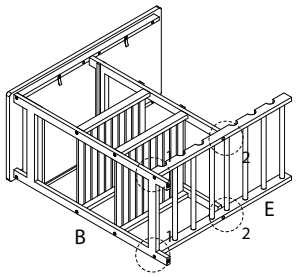

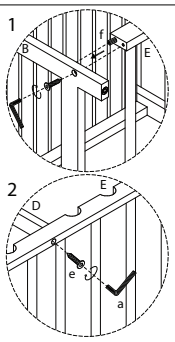

12

C x 1

a x 1

e M5 x 45 x 4

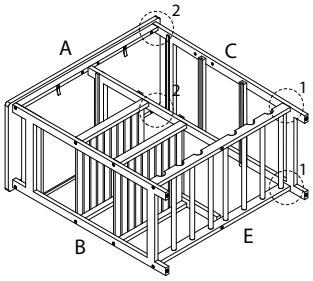

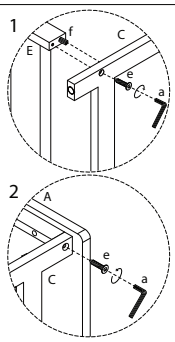

13

J x 1

d M3 x 25 x 4

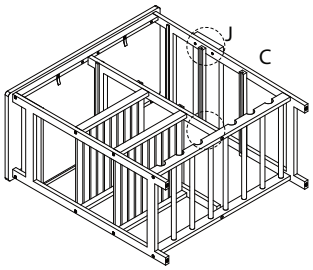

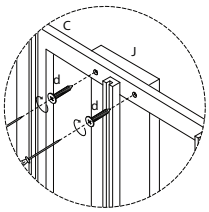

14

h x 2

i x 2

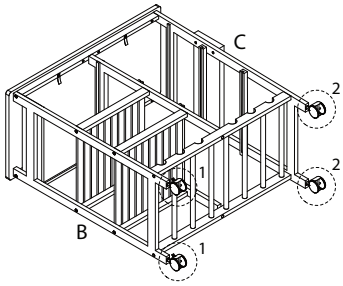

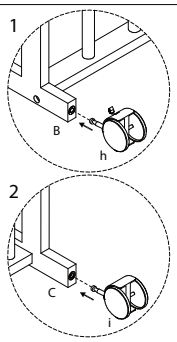

15



16

b x 2

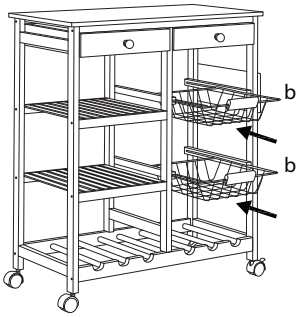

17

g x 12

