GIBSON

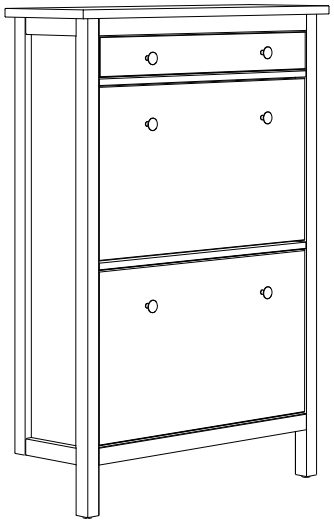

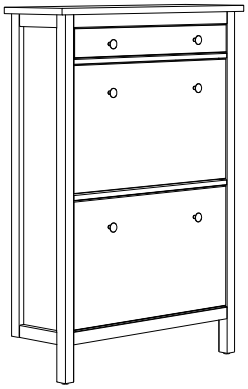

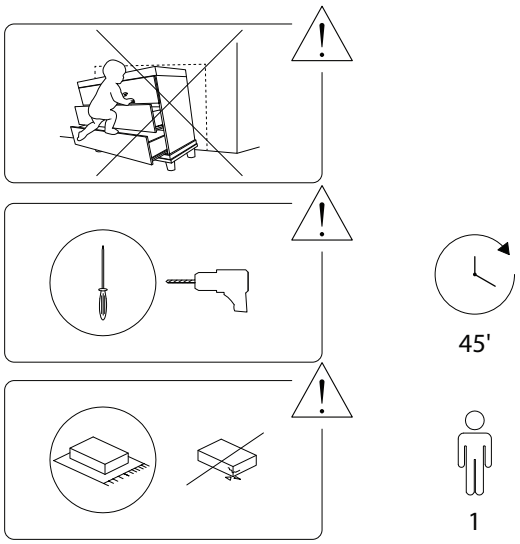

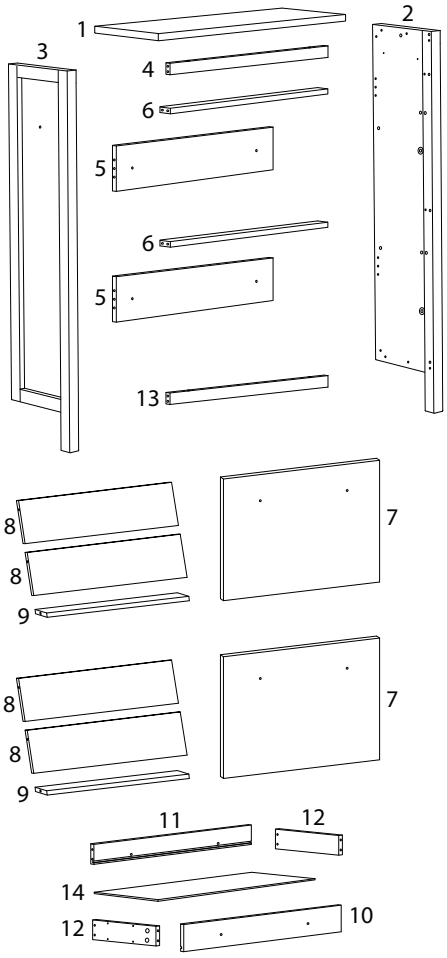

1 x 1	2 x 1	3 x 1
4 x 1	5 x 2	6 x 2
7 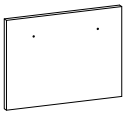 x 2	8 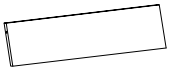 x 4	9 x 2
10 x t	11 x 1	12 x 2
13 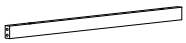 x 1	14 x 1	

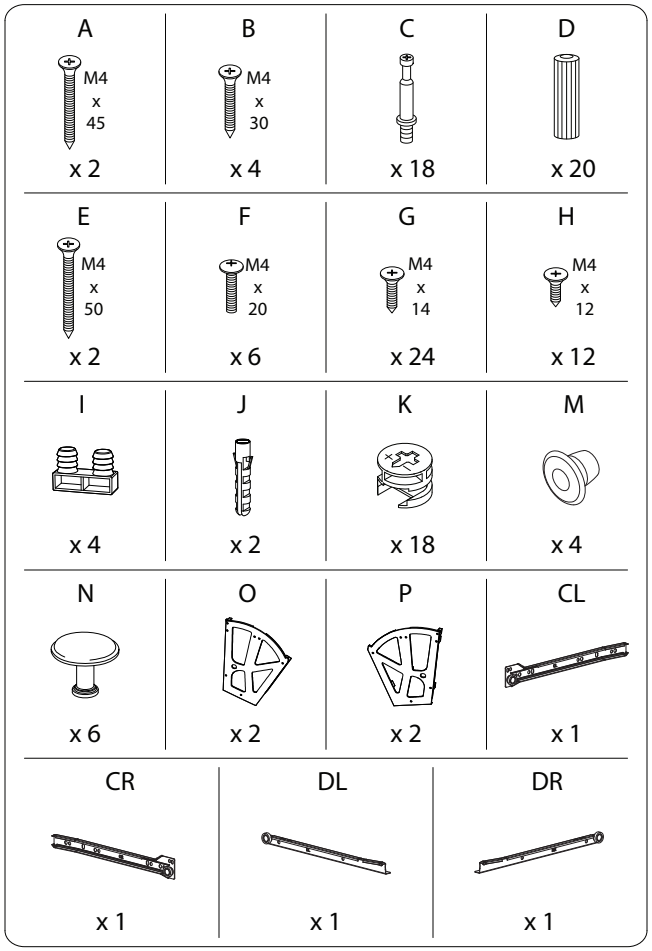
A
M4 x 45
x 2
B
M4 x 30
x 4
C
x 18
D
x 20
E
M4 x 50
x 2
F
M4 x 20
x 6
G
M4 x 14
x 24
H
M4 x 12
x 12
I
x 4
J
x 2
K
x 18
M
x 4
N
x 6
O
x 2
P
x 2
CL
x 1
CR
x 1
DL
x 1
DR
x 1

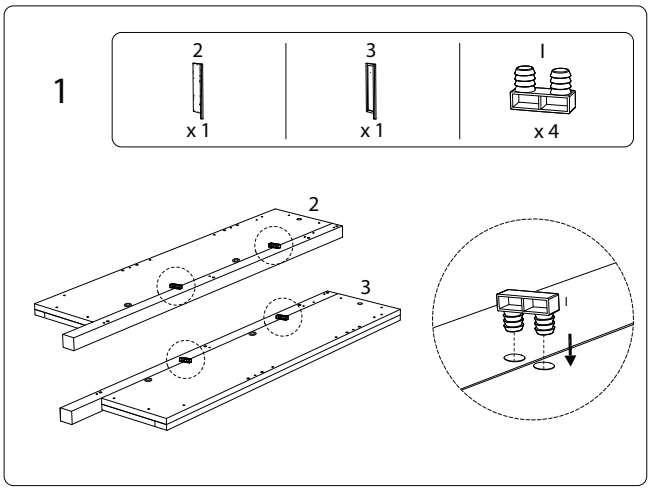
1
2
x 1
3
x 1
I
x 4
2
3
I

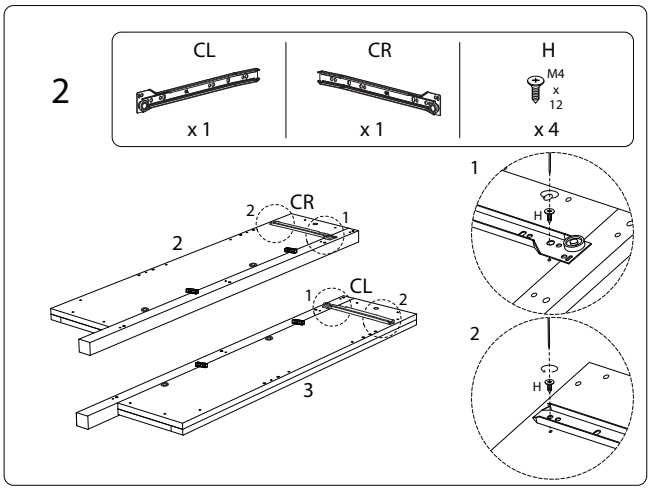
2
CL
x 1
CR
x 1
H
M4 x 12
x 4
2
CR
2
1
CL
1
2
3
1
H
2
H

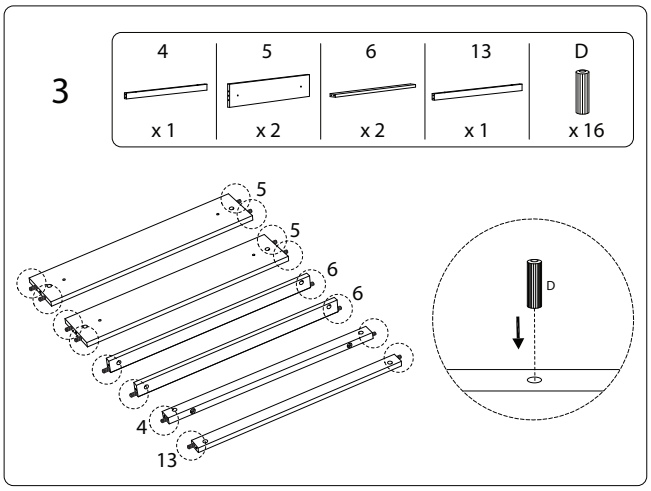
3
4
x 1
5
x 2
6
x 2
13
x 1
D
x 16
5
5
6
6
4
13
D

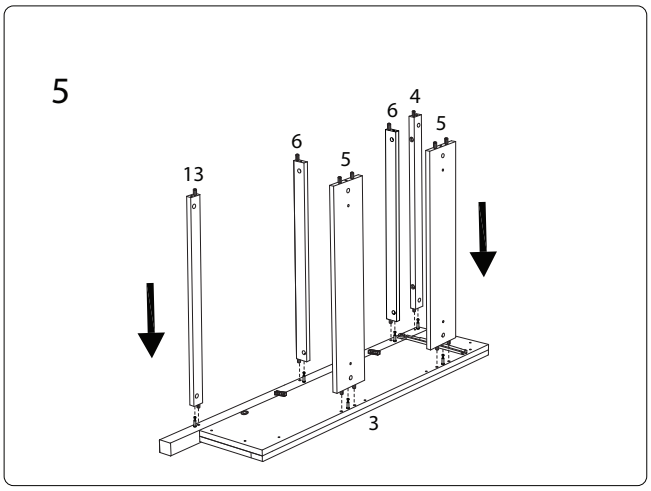
5
13
6
5
6
4
5
3

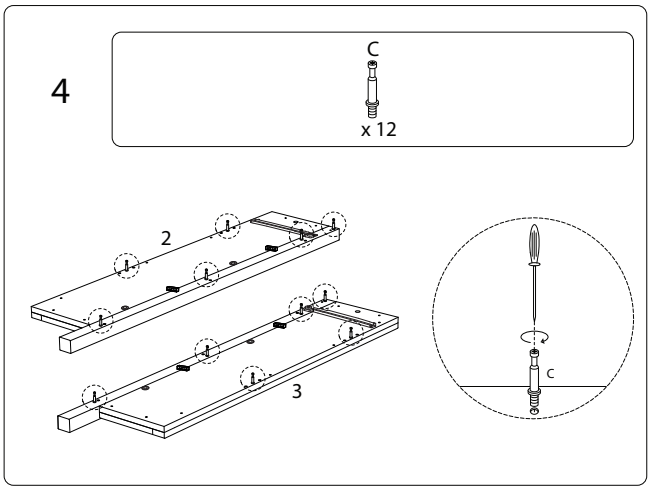
4
C
x 12
2
3
C

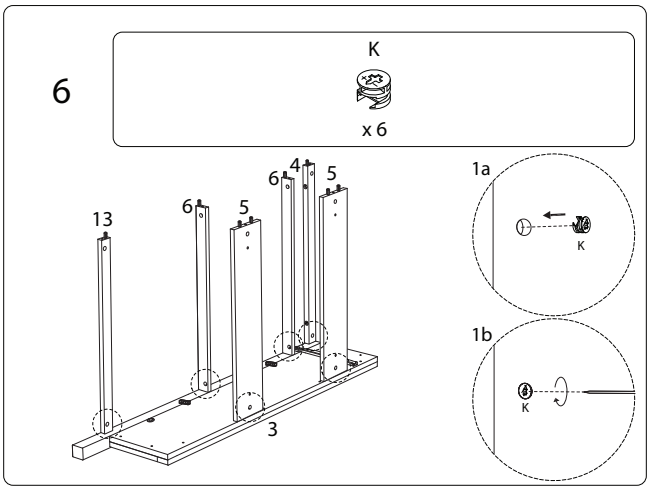
6
K
x 6
13
6
5
6
4
5
3
1a
K
1b
K

7

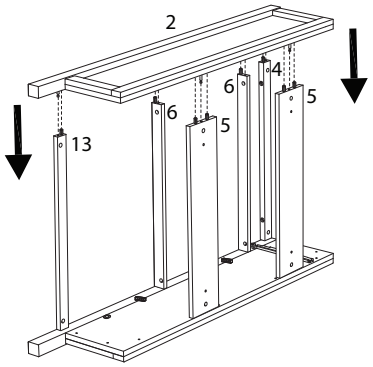

8

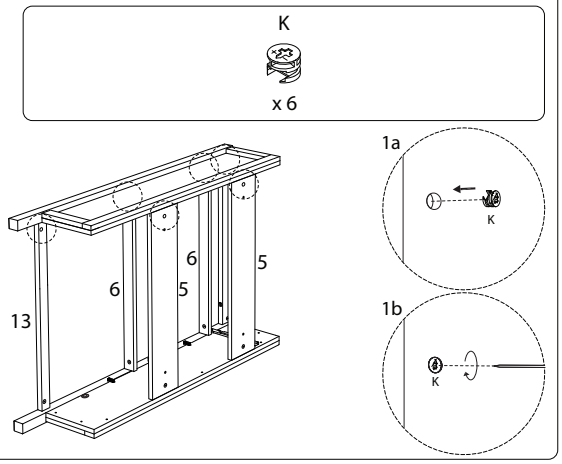

9

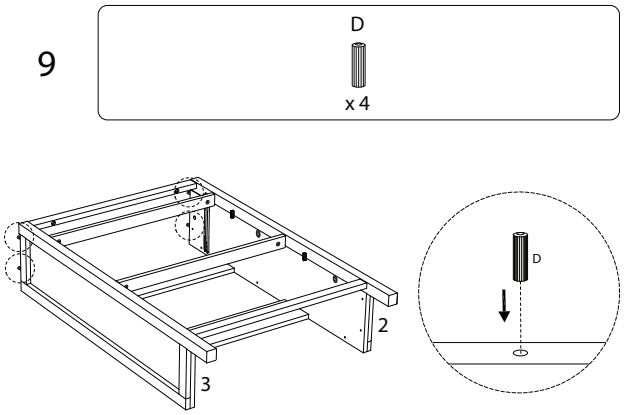

10

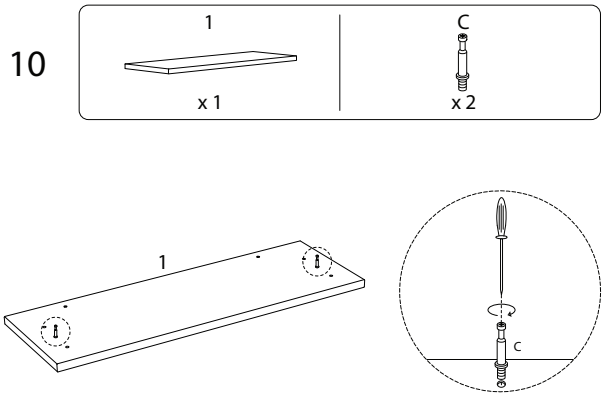

11

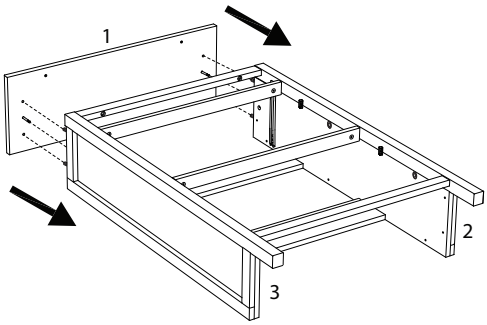

12

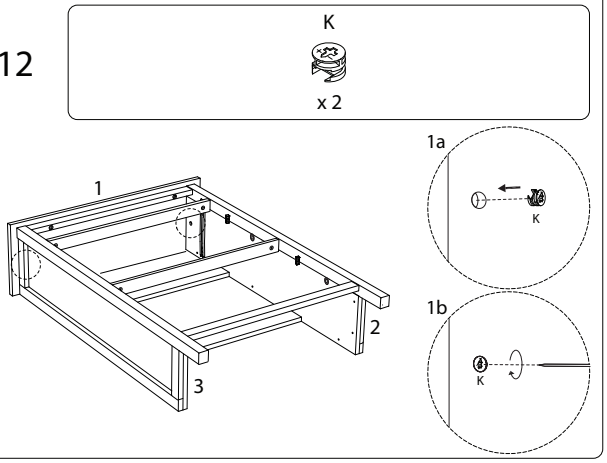

13

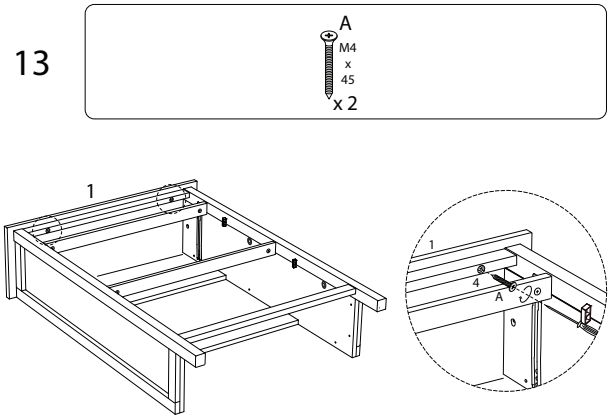

14

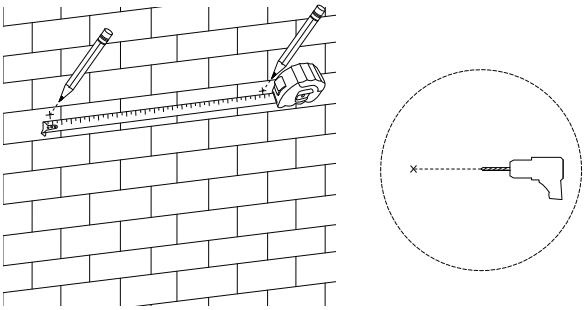

15

E	J
M4 x 50	
x 2	x 2

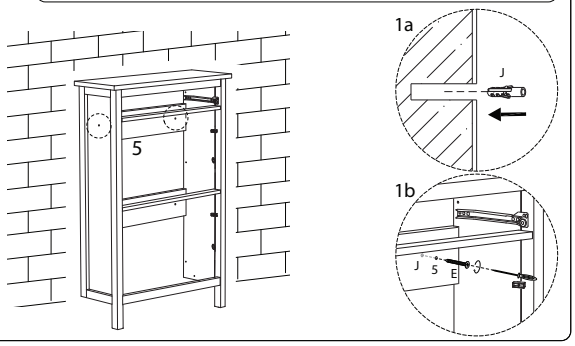

16 x 2

7	G	O	P
	M4 x 14		
x 1	x 6	x 1	x 1

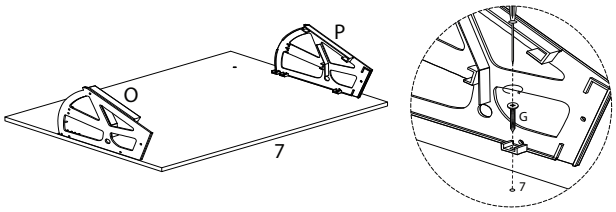

17 x 2

8	9
x 2	x 1

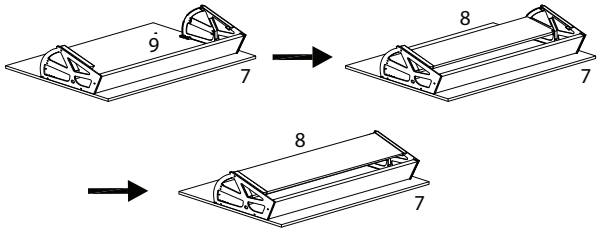

18 x 2

G
M4 x 14
x 6

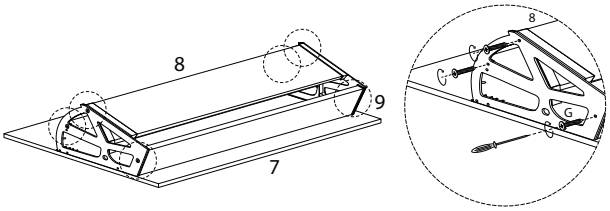

19

H	M
M4 x 12	
x 4	x 4

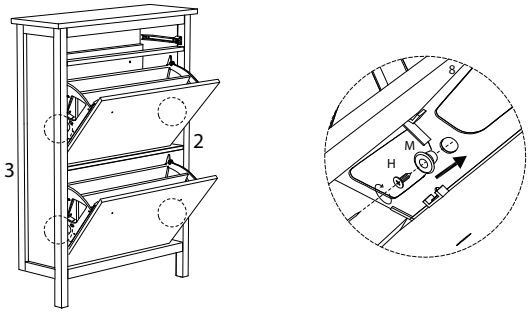

20

F	N
M4 x 20	
x 4	x 4

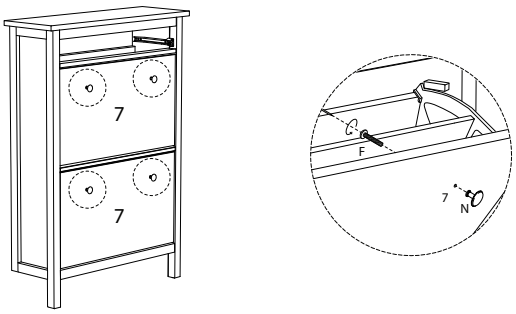

21

C
x 4

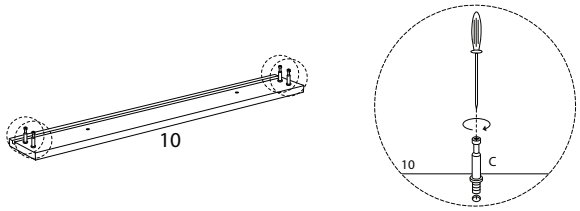

22

12	K
x 2	x 4

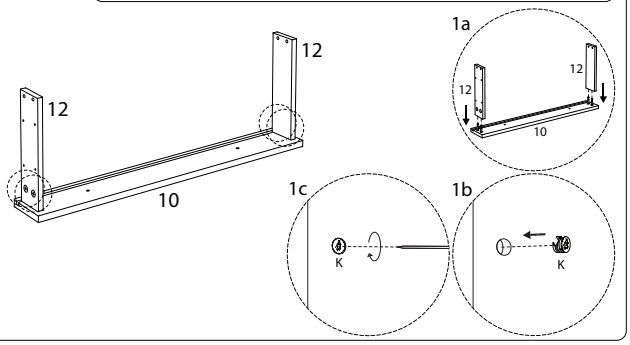

23

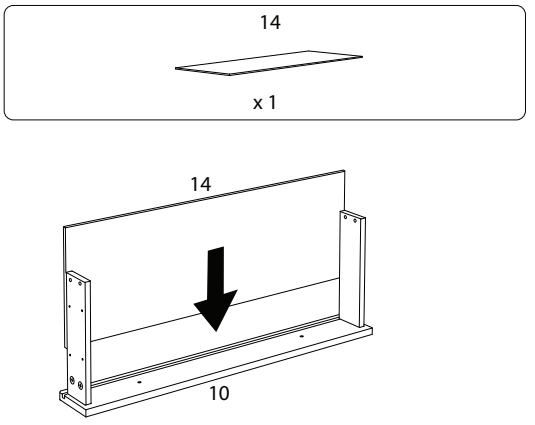
14
x 1
14
10

24

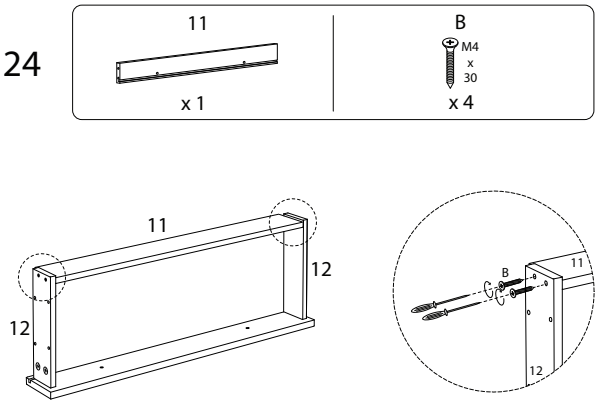
11
x 1
B
M4
x
30
x 4
11
12
12
B
11
12

25

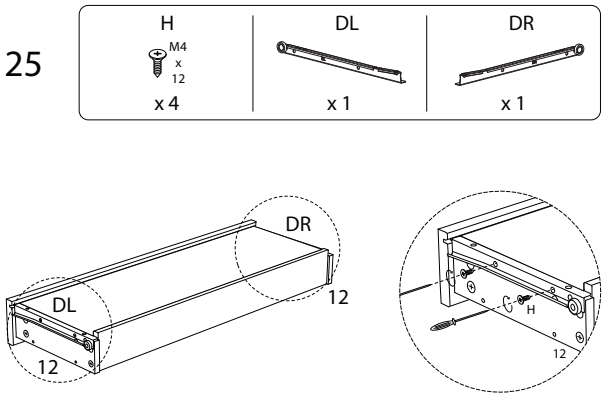
H
M4
x
12
x 4
DL
x 1
DR
x 1
DR
DL
12
12
H
12

26

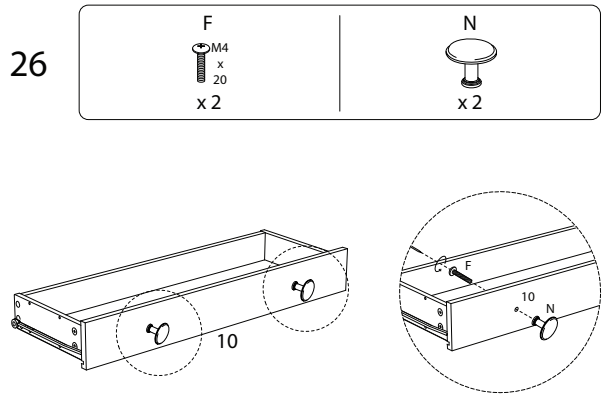
F
M4
x
20
x 2
N
x 2
10
F
10
N
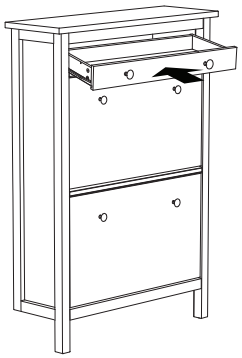
27