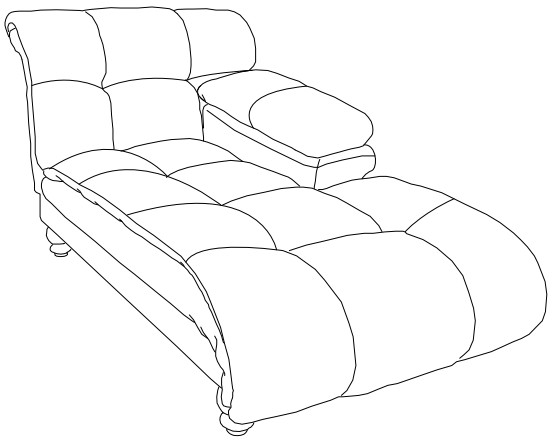

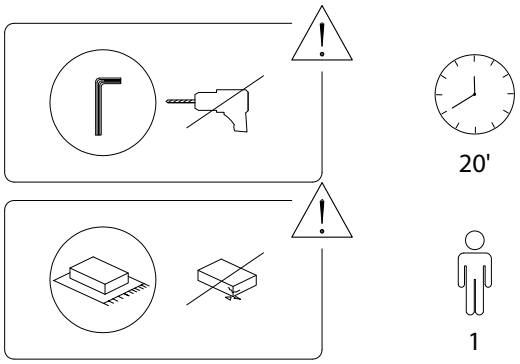
20'
1

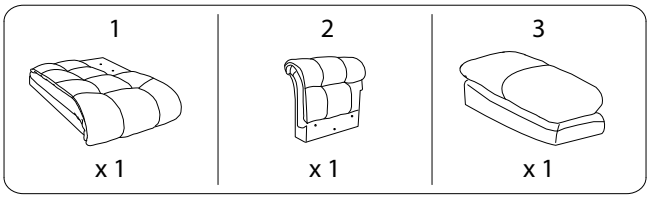
1
x 1
2
x 1
3
x 1

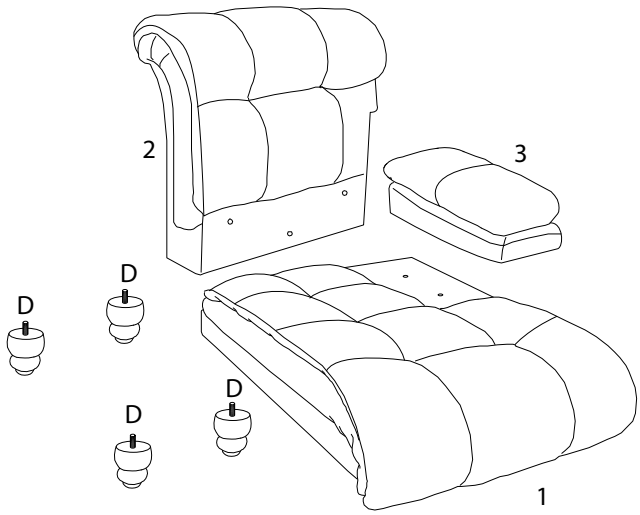
2
3
D
D
D
D
1

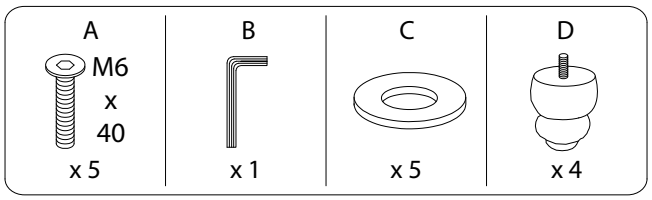
A
M6
x
40
x 5
B
x 1
C
x 5
D
x 4

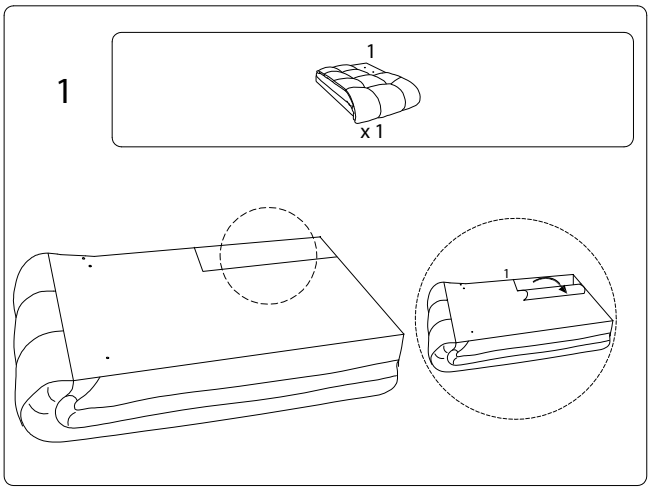
1
1
x 1
1

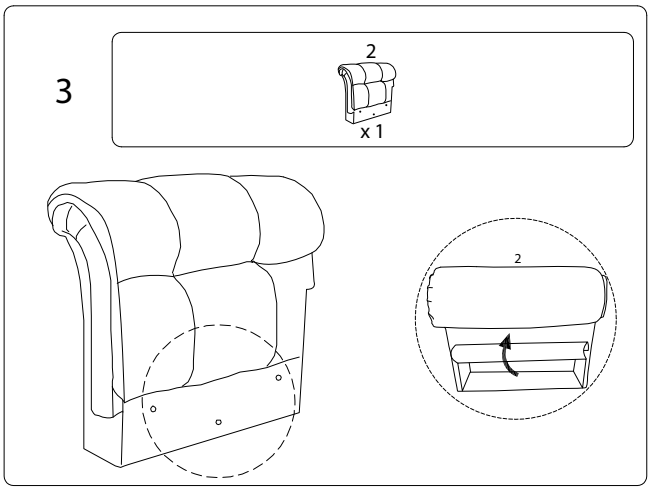
3
2
x 1
2

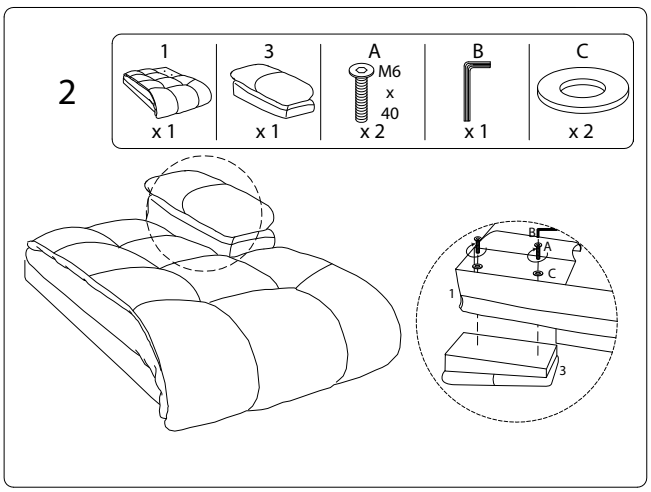
2
1
x 1
3
x 1
A
M6
x
40
x 2
B
x 1
C
x 2
B
A
C
1
3

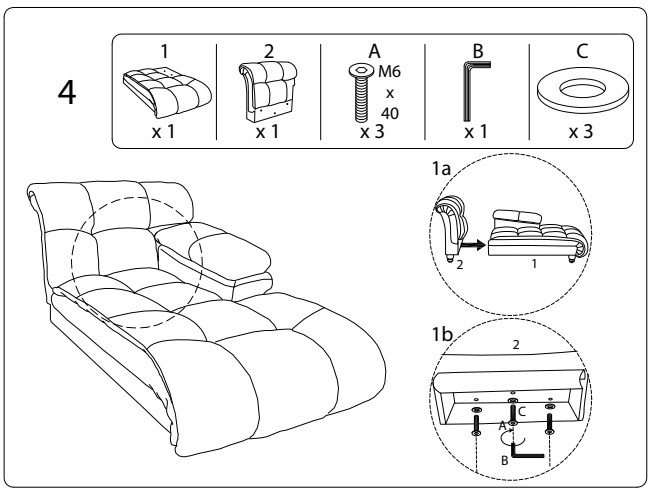
4
1
x 1
2
x 1
A
M6
x
40
x 3
B
x 1
C
x 3
1a
2
1
1b
2
C
A
B

5

