MONTLAUR

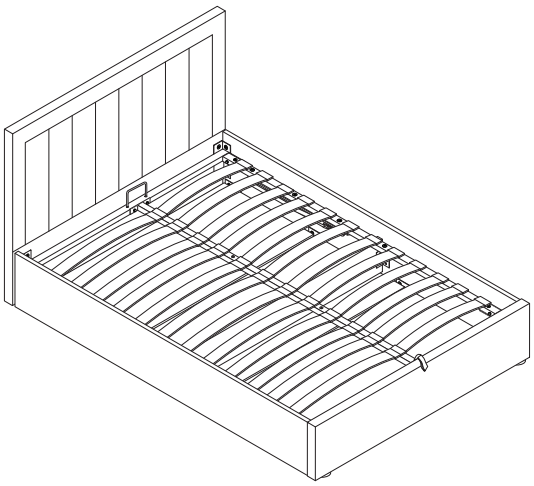

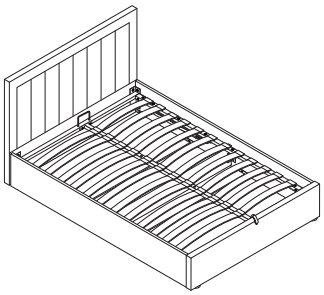

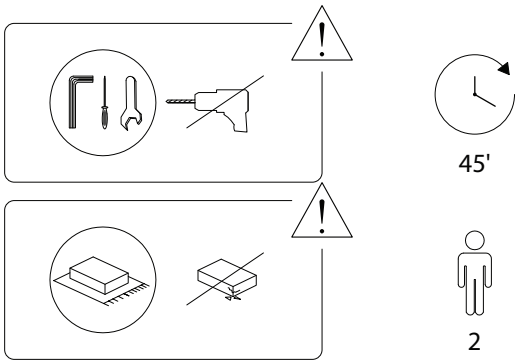

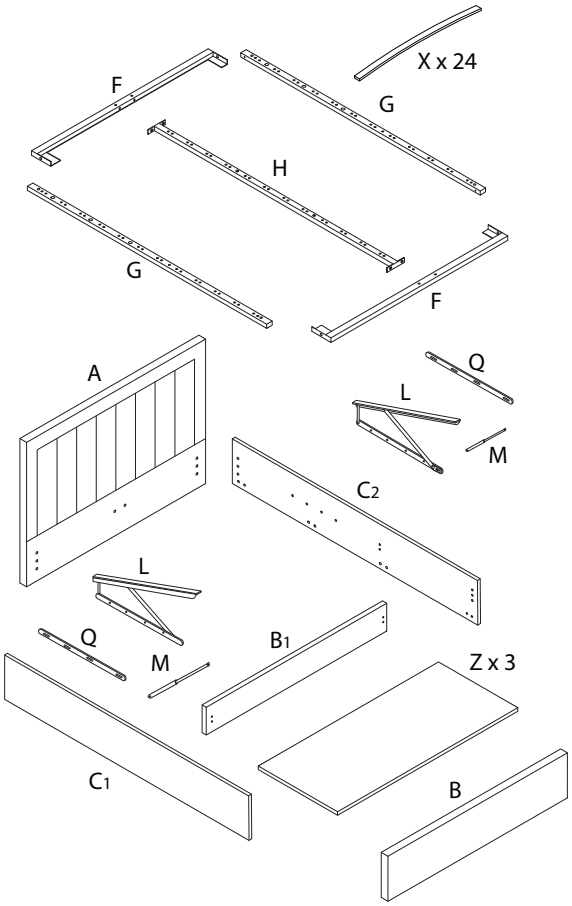

A 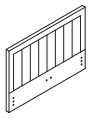 x 1	B 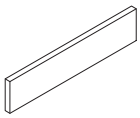 x 1	C1 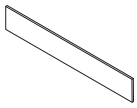 x 1
C2 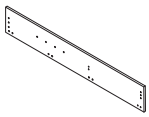 x 1	D x 4	E1 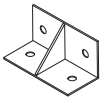 x 2
E2 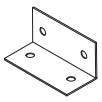 x 10	F 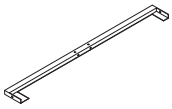 x 2	G 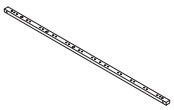 x 2
H 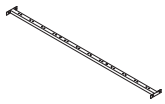 x 1	I M4 x 30 x 3	J M4 x 40 x 4
K 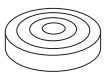 x 7	L x 2	M 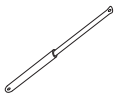 x 2

N x 2	O x 2	P x 1
Q x 2	R M8 x 40 x 20	S M8 x 30 x 20
T M8 x 20 x 40	U x 20	V x 4
W x 24	X x 24	Y x 12
Z x 3	A_1 x 1	B_1 x 1

1

A	B	J	K
x 1	x 1	M4 x 40 x 4	x 4

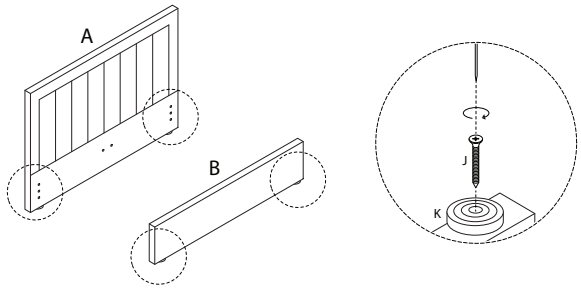

2

C_1	C_2	D	N	S	T
x 1	x 1	x 4	x 1	M8 x 30 x 12	M8 x 20 x 12

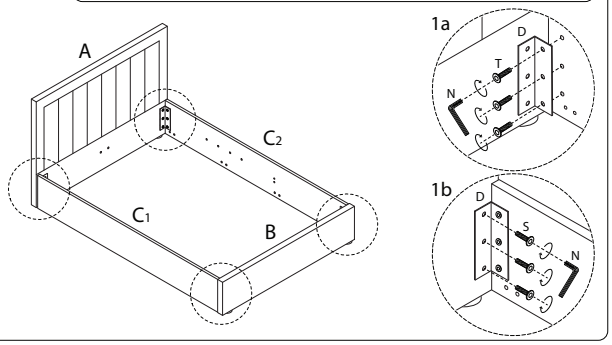

3

E_1	N	T
x 2	x 1	M8 x 20 x 4

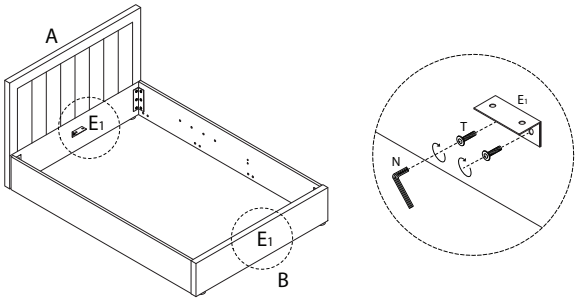

4

E_2	N	T
x 8	x 1	M8 x 20 x 16

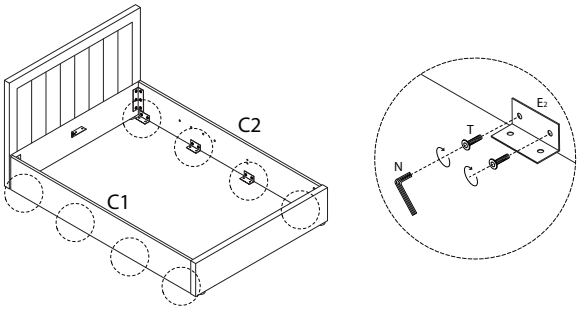

5

F	G	N	O	R	U
x 2	x 2	x 1	x 1	M8 x 40 x 8	x 8

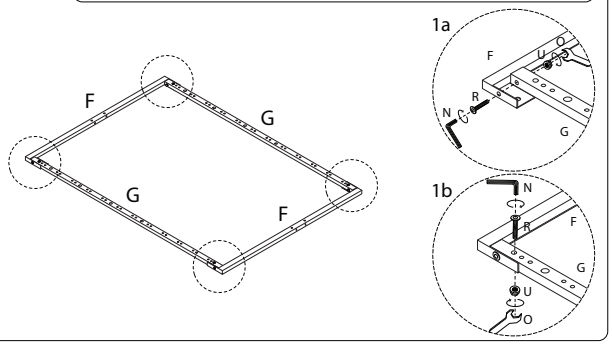

6

H	N	O	R	U
x 1	x 1	x 1	M8 x 40 x 4	x 4

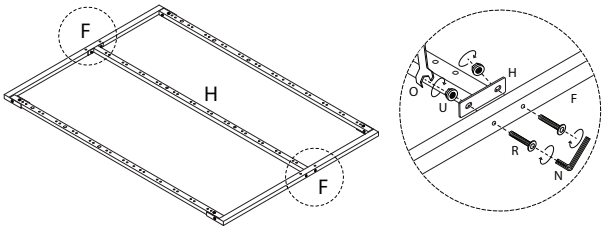

7

Q	L	N	S
x 2	x 2	x 1	M8 x 30 x 8

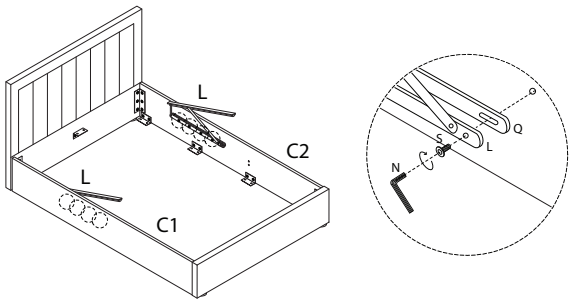

8

M	O	V
x 2	x 1	x 4

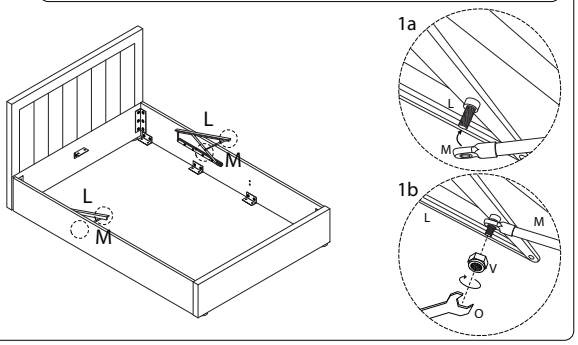

9

N	O	R	U
x 1	x 1	M8 x 40 x 8	x 8

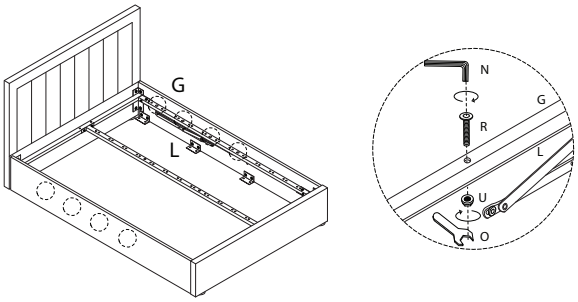

10

P
x 1

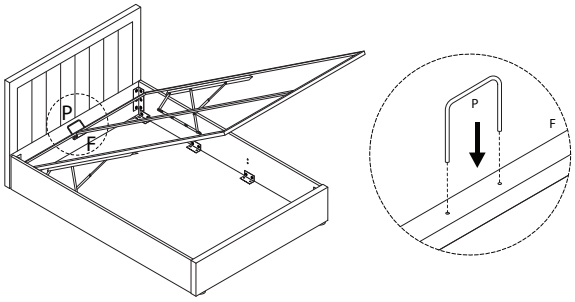

11

A1
x 1

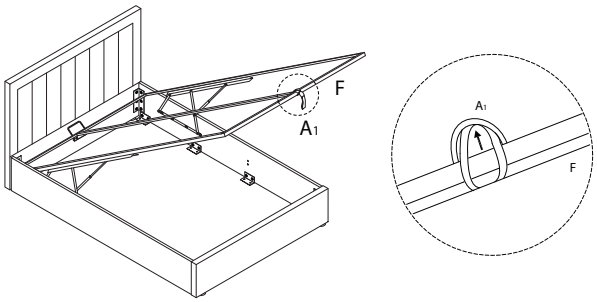

12

I	K	Z
M4 x 30 x 3	x 3	x 3

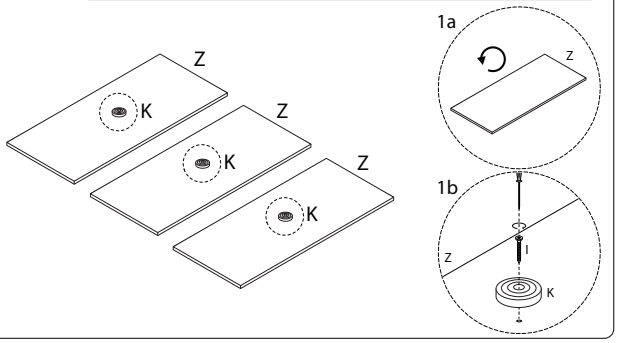

13

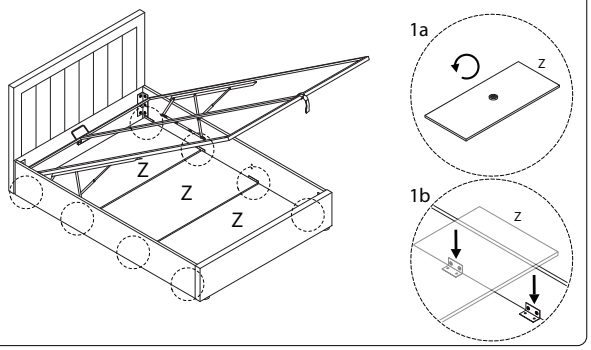

14

E_2	N	T	B_1
x 2	x 1	M8 x 20 x 4	x 1

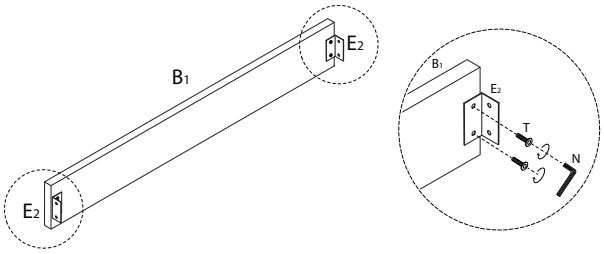

15

T

M8 x 20

x 4

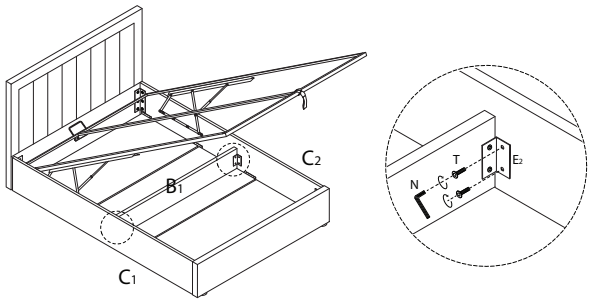

!

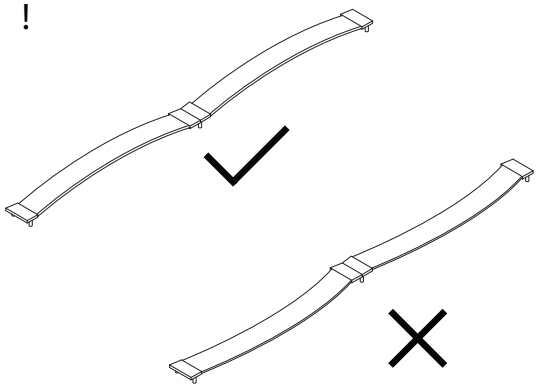

16 x 12

W	X	Y
x 2	x 2	x 1

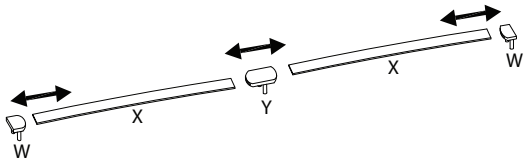

17

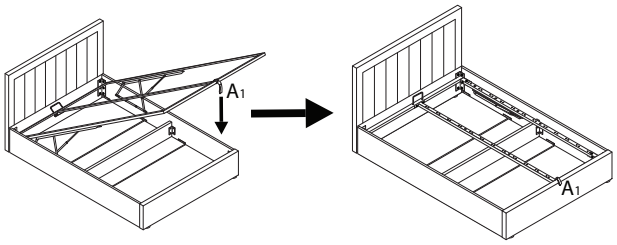
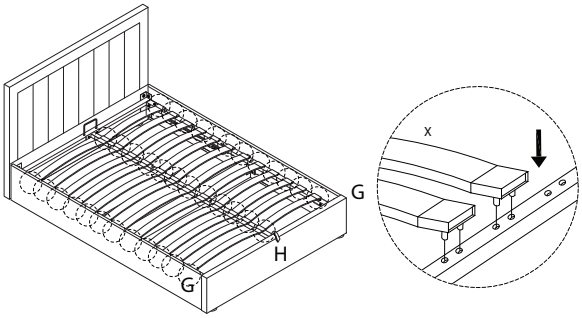
18